SERVICE MANUAL

MODEL: 9WM-110-PW
SERIAL: 5624HG

DATE: August 25, 2015

Electrical Requirements:

Volts:..... 460 VAC
Phase: ..... 3 Ph
Hertz: ..... 60 Hz
Amperage: ..... 41 Amps
Controls Voltage:..... 24 VDC

Air Requirements:

Volume: ..... 6 CFM
Pressure:..... 90 PSI

ADCO Manufacturing

2170 Academy Avenue | Sanger, California 93657-3795
Phone: 559.875.5563 | Fax: 559.875.7665
Web: www.ADCOMFG.com | Email: info@adcomfg.com

Our normal business hours are: 7:00 AM through 3:30 PM (PST) Monday through Friday

We are closed Saturday and Sunday

Chapter 0 – Introduction

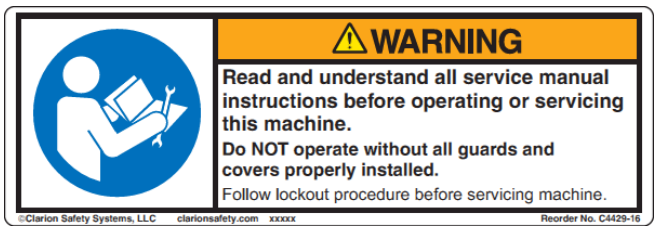

This manual must remain available to operators and maintenance personnel

Preface

This Manual is provided as a guide to the safe installation, maintenance, operation, adjustment, and repair of your ADCO packaging machine. All operators and maintenance personnel should read and understand the instructions in this manual before working on or around the machine.

Your ADCO packaging machine has been designed for safe and easy operation, with attention paid to the Operational Safety Guide in Chapter 1 – Safety. However, unauthorized personnel should not be allowed to operate or work on your machine.

How to use this Manual

ADCO SERVICE MANUAL [WM WRAPAROUND SLEEVER]

Safety	**Installation**	**Maintenance**	**Operation**	**Adjustments**	**Parts Ordering**	**Electrical Documents**	**Component Literature**

The header in the following chapters display which chapter you are viewing. The chapter you are viewing is highlighted in red, in PDF versions of this manual, clicking on the different boxes will take you to that chapter.

Warranty

ADCO Manufacturing warrants that the machinery will be free from defects in material and workmanship for a period of twelve (12) months form the date of delivery at the customers' facility, and this warranty will be limited to the repair and replacement of the defective parts. In no event shall this warranty extend to or obligate ADCO Manufacturing in any way regarding parts or components not actually manufactured by ADCO Manufacturing, are expressly limited to the warranty of the original manufacturer. See ADCO Standard Contract provisions for more details.

Manual Layout

Have all personnel that will be involved with this machine read and understand the information provided in this Service Manual. There are eight Chapters in this manual; including a preface, table of contents and machine specifications.

Chapter 1 - Safety

This section describes the Operational Safety Guide, information on the Safety Labels and Safety Devices, and suggested Lockout / Tagout Procedures. It also contains the Material Safety Data Sheets for all of the known chemicals in the machine.

Chapter 2 - Installation

Contains all information regarding moving and positioning the machine prior to start-up, and contains the Floor Plan and any additional installation procedures.

Chapter 3 – Maintenance

Contains Cleaning Suggestions, the Preventative Maintenance Schedule, Lube Point Map(s), extra guides and suggestions for maintenance, and a Troubleshooting Guide (when available).

Chapter 4 – Operation

Contains the Start-Up, Shut-Down, and Fault Recovery Procedures. It also describes the Operation, Controls, Sensors and other information needed to operate the Machine.

Chapter 5 – Adjustments

Contains the Machine Adjustment Setting, HMI Factory Settings, and other Settings. It also contains descriptions of the Various Sections of the machine, a Changeover Sequence and Procedure, and Parts needed to quickly changeover the machine. There are Additional Adjustments for zeroing machine and miscellaneous procedures that are not needed but listed for the customer's convenience.

Chapter 6 – Parts Ordering

Contains the Parts Ordering Procedure, and additional reassembly guides. It also contains the Spare Parts List, Fabricated Parts List, Purchase Parts List, and Assembly Drawings used in ordering parts for the machine.

Chapter 7 – Electrical Documents

Contains the Electrical Schematic, Pneumatic Schematic, and other settings for miscellaneous components of the machine, such as the Variable Frequency Drive (VFD) Parameters for the VFD Drives.

Chapter 8 – Component Literature

Contains the service and maintenance literature for the third party components used on this machine.

If you need additional information about your machine that cannot be found in this Service manual, please contact:

ADCO Manufacturing's Application Engineering Department
170 Academy Avenue | Sanger, California 93657-3795
Phone: 559.875.5563 | Fax: 559.875.7665
Web: www.ADCOMFG.com | Email: info@adcomfg.com

Is it the Machinery or the Cartons?

WHAT EFFECT DOES AGE HAVE ON FOLDING CARTON PERFORMANCE[1]?

Flat carton blanks and pre-glued sleeve cartons, that are run over vertical or horizontal cartoning machinery, carton forming and/or closing machines, new or old, from the cheapest to the "Cadillac" of the line, at one time or another will have problems in setting up, erecting, forming, or closing cartons on a consistent basis.

Normally, the first few runs will go well, then all of a sudden there are problems. It's the same machine that ran well when it was first installed, the adhesive hasn't been changed, and you are still purchasing your cartons from the same company.

Paper Industry Instruments, an independent group out of Ohio has conducted numerous studies regarding Carton Opening Force. This is the force required to open (erect), fold or close, and glue a flap on a chip board carton.

It has been found that cartons that have aged (stored for a period of time) require considerably more opening force than those more recently manufactured. It was found that as much as three (3) times the opening force is required to open cartons after sitting for 90 days. Naturally, various outside influences may also affect this data such as; temperature, humidity, board weight, density, coatings etc....

The age of "recycled" carton board stock is also upon us, this is not going to help the situation at all. It is becoming more important that companies attempt to cycle their carton inventory as fast as possible. If possible companies should minimize their inventory as fast as possible, utilizing the "First-In, First-Out" concept.

Increased line and cartoning speeds may only add to your problems. Naturally, increased speeds mean "shorter" opening and/or folding times, which are more effected by the Carton Opening Force.

It is often difficult to recognize the "real" [1]cause of your machinery problems, remember, be objective and consider ALL possibilities.

[1] Paper Industry Instruments Group, 4212 Lee Road, Cleveland, OH. Attn: Mr. William Schoenberg, President.

Chapter 1 – Safety

This Chapter of the Service Manual covers all of the safety aspects of the manual, including the safety labels, safety devices, and safety switches. Bypassing any part of this machine's safety equipment, including modifying or removing the machine guards, or bypassing the safety switches attached to any of the machines guards voids the machines warranty. Later in this chapter, examples of the safety equipment attached to this machine will be shown.

Table of Contents

Chapter 1 – Safety 1-1

Operational Safety Guide 1-2

Machine Safety Action Words 1-3

Safety Labels 1-4

Personnel Safety Devices 1-9

Lockout / Tagout Procedure 1-10

Lockout / Tagout Points 1-11

Material Safety Data Sheets 1-12

The Employer is responsible to provide adequate supervision to determine that safe work methods are used. The included Operational Safety Guide (Page 1-2) is provided to help create a safe work environment.

The Employer is also responsible to establish and follow a program of periodic and regular inspection of the machine to ensure that all parts, auxiliary equipment, and safe guards are in a safe operating condition and adjustment.

Operational Safety Guide

The Operational Safety Guide is supplied to employers for recommended additions to standard operating procedures in regards to safe operation of this machine. Employers are responsible for giving proper training on operation and safe operating techniques to their employees.

The recommended safety guidelines include:

1. Follow the employer's safety program to ensure compliance with applicable safety regulations.
2. Read and understand this Service Manual and including understanding all of safety labels before operating this machine.
3. Only a trained person is to be permitted to operate this machine. Training must include instruction in operating under normal conditions and how to act under emergency conditions.
4. This machine is to be serviced only by trained and authorized personnel. It is recommended that personnel follow Lock Out / Tag Out procedures (LOTO) before servicing any Dynamic or Electric Components of this machine.
5. Periodically, walk around the machine and check that all guards are in their place, report the missing guard to a supervisor immediately.
6. Do not reach into the machine until all movement has come to a stop.
7. Use care when servicing any part of the hot glue system, only trained employees should service the hot glue system. Read the glue system service manual and wear the Proper Protective Equipment when servicing.
8. Do not wear loose clothing or jewelry when operating or servicing this machine.
9. Personnel should be made aware and stay clear of machines with auto-restart to avoid possible injury.
10. Never "Lock Down" a torque limiting clutch to prevent it from kicking out, or personal injury and / or irreparable damage will result.
11. Make all personnel aware when a Guard Bypass switch is activated, and keep all personnel aware when jogging the machines when the Guard Bypass on.
12. Never remove machine safety labels from or behind guarding or other machine surfaces.
13. Electrical cabinets and junction boxes should not be opened unless power has been disconnected or locked out, unless trained and authorized personnel are performing the work.
14. Pneumatic components, manifolds and air lines should not be disconnected unless the Filter-Regulator-Lubricator has been locked out.
15. Do not leave any extra tools, materials, or objects in the machine when operating the machine.
16. Do not use this machine for a purpose other than it was designed for.
17. Do not exceed the speed for which the machine was designed to operate.
18. Do not operate the machine with guards or electrical enclosure covers removed or open.
19. On "hand load" machines, keep clear of the downstream end of the load table when the machine is in operation.
20. Use caution around flight lugs, infeed conveyor lugs tracks and sprockets.

Machine Safety Action Words

All of the safety labels used on this machine has a particular action word, examples are below. The use of such action words mark the severity of the danger involved with each safety label, along with how frequently personnel will be exposed to those dangers. Knowing the amount danger involved with each label and heeding its warning will help prevent personal injury and / or damage to this machine or other equipment.

NOTICE – Denoted with a blue background and white letters, this is for notification of information needed and does not represent any possible harm to personnel.

CAUTION – Denoted with a yellow background and black letters, this represents a possibility of a slight to moderate injury at a low possibility of an injury.

WARNING – Denoted with an amber background and black letters, this represents a low to moderate possibility of a moderate to fatal injury. There could be a fatal injury, but not enough of a possibility to warranty using danger.

Amber Background with Black Letters

DANGER – Denoted with a red background and white letters, this represents a very high possibility of a severe to fatal injury.

Red Background with Black Letters

Safety Labels

The following labels are used to warn against dangers or possible sources of danger. It is recommended that all personnel, working on or around the machine, be trained on their meanings. Failure to heed a warning could lead to personal injury and/or damage to the machinery or other equipment.

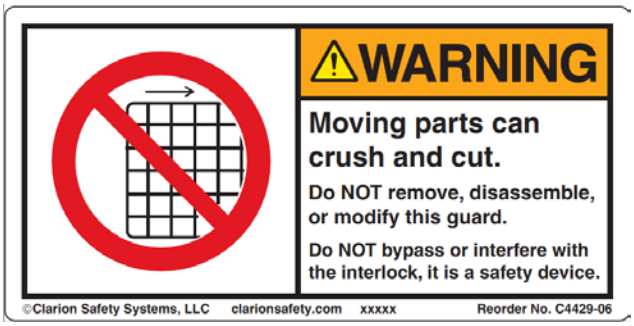

Guard Label for hinged or removable guards with Safety Switches.

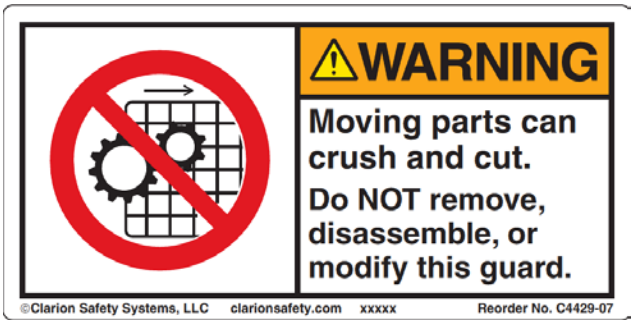

Guard Label for fixed guards.

Label used under guards

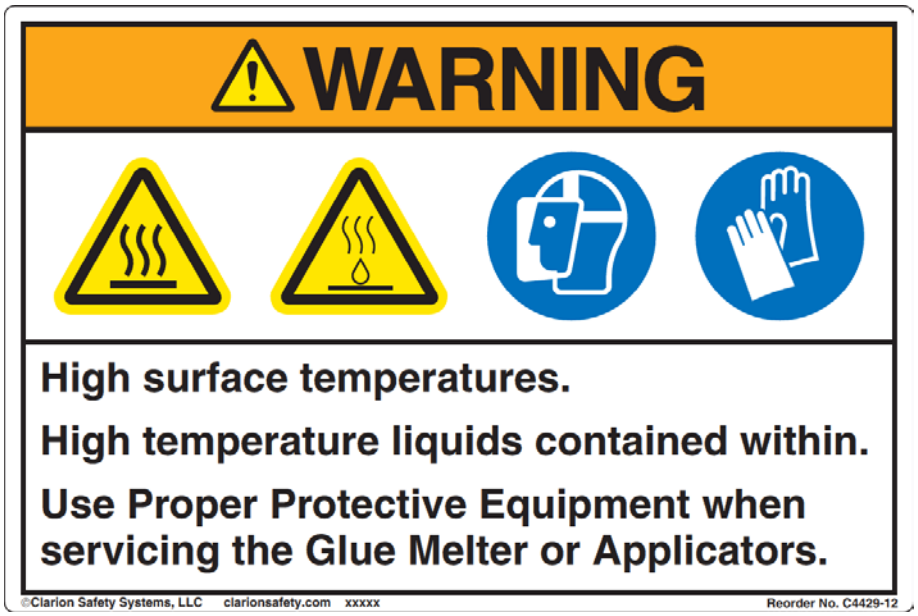

Hot Surface Label on Glue Melters

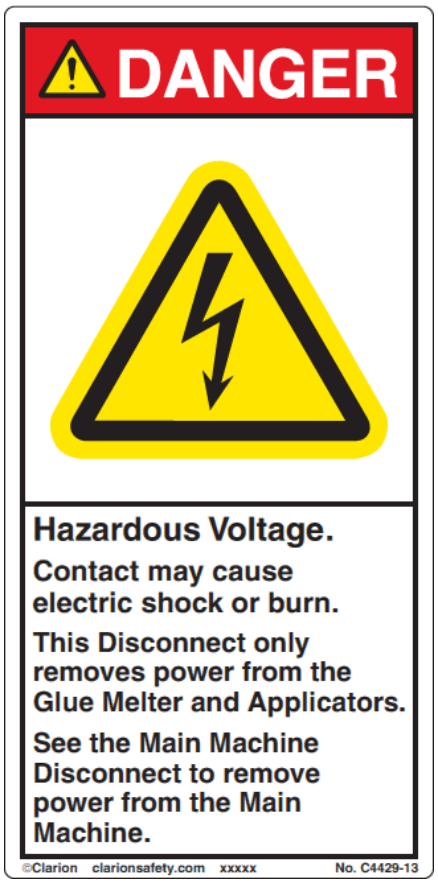

Electrical Hazard Label on Glue Melter Disconnects

Electrical Hazard Label for GracePort® Access

High Impact Label for Corrugated Machines

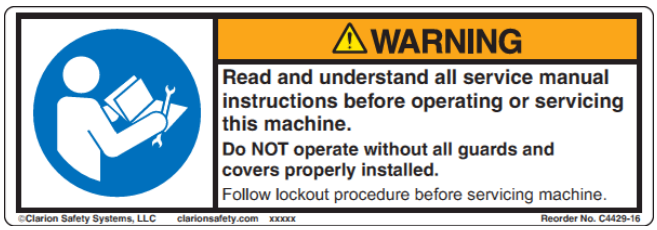

Reference the Manuals

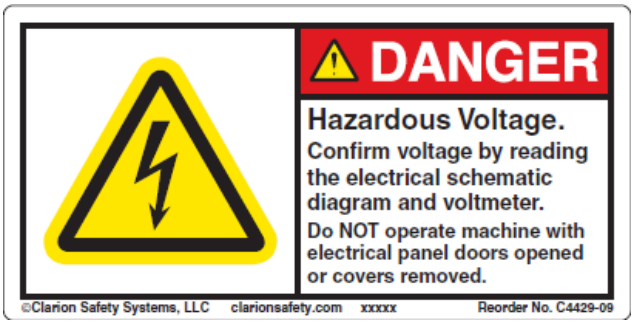

Hazardous Voltage Label for Electrical Junction Boxes

Stay Off Label for Moving Conveyor

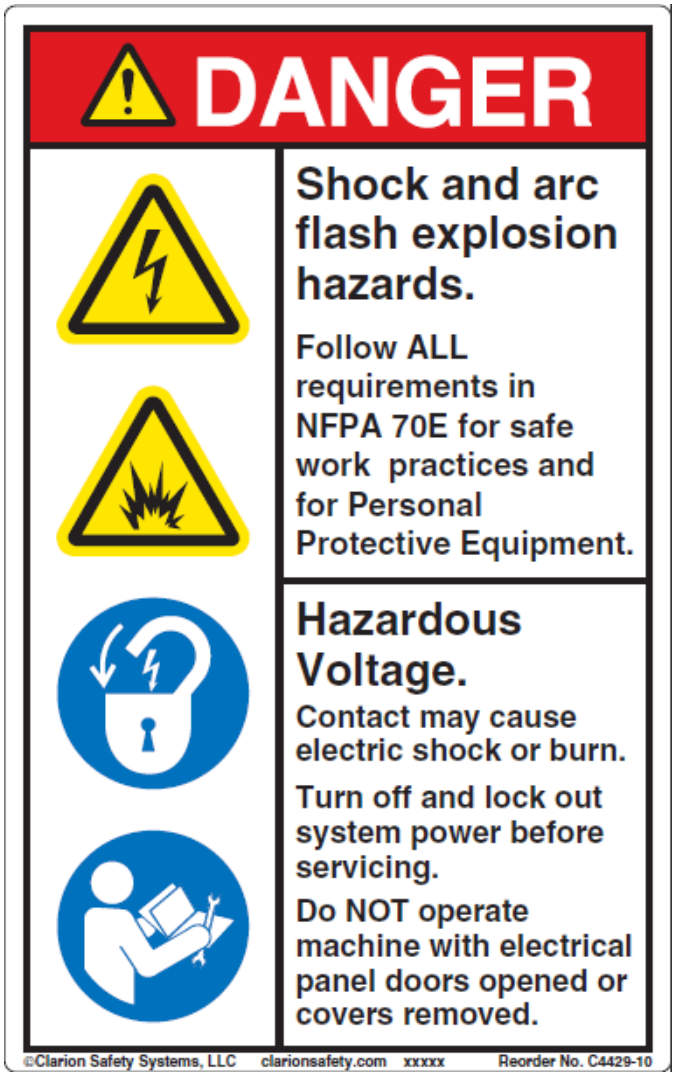

High Voltage and Arc Flash Hazard Label for Electrical Cabinets

Safety Device Label for Light Curtains

Hot Surface Label for Transformers and Glue Guns

Automated Machinery Label for Machinery that Stops / Starts Automatically

Personnel Safety Devices

This machine is equipped with multiple safety devices that are monitored by the machines safety circuit. Some are designed to allow the operator to actuate them in case of an emergency and others to prevent the machine from running when a dangerous condition exists.

Routine testing of the Safety Circuit is recommended to prevent complications due to a malfunctioning safety device. Please see the Preventive Maintenance Schedule in Chapter 3 - Maintenance of this manual for a recommended testing schedule.

Out of all of the safety devices listed, the most effective safety device is the training of employees in safe practices and what to do in case of an emergency.

EMERGENCY STOP SAFETY SWITCH:

Used by operators when there is potential harm to personnel, equipment, or any condition that would need the machine to be stopped immediately.

HINGE OPERATED SAFETY SWITCH:

Used at the infeed and hand load areas of machines. It is used to prevent the operators from being entrapped and dragged into the machine.

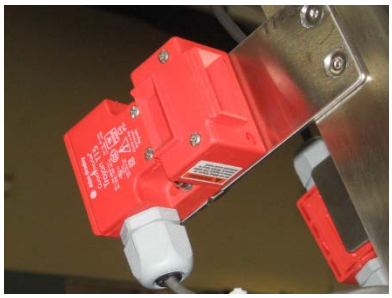

INTERLOCK SAFETY SWITCH:

Used to assure that all removable or hinged guards are closed and / or installed.

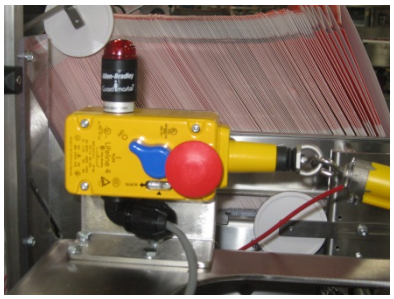

SAFETY PULL CORD:

Used by operators when there is potential for harm to personnel, equipment, or any condition that would need the machine to be stopped immediately.

SAFETY LIGHT CURTAIN:

Used where a physical guard is not economically feasible or operation of the machine requires a light curtain. Light curtains detect obstructions between the transmitter and receiver modules.

Lockout / Tagout Procedure

Before initiating any lockout procedure, make sure the machine has stopped and / or at its zero position. Note the machine locations on Page 1-11; they are labeled by a large blue and white lock label to identify each lockout point.

A. Locate all of the machine LOTO points and make sure there are enough LOTO devices for each point.

B. Remove electrical power from the main machine y by first turning off the main electrical disconnect.

C. Remove pneumatic power from the main machine by turning off the filter regulator.

D. Remove electrical power from the glue system if servicing any part of glue system.

E. Place LOTO devices on each LOTO Point.

F. Before powering up the machine again, notify all personnel affected by the power up.

Lockout / Tagout Points

Before initiating any lockout procedure, make sure the machine has stopped and / or in its zero position. Each lockout point has a large blue and white lock label to identify each lockout point.

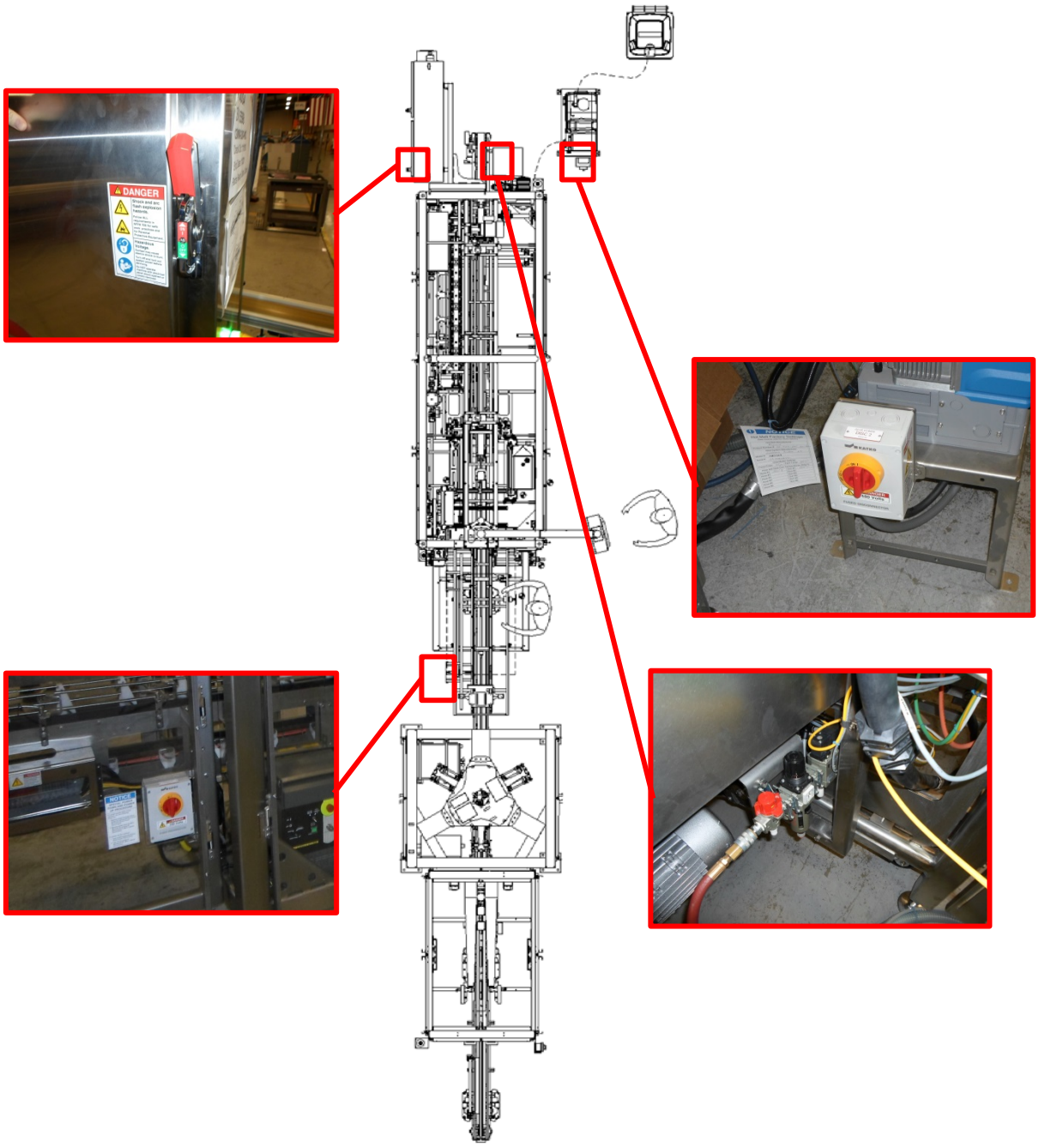

Material Safety Data Sheets

ADCO Manufacturing is making a sincere effort to comply with all applicable federal and state regulations and help customers provide their employees with a safe environment. This machine has within it, the following hazardous chemicals, and we include the following Material Safety Data Sheets for your records.

Please feel free to copy the following Materials Safety Data Sheets for compliance with applicable safety standards.

- Dow Corning – High Vacuum Grease
- Lubriplate – SFGO Ultra-460
- Lubriplate – Synxtreme FG-2

DOW CORNING(R) HIGH VACUUM GREASE

1. PRODUCT AND COMPANY IDENTIFICATION

Dow Corning Corporation
South Saginaw Road
Midland, Michigan 48686

24 Hour Emergency Telephone: (989) 496-5900
Customer Service: (989) 496-6000
Product Disposal Information: (989) 496-6315
CHEMTREC: (800) 424-9300

MSDS No.: 01018817 Revision Date: 2009/05/07

Generic Description: Silicone compound
Physical Form: Grease
Color: Translucent white
Odor: Odorless

NFPA Profile: Health 0 Flammability 1 Instability/Reactivity 0

Note: NFPA = National Fire Protection Association

2. HAZARDS IDENTIFICATION

POTENTIAL HEALTH EFFECTS

Acute Effects

Eye: Direct contact may cause temporary redness and discomfort.

Skin: No significant irritation expected from a single short-term exposure.

Inhalation: No significant effects expected from a single short-term exposure.

Oral: Low ingestion hazard in normal use.

Prolonged/Repeated Exposure Effects

Skin: No known applicable information.

Inhalation: No known applicable information.

Oral: No known applicable information.

Signs and Symptoms of Overexposure

No known applicable information.

Medical Conditions Aggravated by Exposure

No known applicable information.

The above listed potential effects of overexposure are based on actual data, results of studies performed upon similar compositions,

component data and/or expert review of the product. Please refer to Section 11 for the detailed toxicology information.

3. COMPOSITION/INFORMATION ON INGREDIENTS

None present. This is not a hazardous material as defined in the OSHA Hazard Communication Standard.

4. FIRST AID MEASURES

Eye:	Immediately flush with water.
Skin:	No first aid should be needed.
Inhalation:	No first aid should be needed.
Oral:	No first aid should be needed.
Notes to Physician:	Treat according to person's condition and specifics of exposure.

5. FIRE FIGHTING MEASURES

Flash Point:	212 °F / 100 °C (Closed Cup)
Autoignition Temperature:	Not determined.
Flammability Limits in Air:	Not determined.
Extinguishing Media:	On large fires use dry chemical, foam or water spray. On small fires use carbon dioxide (CO2), dry chemical or water spray. Water can be used to cool fire exposed containers.
Fire Fighting Measures:	Self-contained breathing apparatus and protective clothing should be worn in fighting large fires involving chemicals. Determine the need to evacuate or isolate the area according to your local emergency plan. Use water spray to keep fire exposed containers cool.
Unusual Fire Hazards:	None.

6. ACCIDENTAL RELEASE MEASURES

Containment/Clean up:	Determine whether to evacuate or isolate the area according to your local emergency plan. Observe all personal protection equipment recommendations described in Sections 5 and 8. For large spills, provide diking or other appropriate containment to keep material from spreading. If diked material can be pumped, store recovered material in appropriate container. Clean up remaining materials from spill with suitable absorbant. Clean area as appropriate since spilled materials, even in small quantities, may present a slip hazard. Final cleaning may require use of steam, solvents or detergents. Dispose of saturated absorbant or cleaning materials appropriately, since spontaneous heating may occur. Local, state and federal laws and regulations may apply to releases and disposal of this material, as well as those materials and items employed in the cleanup of releases. You will need to determine which federal, state and local laws and regulations are applicable. Sections 13 and 15 of this MSDS provide information regarding certain federal and state requirements.

7. HANDLING AND STORAGE

Use with adequate ventilation. Avoid eye contact.

Use reasonable care and store away from oxidizing materials.

8. EXPOSURE CONTROLS / PERSONAL PROTECTION

Component Exposure Limits

There are no components with workplace exposure limits.

Engineering Controls

Local Ventilation:	None should be needed.
General Ventilation:	Recommended.

Personal Protective Equipment for Routine Handling

Eyes:	Use proper protection - safety glasses as a minimum.
Skin:	Washing at mealtime and end of shift is adequate.
Suitable Gloves:	Handle in accordance with good industrial hygiene and safety practices.
Inhalation:	No respiratory protection should be needed.
Suitable Respirator:	None should be needed.

Personal Protective Equipment for Spills

Eyes:	Use proper protection - safety glasses as a minimum.
Skin:	Washing at mealtime and end of shift is adequate.
Inhalation/Suitable Respirator:	No respiratory protection should be needed.
Precautionary Measures:	Avoid eye contact. Use reasonable care.

Note: These precautions are for room temperature handling. Use at elevated temperature or aerosol/spray applications may require added precautions.

9. PHYSICAL AND CHEMICAL PROPERTIES

Physical Form:	Grease
Color:	Translucent white
Odor:	Odorless
Specific Gravity @ 25°C:	1.1
Viscosity:	2000000 cSt
Freezing/Melting Point:	Not determined.
Boiling Point:	Not determined.
Vapor Pressure @ 25°C:	Not determined.
Vapor Density:	Not determined.
Solubility in Water:	Not determined.
pH:	Not determined.
Volatile Content:	Not determined.
Flash Point:	212 °F / 100 °C (Closed Cup)
Autoignition Temperature:	Not determined.
Flammability Limits in Air:	Not determined.

Note: The above information is not intended for use in preparing product specifications. Contact Dow Corning before writing specifications.

10. STABILITY AND REACTIVITY

Chemical Stability:	Stable.
Hazardous Polymerization:	Hazardous polymerization will not occur.
Conditions to Avoid:	None.
Materials to Avoid:	Oxidizing material can cause a reaction.

Hazardous Decomposition Products

Thermal breakdown of this product during fire or very high heat conditions may evolve the following decomposition products: Carbon oxides and traces of incompletely burned carbon compounds. Silicon dioxide. Formaldehyde.

11. TOXICOLOGICAL INFORMATION

Special Hazard Information on Components

No known applicable information.

12. ECOLOGICAL INFORMATION

Environmental Fate and Distribution

Complete information is not yet available.

Environmental Effects

Complete information is not yet available.

Fate and Effects in Waste Water Treatment Plants

Complete information is not yet available.

Ecotoxicity Classification Criteria

Hazard Parameters (LC50 or EC50)	High	Medium	Low
Acute Aquatic Toxicity (mg/L)	<=1	>1 and <=100	>100
Acute Terrestrial Toxicity	<=100	>100 and <= 2000	>2000

This table is adapted from "Environmental Toxicology and Risk Assessment", ASTM STP 1179, p.34, 1993.

This table can be used to classify the ecotoxicity of this product when ecotoxicity data is listed above. Please read the other information presented in the section concerning the overall ecological safety of this material.

13. DISPOSAL CONSIDERATIONS

RCRA Hazard Class (40 CFR 261)

When a decision is made to discard this material, as received, is it classified as a hazardous waste? No

State or local laws may impose additional regulatory requirements regarding disposal.

14. TRANSPORT INFORMATION

DOT Road Shipment Information (49 CFR 172.101)

Not subject to DOT.

Ocean Shipment (IMDG)

Not subject to IMDG code.

Air Shipment (IATA)

Not subject to IATA regulations.

15. REGULATORY INFORMATION

Contents of this MSDS comply with the OSHA Hazard Communication Standard 29 CFR 1910.1200.

TSCA Status: All chemical substances in this material are included on or exempted from listing on the TSCA Inventory of Chemical Substances.

EPA SARA Title III Chemical Listings

Section 302 Extremely Hazardous Substances (40 CFR 355):
None.

Section 304 CERCLA Hazardous Substances (40 CFR 302):
None.

Section 311/312 Hazard Class (40 CFR 370):

Acute:	No
Chronic:	No
Fire:	No
Pressure:	No
Reactive:	No

Section 313 Toxic Chemicals (40 CFR 372):
None present or none present in regulated quantities.

Note: Chemicals are listed under the 313 Toxic Chemicals section only if they meet or exceed a reporting threshold.

Supplemental State Compliance Information

California

Warning: This product contains the following chemical(s) listed by the State of California under the Safe Drinking Water and Toxic Enforcement Act of 1986 (Proposition 65) as being known to cause cancer, birth defects or other reproductive harm.

None known.

Massachusetts

CAS Number	Wt %	Component Name
7631-86-9	7.0 - 13.0	Silica, amorphous

New Jersey

CAS Number	Wt %	Component Name
63148-62-9	> 60.0	Polydimethylsiloxane
7631-86-9	7.0 - 13.0	Silica, amorphous
70131-67-8	5.0 - 10.0	Dimethyl siloxane, hydroxy-terminated

Pennsylvania

CAS Number	Wt %	Component Name
63148-62-9	> 60.0	Polydimethylsiloxane
7631-86-9	7.0 - 13.0	Silica, amorphous
70131-67-8	5.0 - 10.0	Dimethyl siloxane, hydroxy-terminated

16. OTHER INFORMATION

Prepared by: Dow Corning Corporation

These data are offered in good faith as typical values and not as product specifications. No warranty, either expressed or implied, is hereby made. The recommended industrial hygiene and safe handling procedures are believed to be generally applicable. However, each user should review these recommendations in the specific context of the intended use and determine whether they are appropriate.

(R) indicates Registered Trademark

MATERIAL SAFETY DATA SHEET

SECTION 1 IDENTIFICATION OF THE SUBSTANCE/PREPARATION AND OF THE COMPANY/UNDERTAKING

LUBRIPLATE® Lubricants Co.
129 Lockwood St.
Newark, NJ 07105

Emergency Telephone Number:
1-800-255-3924-CHEM-TEL (24 hour)
Telephone Number for information:
1-973-589-9150

SUBSTANCE: LUBRIPLATE SFGO Ultra 460

TRADE NAMES/SYNONYMS:

NSF REGISTRATION NUMBER: 125541

PRODUCT USE: Synthetic lubricating oil

CREATION DATE: 09/13/2007
REVISION DATE: 03/03/2009

SECTION 2 COMPOSITION/INFORMATION ON INGREDIENTS

COMPONENT: Polyalphaolefin
CAS NUMBER: 68037-01-4
EC NUMBER (EINECS): 500-183-1
PERCENTAGE: 95-100

COMPONENT: Alkylated diphenylamine
CAS NUMBER: 68411-46-1
EC NUMBER (EINECS): 270-128-1
PERCENTAGE: 0-1

COMPONENT: Amines
CAS NUMBER: 80939-62-4
EC NUMBER (EINECS): 279-632-6
PERCENTAGE: 0-1

COMPONENT: Dioctyl sebacate
CAS NUMBER: 2432-87-3
EC NUMBER (EINECS): 219-411-3
PERCENTAGE: 0-1

COMPONENT: Propyl paraben
CAS NUMBER: 94-13-3
EC NUMBER (EINECS): 202-307-7
PERCENTAGE: 0-1

COMPONENT: Polyisobutylene
CAS NUMBER: 9003-27-4
EC NUMBER (EINECS): NA
PERCENTAGE: 0-1

COMPONENT: Phosphate derivatives
CAS NUMBER: NA
EC NUMBER (EINECS): NA
PERCENTAGE: 0-1

COMPONENT: Silicone antifoam
CAS NUMBER: NA
EC NUMBER (EINECS): NA
PERCENTAGE: 0-1

NOTE: The IP 346 value of the mineral oil is less than 3%

SECTION 3 HAZARDS IDENTIFICATION

POTENTIAL HEALTH EFFECTS:
INHALATION:
SHORT TERM EXPOSURE: Irritation
LONG TERM EXPOSURE: Lung damage
SKIN CONTACT:
SHORT TERM EXPOSURE: Irritation
LONG TERM EXPOSURE: Irritation, skin disorders
EYE CONTACT:
SHORT TERM EXPOSURE: Irritation
LONG TERM EXPOSURE: No information available
INGESTION:
SHORT TERM EXPOSURE: Diarrhea, difficulty breathing
LONG TERM EXPOSURE: no information on significant adverse effects

HAZARDOUS MATERIAL IDENTIFICATION SYSTEM (HMIS):
Health – 1
Flammability – 1
Reactivity – 0

Not a Controlled Product under (WHMIS) – Canada **Special Protection: See Section 8**

SECTION 4 FIRST AID MEASURES

INHALATION: Vapor pressure is very low and inhalation at room temperature is not a problem. If overcome by vapor from hot product, immediately remove from exposure and call a physician.

SKIN CONTACT: Remove any contaminated clothing and wash with soap and warm water. If injected by high pressure under skin, regardless of the appearance or its size, contact a physician IMMEDIATELY. Delay may cause loss of affected part of body.

EYE CONTACT: Flush eyes with clear water for 15 minutes or until irritation subsides. If irritation persists, consult a physician.

INGESTION: If ingested, call a physician immediately. Do not induce vomiting.

SECTION 5 FIRE FIGHTING MEASURES

FIRE AND EXPLOSION HAZARDS: Slight fire hazard

EXTINGUISHING MEDIA: Foam, dry chemical, carbon dioxide or water spray (fog)

FIRE FIGHTING: Cool exposed containers with water. Use air-supplied breathing equipment for enclosed or confined spaces.

HAZARDOUS COMBUSTION PRODUCTS:
Thermal decomposition products or combustion: oxides of carbon, oxides of sulphur

SECTION 6 ACCIDENTAL RELEASE MEASURES

OCCUPATIONAL RELEASE: Recover liquid, wash remainder with suitable petroleum solvent or add absorbent. Keep petroleum products out of sewers and watercourses. Advise authorities if product has entered or may enter sewers and watercourses.

SECTION 7 HANDLING AND STORAGE

STORAGE: Store and handle in accordance with all current regulations and standards. Keep container tightly closed. Keep away from heat, sparks, and flame. See original container for storage recommendations. Keep separated from incompatible substances.

SECTION 8 EXPOSURE CONTROLS/PERSONAL PROTECTION

EXPOSURE LIMITS:
White mineral oil:
MINERAL OIL MIST:
5 mg/m^3 UK OES TWA
10mg/m^3 UK OES STEL

VENTILATION: Provide local exhaust ventilation system. Ensure compliance with applicable exposure limits.

EYE PROTECTION: Wear splash resistant safety goggles. Provide an emergency eye wash fountain and quick drench shower in the immediate work area.

CLOTHING: Wear appropriate chemical resistant clothing.

GLOVES: Wear appropriate chemical resistant (nitrile) gloves.

RESPIRATOR: Consider the need for appropriate protective equipment, such as self-contained breathing apparatus, adequate masks and filters.

SECTION 9 PHYSICAL AND CHEMICAL PROPERTIES

PHYSICAL STATE: liquid
APPEARANCE: clear
COLOUR: water-white
PHYSICAL FORM: oil
ODOR: odorless
BOILING POINT: >288 C
FREEZING POINT: Not available
FLASH POINT: 263 C (COC)
LOWER FLAMMABLE LIMIT: 0.9% by volume
UPPER FLAMMABLE LIMIT: 7.0% by volume
AUTO IGNITION: 288 C (COC)
VAPOUR PRESSURE: <0.01 mm Hg
VAPOR DENSITY (air=1): >5
SPECIFIC GRAVITY (water=1): 0.85
DENSITY: not available
WATER SOLUBILITY: negligible
pH: not available
VOLATILITY: not available
ODOR THRESHOLD: not available
EVAPORATION RATE: <0.01 (Butyl acetate=1)
VISCOSITY: 45.01 mm^2/s @ 100 C
COEFFICIENT OF WATER/OIL DISTRIBUTION: not available

SECTION 10 STABILITY AND REACTIVITY

REACTIVITY: Stable at normal temperatures and pressures

CONDITIONS TO AVOID: Avoid heat, flames, sparks and other sources of ignition. Avoid contact with strong oxidants like liquid chlorine, concentrated oxygen.

INCOMPATIBLES: Oxidising materials, chlorine

HAZARDOUS DECOMPOSITION:
Thermal decomposition products or combustion: oxides of carbon, oxides of sulphur

POLYMERISATION: Will not polymerise.

SECTION 11 TOXICOLOGICAL INFORMATION

Polyalphaolefin:
TOXICITY DATA:
Greater than 2,000 mg/kg LD50 oral-rat

Alkylated diphenylamine:
TOXICITY DATA:
Greater than 5,000 mg/kg LD50 oral-rat

Amines:
TOXICITY DATA:
Greater than 5,000 mg/kg LD50 oral-rat

Propyl paraben:
TOXICITY DATA:
Greater than 8,000 mg/kg LD50 oral-rat

Phosphate derivatives:
TOXICITY DATA:
Greater than 2,000 mg/kg LD50 oral-rat

Dioctyl sebacate:
TOXICITY DATA:
Greater than 5,000 mg/kg LD50 oral-rat

Polyisobutylene:
TOXICITY DATA:
Greater than 2,000 mg/kg LD50 oral-rat

Silicone defoamer:
TOXICITY DATA:
Greater than 10,000 mg/kg LD50 oral-rat

SECTION 12 ECOLOGICAL INFORMATION

Not available

SECTION 13 DISPOSAL CONSIDERATIONS

Dispose in accordance with all applicable regulations

SECTION 14 TRANSPORT INFORMATION

LAND TRANSPORT ADR: No classification assigned.

LAND TRANSPORT RID: No classification assigned.

AIR TRANSPORT IATA: No classification assigned.

AIR TRANSPORT ICAO: No classification assigned.

MARITIME TRANSPORT IMDG: No classification assigned.

SECTION 15 REGULATORY INFORMATION

EUROPEAN REGULATIONS:
EC CLASSIFICATION (CALCULATED): Not classified as dangerous.

SECTION 16 OTHER INFORMATION

The above information is furnished without warranty, expressed or implied, except that it is accurate to the best knowledge of LUBRIPLATE Lubricants Company. The data on these sheets relates only to the specific material designated herein. LUBRIPLATE Lubricants Company assumes no legal responsibility for use or reliance upon this data.

MATERIAL SAFETY DATA SHEET

SECTION 1 IDENTIFICATION OF THE SUBSTANCE/PREPARATION AND OF THE COMPANY/UNDERTAKING

LUBRIPLATE® Lubricants Co.
129 Lockwood St.
Newark, NJ 07105

Emergency Telephone Number:
1-800-255-3924-CHEM-TEL (24 hour)
Telephone Number for information:
1-973-589-9150

SUBSTANCE: LUBRIPLATE Synxtreme FG-2

TRADE NAMES/SYNONYMS:

NSF H-1 REGISTRATION NUMBER: 136212

PRODUCT USE: Synthetic lubricating grease

CREATION DATE: 05/15/2007
REVISION DATE: 05/05/2010

SECTION 2 COMPOSITION/INFORMATION ON INGREDIENTS

COMPONENT: Synthetic oil based lubricating grease
CAS NUMBER: NA
EC NUMBER (EINECS): NA
PERCENTAGE: 100

SECTION 3 HAZARDS IDENTIFICATION

POTENTIAL HEALTH EFFECTS:
INHALATION:
SHORT TERM EXPOSURE: Irritation
LONG TERM EXPOSURE: Lung damage
SKIN CONTACT:
SHORT TERM EXPOSURE: Irritation
LONG TERM EXPOSURE: Irritation, skin disorders
EYE CONTACT:
SHORT TERM EXPOSURE: Irritation
LONG TERM EXPOSURE: No information available
INGESTION:
SHORT TERM EXPOSURE: Diarrhea, difficulty breathing
LONG TERM EXPOSURE: no information on significant adverse effects

HAZARDOUS MATERIAL IDENTIFICATION SYSTEM (HMIS):
Health – 1
Flammability – 1
Reactivity – 0

Not a Controlled Product under (WHMIS) – Canada **Special Protection: See Section 8**

SECTION 4 FIRST AID MEASURES

INHALATION: Vapor pressure is very low and inhalation at room temperature is not a problem. If overcome by vapor from hot product, immediately remove from exposure and call a physician.

SKIN CONTACT: Remove any contaminated clothing and wash with soap and warm water. If injected by high pressure under skin, regardless of the appearance or its size, contact a physician IMMEDIATELY. Delay may cause loss of affected part of the body.

EYE CONTACT: Flush with clear water for 15 minutes or until irritation subsides. If irritation persists, consult a physician.

INGESTION: If ingested, call a physician immediately. Do not induce vomiting.

SECTION 5 FIRE FIGHTING MEASURES

FIRE AND EXPLOSION HAZARDS: Slight fire hazard

EXTINGUISHING MEDIA: Foam, Dry Chemical, Carbon Dioxide or Water Spray (Fog)

SPECIAL FIRE FIGHTING PROCEDURES: Cool exposed containers with water. Use air-supplied breathing equipment for enclosed or confined spaces.

UNUSUAL FIRE AND EXPLOSION HAZARDS: Do not store or mix with strong oxidants. Empty containers retain residue. Do not cut, drill, grind, or weld, as they may explode.

SECTION 6 ACCIDENTAL RELEASE MEASURES

OCCUPATIONAL RELEASE: Scrape up grease, wash remainder with suitable petroleum solvent or add absorbent. Keep petroleum products out of sewers and water courses. Advise authorities if product has entered or may enter sewers and water courses.

SECTION 7 HANDLING AND STORAGE

STORAGE: Keep containers closed when not in use. Do not handle or store near heat, sparks, flame, or strong oxidants.

SECTION 8 EXPOSURE CONTROLS/PERSONAL PROTECTION

EXPOSURE LIMITS:
OIL MIST IN AIR (Not Encountered in Normal Usage):

5 mg/m^3 UK OES TWA
10mg/m^3 UK OES STEL

VENTILATION: Provide local exhaust ventilation system. Ensure compliance with applicable exposure limits.

EYE PROTECTION: Wear splash resistant safety goggles. Provide an emergency eye wash fountain and quick drench shower in the immediate work area.

CLOTHING: Wear appropriate chemical resistant clothing.

GLOVES: Wear appropriate chemical resistant (nitrile) gloves.

RESPIRATOR: Consider the need for appropriate protective equipment, such as self-contained breathing apparatus, adequate masks and filters.

SECTION 9 PHYSICAL AND CHEMICAL PROPERTIES

PHYSICAL STATE: semi-solid
APPEARANCE: smooth
COLOUR: tan
PHYSICAL FORM: grease
ODOR: mild petroleum odor
BOILING POINT: >288°C
FREEZING POINT: Not available
FLASH POINT: >180°C (COC)
LOWER FLAMMABLE LIMIT: 0.9% by volume
UPPER FLAMMABLE LIMIT: 7.0% by volume
AUTO IGNITION: not available
VAPOUR PRESSURE: not available
VAPOR DENSITY (air=1): not available
SPECIFIC GRAVITY (water=1): 0.96
DENSITY: not available
WATER SOLUBILITY: negligible
pH: not available
VOLATILITY: not available
ODOR THRESHOLD: not available
EVAPORATION RATE (Butyl acetate = 1): <0.01
VISCOSITY: not available
COEFFICIENT OF WATER/OIL DISTRIBUTION: not available

SECTION 10 STABILITY AND REACTIVITY

REACTIVITY: Stable at normal temperatures and pressures

CONDITIONS TO AVOID: Avoid heat, flames, sparks and other sources of ignition. Avoid contact with incompatible materials.

INCOMPATIBLES: Oxidising materials, chlorine

HAZARDOUS DECOMPOSITION:
Thermal decomposition products or combustion: oxides of carbon, oxides of sulphur

POLYMERISATION: Will not polymerise.

SECTION 11 TOXICOLOGICAL INFORMATION

Synthetic oil based lubricating grease:
TOXICITY DATA:
No data available

SECTION 12 ECOLOGICAL INFORMATION

Not available

SECTION 13 DISPOSAL CONSIDERATIONS

Dispose in accordance with all applicable regulations

SECTION 14 TRANSPORT INFORMATION

LAND TRANSPORT ADR: No classification assigned.

LAND TRANSPORT RID: No classification assigned.

AIR TRANSPORT IATA: No classification assigned.

AIR TRANSPORT ICAO: No classification assigned.

MARITIME TRANSPORT IMDG: No classification assigned.

SECTION 15 REGULATORY INFORMATION

EUROPEAN REGULATIONS:
EC CLASSIFICATION (CALCULATED): N

SECTION 16 OTHER INFORMATION

The above information is furnished without warranty, expressed or implied, except that it is accurate to the best knowledge of LUBRIPLATE Lubricants Company. The data on these sheets relates only to the specific material designated herein. LUBRIPLATE Lubricants Company assumes no legal responsibility for use or reliance upon this data.

Chapter 2 – Installation

This Chapter of the Service Manual covers many installation instructions and guides. Guide lines include wiring and pneumatic recommendations and general guidelines to installation of the machine.

Table of Contents

Chapter 2 – Installation 2-1

Arrival 2-2

Positioning 2-2

Connecting Electrical Power 2-3

Connecting Air 2-4

Floor Plan 2-5

Arrival

This machine was thoroughly tested at the factory prior to shipment.
After proper installation, the machine should be ready for operation.

When the machine has arrived:

1. Inspect the machine and electrical enclosure for damage.
2. Check the shipping vehicle for separate boxes or cartons that may contain parts for the machine.
3. Check the packing list to insure all accessories are present.

Positioning

1. When moving the machine with a fork lift or power lift device positions the lift only in areas that are structurally sound. Be careful not to pinch loose hoses, electrical wires, or conduit under the machine.
2. When rolling the machine, make sure all feet are up enough so they will not catch on high spots on the floor.
3. Move the machine to its final destination.
4. Level machine on the machines feet. Do not use the machine casters for permanent setup. Remove them if they interfere with leveling the machine.

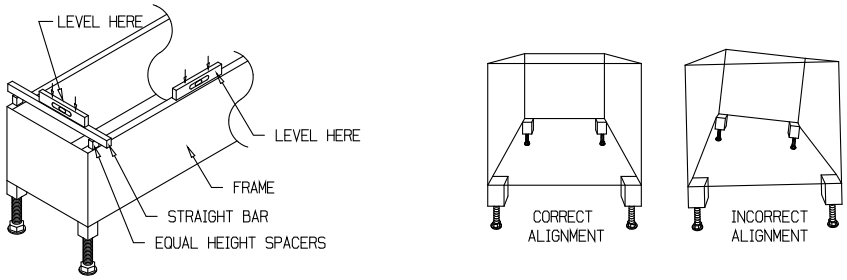

5. When leveling the machine place the level on the horizontal part of the frame in line with the machine feet. If any part of the inner workings of the machine interferes with the level, use two equal height spacers to elevate the level above the obstruction (see figure above). Adjust the feet until the machine is level between each set of feet (this may take several attempts as each adjustment may affect the previous one). Incorrect leveling / alignment may cause damage to the machine when it runs. Do not place the level on the guards for level reading. Once the machine is level being sure to tighten the jam nut on each foot to prevent the feet from turning.
6. Connect additional equipment to the machine. A list of the connecting sequences may have been shipped with this machine. If there is no list, connect component(s) as they match up. Connect chain, matching up timing marks.
7. Mount guard accessories.
8. Check the machine over for loose components, fasteners, and wire terminals. Check hot glue applicator hoses for damage.

Connecting Electrical Power

Only authorized personnel should perform electrical connections to this machine!
All local and state regulations for electrical connection wiring should be followed.

1. Check the machines serial number, name plate, and electrical schematic drawing to insure that the proper voltage is being connected to the machine. You can find a schematic at the end of this manual and in the main electrical enclosure on the machine.

   NOTE: *If the voltage is different from as specified, contact "ADCO" immediately, notify them of the discrepancy. Additional equipment may have to be added (i.e. Transformers, Overload heaters, etc.).*

2. An electrician should make all wire connections to this and other wire equipment. If the machine was shipped in two or more sections, reconnect the wires using the electrical schematic.

3. An electrician should inspect all electrical enclosures and related components for damage due to shipment.

4. The machine nameplate supplies the amperage rating of the machine, the breaker and/or fuse sizes. *Wire size and type should conform to local and state codes.*

5. A ground wire must be supplied from the plant's grounding system. This ground wire must be able to carry the full amperage load of the machine.

6. After connecting incoming power to the machine, check for proper rotation of AC motors.
   If the machine is equipped with a vacuum pump:

   a. Power up the machine without the vacuum pump fuses installed.

   b. Turn the Vacuum Controls to OFF.

   c. Pull the vacuum hose from the vacuum pump inlet.

   d. Places the fuses into their holders for the vacuum pump.

   e. Turn the Vacuum Controls to ON.

   f. If the pump is blowing air through the inlet, correct the phasing at the main electrical disconnect supply line.

   g. After the correction has been made, replace the vacuum hose.

   If no vacuum pump is installed:

   a. Power up the machine.

   b. Jog the machine, please see Chapter 4 – Operation for how to jog the machine.

   c. If the machine jogs backward, correct the phasing upstream of the machine's main electrical disconnect supply line.

7. An electrician should make sure the safety circuit is in proper working condition.

Connecting Air

Most ADCO machines require a supply of compressed air. A supply line must be connected to the lockout valve that is attached to the air filter / regulator / lubricator (FRL) assembly. Normally this assembly is located on the outside of the machine, in a place that is readily accessible.

The incoming air pressure should be above 80 PSI. The air regulator on the ADCO machine has been preset; adjustments should not be necessary. For safety reasons, be sure no one is reaching into the machine when the air supply is turned on.

"THE DIMENSIONS ON THIS FLOOR PLAN DRAWING ARE FOR GENERAL LAYOUT PURPOSES ONLY. PRECISE DIMENSIONAL DETAILS FROM DESIGN DRAWINGS CAN BE SUPPLIED UPON REQUEST."

DRAWING NUMBER: 5624GFP

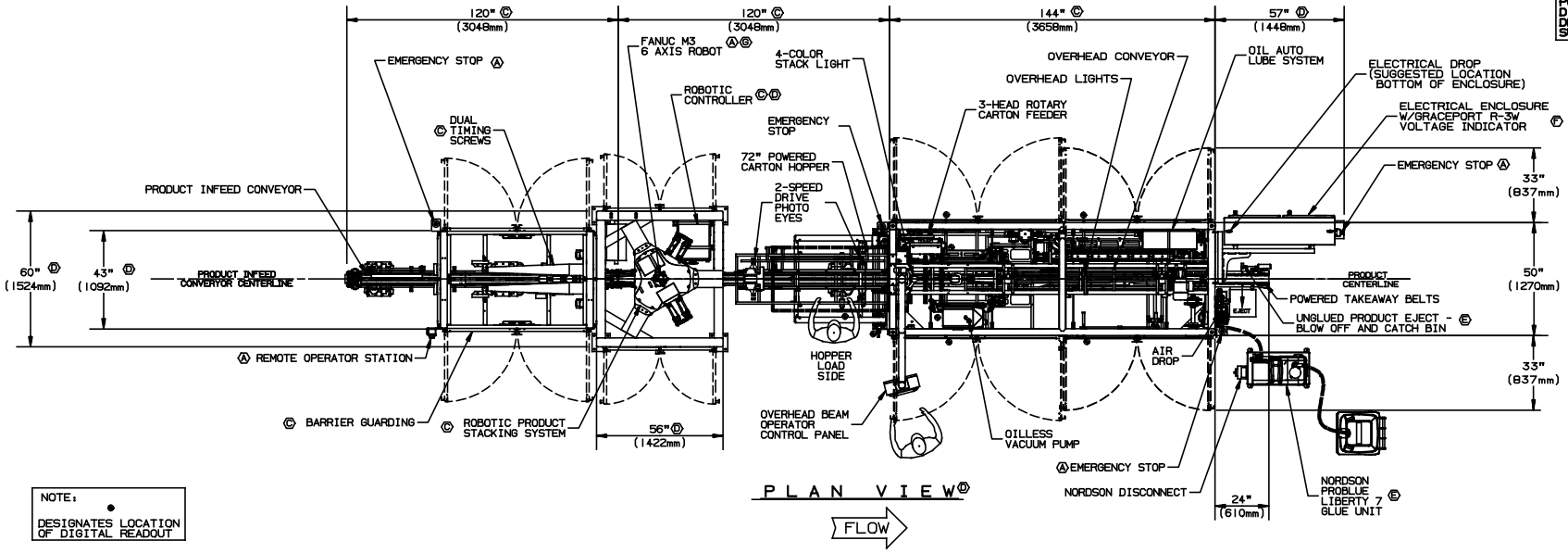

METRIC CONSTRUCTION

NOTE:
● DESIGNATES LOCATION OF DIGITAL READOUT

CONTINUOUS MOTION

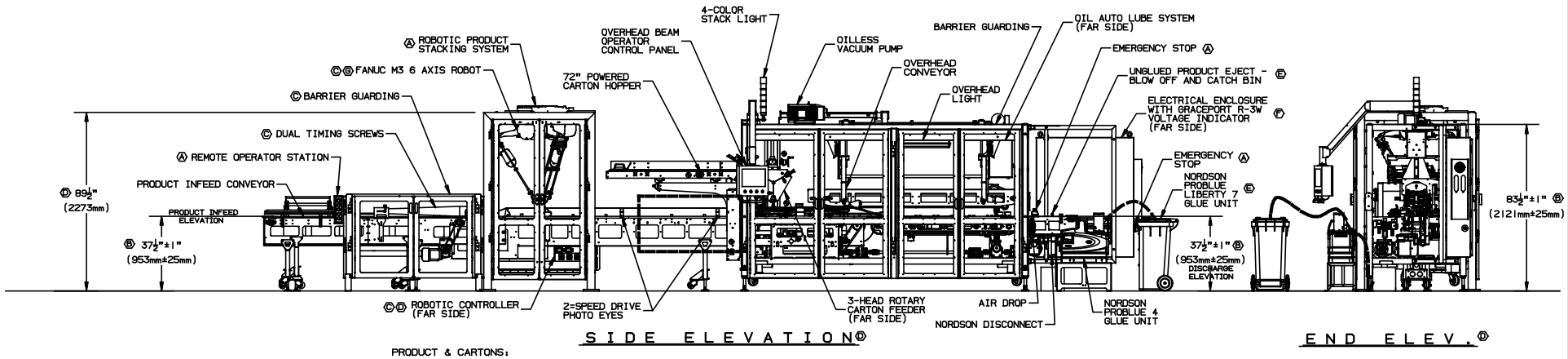

PRODUCT & CARTONS:

A) PRODUCT: FACIAL CLEANSER (WET) "EMU" ROUND TUB
PATTERN: SINGLE
SLEEVE SIZE: 3.562" x 3.633" x 2.59"

B) PRODUCT: FACIAL CLEANSER (WET) "EMU" ROUND TUB
PATTERN: | OVER |
SLEEVE SIZE: 3.562" x 3.633" x 5.18"

C) PRODUCT: FACIAL CLEANSER (WET) "FCW" SQUARE TUB
PATTERN: SINGLE
SLEEVE SIZE: 5.011" x 2.094" x 2.17"

D) PRODUCT: FACIAL CLEANSER (WET) "FCW" SQUARE TUB
PATTERN: | OVER |
SLEEVE SIZE: 5.011" x 2.094" x 4.34"

E) PRODUCT: FACIAL CLEANSER (DRY) RECTANGULAR TUB
PATTERN: SINGLE
SLEEVE SIZE: 3.625" x 2.812" x 3.1"

F) PRODUCT: FACIAL CLEANSER (DRY) RECTANGULAR TUB
PATTERN: | OVER |
SLEEVE SIZE: 3.625" x 2.812" x 6.2"

DATE	SYM	NOTES	AUTH	BY
4/03/15	Ⓑ	CHANGE ROBOT SPEC FROM M2 3 AXIS TO FANUC M3 6 AXIS ROBOT PER OCN DATED 4/03/15	DK	JKY
4/01/15	Ⓕ	ADD CUSTOMER SPECIFIED GRACEPORT R-3W VOLTAGE INDICATOR TO MAIN ELECTRICAL ENCLOSURE DISCONNECT PER OCN DATED 4/01/15	DK	JKY
2/27/15	Ⓔ	REPLACE PROBLUE 4 WITH PROBLUE LIBERTY 7 GLUE UNIT, ADD UNGLUED PRODUCT EJECT -BLOW OFF AND CATCH BIN AFTER CYCLE OR -E-STOP FOR CUSTOMER CONVEYOR PER OCN DATED 2/25/15	DK	JKY
1/16/15	Ⓓ	RELOCATE ROBOTIC CONTROLLER AND UPDATE SOLIDWORKS MODEL IN FLOOR PLAN	DK	JKY
1/09/15	Ⓒ	RELOCATE LOADING SYSTEM AND INDEXING SYSTEM UPSTREAM 12"	DK	JKY
12/05/14	Ⓑ	CHANGE CARTON BOTTOM TO FLOOR ELEVATION TO 37.5" ±1" PER OCN DATED 11/24/14	DK	JKY
11/24/14	Ⓐ	SHOW LOCATION FOR (4) EMERGENCY STOPS AND (1) 4-BUTTON REMOTE OPERATOR STATION	DK	JKY

APPROVED

BY:
DATE:
TITLE:

NOTE: MANUFACTURING OF THIS EQUIPMENT WILL NOT BEGIN UNTIL RECEIPT OF THIS APPROVED PRINT.

SALES DEPT. BY: DATE:
ENGINEER DEPT. BY: DATE:

ADCO ENGINEERING DATA: DIMENSIONS ARE APPROXIMATE
QUOTE: 20711 B4 MAX CPM: 110
PRODUCT DESCRIPTION: FACIAL CLEANSER
CARTON SIZE(S): A) SEE TABLE ON LEFT SIDE
B)
C)
VOLTAGE: 460v/3ph/60hz AMPERAGE(EST.): TBD
AIR REQUIREMENT: 90 PSI @ 8-9 SCFM
WATER REQUIREMENT: NONE

DRAWN BY: JKY
DATE: 4/03/15
SCALE: NONE
STAINLESS STEEL FRAME

ADCO
2170 ACADEMY AVE
SANGER, CA 93657
INFO@ADCOINFO.COM
888.608.5946

FLOOR PLAN - 9WM-110-PW

KIMBERLY-CLARK

Chapter 3 – Maintenance

This Chapter of the Service Manual covers the basic maintenance of the machine, and this includes cleaning, lubrication and miscellaneous procedures for third party components. It also includes the complete Preventative Maintenance Schedule and troubleshooting guide.

Table of Contents

Chapter 3 – Maintenance 3-1

General Maintenance 3-2

Cleaning 3-2

Preventative Maintenance Schedule 3-3

Lube Points 3-11

Lubricating INA Roller Guides 3-12

Glue System Filter Location / Maintenance** 3-13

General Maintenance

To insure a properly operating machine, it is recommended that a routine preventative maintenance schedule be established (one that includes cleaning and lubricating). This section serves as a supplement to industry standards, and should help in establishing a schedule that is right for this equipment.

Cleaning

WARNING: LOCKOUT / TAGOUT MACHINE POWER SOURCES BEFORE CLEANING THE MACHINE. FOR DETAILS SEE CHAPTER 1 - SAFETY

It is IMPORTANT that the machine be kept clean. Machines operating in food and repackaging plants can be *visually inspected and cleaned as necessary by wiping with a dry cloth and a light solution of mild detergent,* such as simple green.

To clean the machine:

1. Blow off the machine with compressed air to clear dust and loose debris from the machine.
2. Check product and carton transfer areas for any cartons and product jammed during the production run.
3. For stubborn areas, use a rag and mild detergent such as dish soap (or an approved cleaner) and wipe down areas where the cartons and product contact the machine.
4. For areas prone to oil and grease (such as around bearings, chains, and gearboxes), use a light degreaser to clean any leaks or build-ups. Relubricate chains and bearings afterward.
5. For glue build ups around gluing and compression areas, it is recommended to use a putty knife to scrape off the glue after it has cooled.
6. Further cleaning of the machine is encouraged, but not necessary.

NOTICE: This machine has not been built to take any direct sprays of water, caustic solutions or steam. Any cleaning with water, caustic solutions, or steam will result in corrosion and water infiltration and will not be covered by the manufacturers' warranty.

Preventative Maintenance Schedule

Task			Recom. Hours	Actual Hours	Procedure
Feeder and Vacuum System	1	INSPECT: Vacuum Cups	8		Wipe clean with a damp cloth to remove dust & debris. Replace if worn, cracked, or torn
	2	INSPECT: Vacuum Filters	8		Inspect vacuum filters to see if they contain liquid or debris. Clean as needed. More frequent inspections may be required in dusty environments.
	3	INSPECT: Oil level and lubricate Gast Lube Pumps equipped with oil reservoir	8		Inspect reservoir for proper oil level. Recommended Lubricants: Lubriplate SFGO Ultra-32 (Food Grade - ISO VG 32) Gast #AD220 Klüber Klüberoil 4 UH-1-32N
	4	CLEAN: Vacuum pump	80		Using compressed air, blow off the exterior and inside of the shroud.
	5	CLEAN: Vacuum pump intake filter	80		Please follow the Becker Vacuum Pump Maintenance Procedure for instructions, or view the vacuum pump manual in Section 8 of this manual.
	6	CLEAN: Ventri Vacuum Generator	160		For more information, please review the Component Literature in Section 8 of this manual.
	7	INSPECT: Rotary feed arms / vacuum cups to verify that they are square / parallel with each other	160		Please see Section 5 - Adjustments for aligning the pick arms.
	8	INSPECT: Rotary Carton Feeder bushing for wear and proper lubrication	160		INSPECTION: 1. Jog the machine until the feeder is in the Zero position (vacuum cups facing down) or mark its location before disconnecting the drive. 2. Disconnect the rotary feeder drive. 3. Rotate the feeder by hand, if the movement is smooth it is OK. 4. If the movement is rough or binding, inspect bevel gears, also refer to Item 25. 5. If movement still binding, remove the carton feeder and inspect brass bushing. If the bushing is .003" larger than the shaft, or oblong, replace immediately. Check for shavings or discolored grease in first 4 hours of running LUBRICATION: Using a manual grease gun, slowly pump one stroke. Caution! If there is too much grease, it will migrate into the vacuum system through the vacuum manifold. Recommended Lubricants: Lubriplate Synxtreme FG-2 (Food Grade - NLGL Grade 2) Klüber Klübersynth UH1 14-151

	Task		Recom. Hours	Actual Hours	Procedure
	9	INSPECT: All vacuum lines for damage and blockages.	180		Disconnect both ends of the vacuum lines and: -Loose Debris: Blow pressurized air through one end -Thick Fluids: Run a paper towel crumpled over a stiff rod or wire and push it through to remove -If the line is damaged, replace.
Feeder and Vacuum System	10	INSPECT: Vacuum system for leaks and proper vacuum	1,000		INSPECTION: 1. Use a vacuum gauge with a multi-size fitting for various size diameters (capable of fitting 1/4" ID Hose to 3/4" ID hose). 2. Start at the suction cup mounts, which should have no less then 16 inHG. If less: 3. Work your way upstream to the vacuum generator / pump, stopping at each hose connection until the leak is found. 4. If a leak is found, repair or replace as needed. 5. Retest vacuum at cups to make sure vacuum is at least 16 inHG at each arm. **NOTE**: When checking a particular vacuum line, you may need to block the others to prevent vacuum loss. If a leak is found at the vacuum manifold itself, please check item 12 on this schedule.
Feeder and Vacuum System	11	INSPECT: Rotary feed belts for proper tension and wear	1,000		INSPECTION: 1. Twist each belt 90 degrees with your fingers. 2. If the belt twists easily, tighten the belt until it requires some force to twist. 3. If there is no more take-up, replace the timing belt.
Feeder and Vacuum System	12	INSPECT, CLEAN & LUBRICATE: Rotary feeder vacuum manifold	2,500		CLEAN AND RELUBRICATE: 1. Remove the rotary feeder from its mount. 2. Remove the manifold from the feeder 3. Clean the manifold with warm water and mild detergent 4. Use pressurized air to dry 5. Inspect the face of the vacuum manifold for scratches or irregular wear. If damaged, replace. 6. Replace the air and vacuum lines 7. Relubricate the face of the vacuum manifold with a small amount of vacuum grease, careful not to get grease inside the vacuum slots 8. Reassemble. Recommended Lubricants: Kluber Barierta L 55/3 Dow Corning High Vacuum Grease (Food Grade) RETIMING: Please see Section 5 - Adjustments for timing the feeder back in.
Feeder and Vacuum System	13	INSPECT: Vanes inside the vacuum pump housing	2,500		Please see the Becker Vacuum Pump Maintenance Procedure later in this section (if equiped).
Hopper	14	INSPECT: Hopper advance ratchet	1,000		This item is not serviceable. If clutch action is rough or binds, replace

	Task		Recom. Hours	Actual Hours	Procedure
Air System	15	INSPECT: Air filters	8		Inspect air filters to see if they contain liquid or debris. More frequent inspections may be required in dusty or moist environments. Clean as needed, but make sure the filter is re-inserted properly.
Air System	16	INSPECT & REFILL: Airline lubricators*	8		Refill weekly, keep reservoir full of oil. Do not run the oiler without lubricant! *Note: most machines do not require airline lubricators. If the Filter/Regulator does not contain a lubricator - oil is not required Recommended Lubricants: Lubriplate FMO-150-AW (Food Grade - ISO VG 32) Klüber Klüberoil 4 UH-1-32N (Avoid Synthetic Oils, they degrade some type of seals.)
Electrical System	17	INSPECT: Photo eyes for position/alignment	8		Reposition photo eyes if they do not read the desired target. Make sure the mounting hardware is tight. **NOTE**: Make sure the photo eyes are not above heat sources such as glue guns.
	18	INSPECT: Photo eyes and light curtains for foreign matter.	8		DUST: Use air pressure to blow dust from the photo eyes and light curtains, wipe down only with a soft cloth, photo eye lenses scratch easily! MOISTURE: Use a soft damp cloth, or lenses cleaner to wipe lenses clean of water and deposits
	19	CLEAN: HMI / Touch Screen	Customer Specified		**NOTE**: Touch a corner the screen when cleaning to prevent accidental activation of feature. -Dust: Use a soft damp cloth, or lens cleaner to wipe lenses clean of water and deposits -Tough Stains: Use Isopropyl Alcohol, or window cleaner (preferred), on a soft cloth to clean greases, finger prints, and smudges. Clean with mild detergent or soap with a soft rag afterward.
	20	INSPECT: All wires and sensors for damage and loose fittings.	1,000		Replace or tighten as needed.
	21	CLEAN & INSPECT: Encapsulated transformer cases	1,000		Clean debris from the transformer enclosure. If exposed to harsh environments, inspect for deterioration of coating and holes in enclosure.
	22	CLEAN: Debris from the electrical cabinets	2,500		Use a vacuum to clear debris from heat sinks, drives and bottom of the cabinet. Make sure the electrical cabinet is closed and secured properly.
Gears, Cam Followers, U-Joints	23	LUBRICATE: Universal Joints (washdown application, sealed with boot)	8		With a manual hand pump, pump one shot of grease into the U-joint boot. Recommended Lubricants: Lubriplate Synxtreme FG-2 (Food Grade - NLGL Grade 2) Klüber Klübersynth UH-1 14-151
	24	LUBRICATE: Relubable rod ends with grease zerk	8		With a manual hand pump, pump one shot of grease into the grease zerk. Recommended Lubricants Lubriplate Synxtreme FG-2 (Food Grade - NLGL Grade 2) Klüber Klübersynth UH-1 14-151

	Task		Recom. Hours	Actual Hours	Procedure
	25	INSPECT: Open gears for wear and re-lubricate.	8		Check and lubricate daily. If too much debris is in the gears, clean the gears and then relubricate. Recommended Lubricants: Lubriplate PurTac (Food Grade Open Gear Grease) Klüber Klübersynth 64-1302
Gears, Cam Followers, U-Joints and Bearings	26	LUBRICATE: Running Bearings (Sealed and Non-Sealed)	40		With a manual hand pump, pump one shot of grease into the grease zerk or lube block. *Do not try to overcome resistance or the seals may become ruptured and more frequent lubrication may be required.* Recommended Lubricants: Lubriplate Synxtreme FG-1 (Food Grade - NLGL Grade 1) Klüber Klübersynth UH-1 14-151
	27	LUBRICATE: Plainer (Non-Friction) Bearings	40		Do not need lubrication in most cases, but lubrication can only extend bearing life. Recommended Lubricants: Lubriplate Clearplex-1 (Food Grade - NLGL Grade 1) Klüber Klübersynth UH-1 14-151 (Avoid WD-40, PTFE Sprays, fluorocarbons, and silicon based oils, greases or sprays)
	28	INSPECT: Non-Running Linear Bearings (Thomson, etc.)	160		Inspect the end seals of the bearings for wear and possible contaminates if able. With a manual hand pump, pump one shot of grease into the grease zerk (if able). Recommended Lubricants: Lubriplate Synxtreme FG-1 (Food Grade - NLGL Grade 1) Klüber Klübersynth 64-1302
	29	LUBRICATE: Cam followers	160		Lubricate cam followers with a single shot of grease with a manual grease gun, do not try to overcome resistance or the seals may become blown. Recommended Lubricants: Lubriplate PurTac (Food Grade Open Gear Grease) Klüber Klübersynth 64-1302
	30	LUBRICATE: Cam tracks	160		Lubricate cam tracks immediately if dry. Recommended Lubricants: Lubriplate PurTac (Food Grade Open Gear Grease) Klüber Klübersynth 64-1302 Lubriplate FGL-1 Spray (Food Grade) Klüberfood NH-1 14-222 Spray
	31	LUBRICATE: All bushings	160		Lubricate the bushings by lubricating the shaft they ride on, or using the supplied grease zerk provided. Recommended Lubricants: Lubriplate Synxtreme FG-1 (Food Grade - NLGL Grade 1) Klüber Klübersynth UH-1 14-151
	32	LUBRICATE: Universal Joints (with Lube port)	1,000		With a manual hand pump, pump one shot of grease into the U-joint. Recommended Lubricants: Lubriplate PurTac (Food Grade Open Gear Grease) Klüber Klübersynth UH-1 14-151

Task			Recom. Hours	Actual Hours	Procedure
	33	LUBRICATE: Non-Running Bearings (Sealed and Non-Sealed)	1,000		With a manual hand pump, pump one shot of grease into the grease zerk for bearing used for periodic adjustment. *Do not try to overcome resistance or the seals may become ruptured and more frequent lubrication may be required.* Recommended Lubricants: Lubriplate Synxtreme FG-1 (Food Grade) Klüber Klübersynth UH-1 14-151
Chains	34	LUBRICATE: Flight and Infeed Chains	8		Spray aerosol based lubricants on the plates of the chain while the machine is being jogged, or use a brush to lightly oil the chains. Follow proper safety techniques while lubricating machine. Recommended Lubricants: Lubriplate 20% Silicone Lubricant Spray (Food Grade) Klüber Klüberoil 4 UH1-1500N Spray Lubriplate SFGO Ultra-32 (Food Grade) for Auto-Oiler Klüber Klüberoil 4 UH1-32N
	35	LUBRICATE: Drive Chains	8		Spray aerosol based lubricants on the plates of the chain while the machine is being jogged, or use a brush to lightly oil the chains. Follow proper safety techniques while lubricating machine. Recommended Lubricants: Lubriplate FMO-350-AW Spray (Food Grade) Lubriplate 20% Silicone Lubricant Spray (Food Grade) Klüber Klüberoil 4 UH1-1500N Spray Lubriplate SFGO Ultra-32 (Food Grade) for Auto-Oiler Klüber Klüberoil 4 UH1-32N
	36	INSPECT: Chain Tension (Note: Inspect for chain stretch item #35 while inspecting for chain tension)	160		DRIVE CHAINS: Tighten if loose, adjust take-up by hand until 'snug' NON-CAPTURED FLIGHT CHAINS: At the middle of the flight chain (between the sprockets), grab one of the lugs and lift the chain up until it stops. The chain should not lift more than 3" above the track. CHAINS WITH SPRING LOADED TAKE-UPS: If the spring is flexing while the machine is running, increase the spring pressure 1/2 turn until the flexing stops. Warning! This may be due to other problems as well.
	37	INSPECT: Chain Stretch	160		FLIGHT CHAINS: Checking for uneven spacing between lugs. If spacing is over 1/8" longer than rated flight length, replace immediately. GENERAL: If there is no more take-up adjustment, the chain should be replaced.
	38	INSPECT: Chain Tracks and Chain Strippers for wear	160		Inspect for uneven wear and sprocket alignment. Look for accumulated metal dust, a good sign of chain track wear.
Slideways	39	LUBRICATE: Running INA and ITEM Guides & Rollers	8		Inspect and wipe clean daily, relubricate with a paper towel. If access is limited, apply a drop of oil to each roller. Recommended Lubricants: Lubriplate SFGO Ultra 460 (Food Grade - ISO VG 460)

	Task		Recom. Hours	Actual Hours	Procedure
					Klüber Klüberoil 4 UH1-460N
	40	LUBRICATE: V-Track	8		Inspect and lubricate. If access is limited, apply a drop of oil to each roller. Recommended Lubricants: Lubriplate SFGO Ultra 460 (Food Grade - ISO VG 460) Klüber Klüberoil 4 UH1-460N
Slideways	41	LUBRICATE: Ball Screw Bearings and Shafts	8		Lubricate the shaft immediately below the bearing while it is at the top, this will allow the bearing carriage to draw in the grease. Recommended Lubricants: Lubriplate FGL-1 Spray (Food Grade) Klüber Klüberfood NH-1 14-222 Spray
	42	INSPECT & LUBRICATE: AF Former vertical plunger guide tubes	8		Fill the oil cups on the vertical plunger tubes with oil Recommended Lubricants: Lubriplate SFGO Ultra 32 (Food Grade) Klüber Klüberoil 4 UH1-32N
	43	INSPECT: Transportor Pivot Bars for wear	24		Check that the pivot bars return to their normal position and remain aligned with the gripper bar path, adjust or replace if necessary.
	44	LUBRICATE: Non-Running INA and ITEM Guides and Rollers	40		Inspect and wipe clean, relubricate with a paper towel. Limit excess oil, only a thin film is needed on non-running guides. If access is limited, apply a drop of oil to each roller. Recommended Lubricants: Lubriplate SFGO Ultra 460 (Food Grade - ISO VG 460) Klüber Klüberoil 4 UH1-460N
	45	INSPECT & LUBRICATE: Strongback Ball Spline Shafts and Nuts	160		Inspect the end seals of the spline nut for wear and possible contaminates if able. With a manual hand pump, pump one shot of grease into the grease zerk. Recommended Lubricants: Lubriplate Synxtreme FG-1 (Food Grade - NLGL Grade 1) Klüber Klüberpaste UH1 84-201
	46	LUBRICATE: Tolomatic Servo Driven Linear Actuators	160		For more information, please see the literature in Section 8 - Component Literature of this manual. Recommended Lubricants: Lubriplate FGL-1 Spray (Food Grade) Klüber Klüberfood NH-1 14-222 Spray Loctite Food Grade Anti-Seize (Food Grade) Klüber Klüberpaste UH1 84-201
	47	REBUILD: Hoerbiger Pneumatic Rodless Actuator	8,000		Rebuild the pneumatic actuator according to the manufacturers specifications. Please see Section 8 - Component Literature for the manufacturer's specific instructions.
Gearmotors and Gearboxes	48	LUBRICATE: Tolomatic Float-A-Shaft Gearboxes	80		With a manual hand pump, pump one shot of grease into the gearbox. Recommended Lubricants: Lubriplate Synxtreme FG-2 (Food Grade - NLGL Grade 2) Klüber Klübersynth UH-1 14-151

	Task		Recom. Hours	Actual Hours	Procedure
	49	INSPECT: Gearboxes and Gearmotors for proper oil level	160		Check the oil level per manufacture's specifications. Consult the manufacturers manual in Section 8 of this manual for proper level.
	50	INSPECT: Van der Graaf drum motors for proper lubrication	160		Rotate the drum motor until the arrow is facing up on the motor itself. Remove the oil plug, the oil level should be to the bottom of oil plug. For more information, please see the literature in Section 8 - Component Literature of this manual.
Gearmotors and Gearboxes	51	LUBRICATE: Gearboxes, Gearmotors, Phase Variators, and Van der Graaf drum motors	***		Follow the instructions provided by the manufacturer for the gearbox, copies of these manuals are in Section 8 of this manual.***NOTE****: Some gearboxes do not require re-lubrication, make sure to indentify these gearboxes, these are not called out on the lube points.* Recommended Lubricants: Lubriplate SFGO Ultra 460 (Food Grade - ISO VG 460) Klüber Klüberoil 4 UH1-460N Lubriplate SFGO Ultra 220 (Food Grade - ISO VG 220) Klüber Klüberoil 4 UH1-220N Lubriplate SFGO Ultra 150 (Food Grade - ISO VG 150) Klüber Klüberoil 4 UH1-150N
Adjustments	52	INSPECT: Strongback screw shafts & supports for proper lubrication	1,000		Lubricate the adjustment and support shafts and then crank the strongback in and out to spread the lubricant. Recommended Lubricants: Lubriplate Synxtreme FG-1 (Food Grade - NLGL Grade 1) Klüber Klüberpaste UH1 84-201 Loctite Food Grade Anti-Seize (Food Grade) Markal E-Z Break Anti-Seize
	53	LUBRICATE: Machine Adjustment Chains	1,000		Spray a light film for corrosion resistance and light lubrication Recommended Lubricants: Lubriplate Food Grade Silicone Spray (Food Grade) Klüber Klüberoil 4 UH1-1500N Spray Lubriplate FMO-350-AW Spray (Food Grade)
Miscellaneous	54	INSPECT: Automatic Oil Lubrication Systems	Customer Specified		Check the tank level to make sure there is lubricant in the tank. Recommended Lubricants: Lubriplate SFGO Ultra 32 (Food Grade - ISO VG 32) Klüber Klüberoil 4 UH1-32N **NOTE**: If both the bearings and the chains are being lubricated by the same oil pump, it is recommeded that a 40W gear oil or ISO 150 gear oil be used instead. Recommended Lubricants: Lubriplate SFGO Ultra 150 (Food Grade - ISO VG 150) Klüber Klüberoil UH1-150N
	55	INSPECT: Automatic Grease Lubrication Systems	Customer Specified		Check the tank level to make sure there is lubricant in the tank. Recommended Lubricants: Lubriplate Synxtreme FG-1 (Food Grade - NLGL Grade 1) Klüber Klübersynth UH-1 14-151
	56	MAINTAIN: Nordson Glue System	-		Consult Section 5 of the Nordson "Customer Product Manual" or call Nordson Customer Service at 1-800-241-8777

Task			Recom. Hours	Actual Hours	Procedure
	57	MAINTAIN: Morrison CHS Feed Screw Drive Systems	-		Consult the Morrison CHS Timing Screw Drive Systems manual if equipped in Section 8 of this manual for instructions
	58	INSPECT: Complete Machine for worn, damaged, or loose parts	40		Replace or tighten as needed (Not limited to lugs, sprockets, tuckers, gearboxes, bearings, guides, tracks, belts, shock absorbers, etc.)
Miscellaneous	59	INSPECT: Morse clutches for proper lubrication	1,000		Inspect shafts proper lubrication Recommended Lubricants for Grease Lubricated Models: Lubriplate PurTac (Food Grade Open Gear Grease) Klüber Klübersynth UH-1 64-1302 Recommended Lubricants for Oil Lubricated Models: Jax FGH-AW ISO 48 Hydraulic Fluid (Food Grade) Klüber Klüberoil NH-1 SUH 4-46 US
	60	INSPECT: All lube lines for blockages and loose fittings	2,000		Replace and repair as needed

Lube Points

Item #1: Group Lube Block

Item #2: Group Lube Block

Item #3: Conveyor Group Lube Block

Item #4: Upstream Bearing Blocks

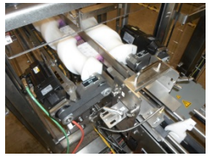
Item #5: Downstream Bearing Blocks

Item #6: Magazine Machine Screws

Item #7: Hopper INA Guides

Item #8: Product Conveyor

Item #9: Transfer Shaft Lube Block

Item #10: Transfer Flange Bearing

Item #11: Transfer INA Guide

Item #12: Rotary Drive Sprocket Mount

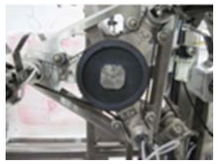
Item #13: Rotary Cam Followers

Item #14: Rotary INA Guides

Item #15: Rotary Machine Screw

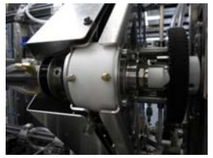
Item #16: Rotary Vacuum Arms

Item #17: Transfer Drive Spline

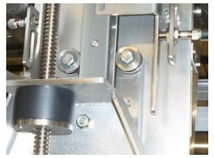
Item #18: Overhead Conveyor INA Guides

Item #19: Overhead Flange Bearing

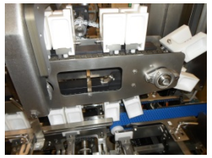
Item #20: Overhead Flange Bearing

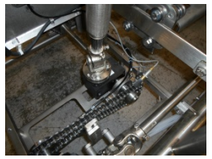
Item #21: Overhead Drive Spline

Item #22: Overhead Drive Idler

Item #23: Overhead Tuck Wheels

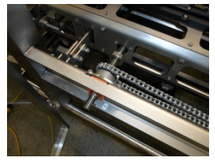
Item #24: Side Closing Chain Bearings

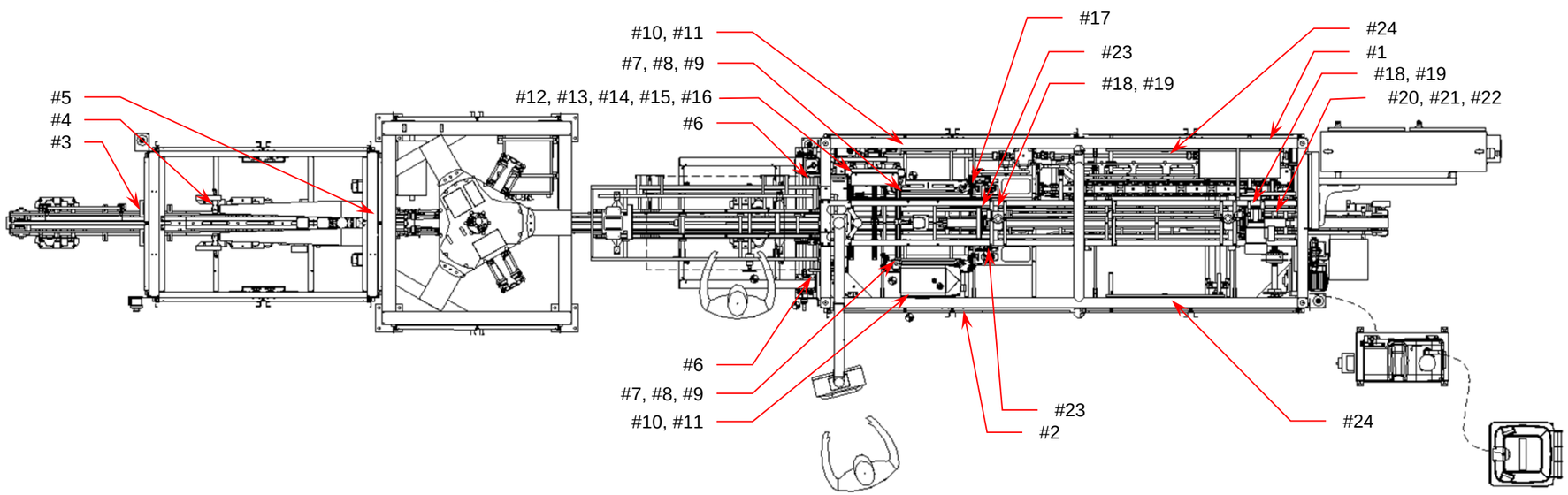

Lubricating INA Roller Guides

The time intervals between lubrication and the quantity of lubrication vary from one customer application to another. Factors that can affect lubrication intervals include facility environment, machine speed, length of travel, and sanitation requirements (washdown). *Re-lubrication must be carried out at the latest when fretting corrosion occurs.* This can be identified by a reddish discoloration of the guide rods or the outer ring of the rollers. If lubrication is not carried out until this point, future lubrication intervals must be shortened (more often).

Supplied INA Guide Lubricant

Optional INA Guide Wiper Lubricator

Recommended Lubricants:

Lubriplate SFGO Ultra-460 (Small Bottle is provided)

Klüber Klüberoil 4 UH1-460N

-or-

Any lubricating gear oil with a ISO viscosity of 460

Procedure:

- Wipe down rails to remove any foreign matter.
- Apply Oil to a paper towel and wipe onto the full length of the guide rods.

-or-

- If the guide rods are difficult to access, apply a drop of oil to each roller. Then cycle the machine or roller carriage back-and-forth to distribute the oil onto the guide rods.

It is recommended that the INA Roller Guides be lubricated once daily at a minimum (see the Preventative Maintenance Schedule on Page 3-2). If fretting corrosion begins to occur within that time, then more frequent lubrication will be required.

For questions, please see contact After Market Support

Tel: 559.875.5563 | Fax 559.875.7665

Glue System Filter Location / Maintenance**

***Adapted from Section 5-6: Replacing the Filter, from Section 5 of the Nordson Manual. For more information on the Nordson Hot Melter, please consult the manual that came with the machine.*

WARNING: To change the filters, the glue melter and guns are required to be powered up and at operating temperature. Take care and use proper protective equipment to avoid burns when removing the glue filters.

Melter Glue Filter – ProBlue 4, 7, and 10 Series

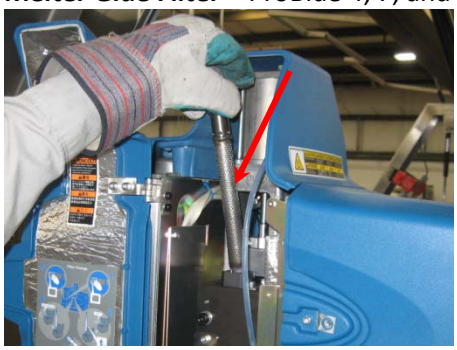

The glue melter filter is located in the pump compartment of the glue melter. The filter shown above, is removed with a 8mm Allen wrench, or an adjustable end wrench.
Filter replacement instructions are located on the inside of the pump compartment door, and Section 5-6: Replacing the Filter of the Nordson Manual.

Glue Gun Filter

Located just upstream of the Glue Gun.

It is removed with a 1/2” inch wrench.

Melter Air Filter

1. First remove the filter casing from the melter.
2. Unscrew the protective cover from the filter base.
3. Pull the filter bowl from the filter base.
4. With a Philips Head screw driver, remove the filter retaining screw.
5. Remove filter.
6. Clean or replace the filter.

Chapter 4 – Operation

This Chapter of the Service Manual covers standard operation of the machine, including the controls, start-up and shut-down procedures and information on the various sensors.

Table of Contents

Chapter 4 – Operation 4-1
- Start-Up Procedure 4-4
- Fault Re-Start Procedure 4-5
- Shut-Down Procedure 4-6
- Description of Operation 4-7
- Main Control Panel 4-15
- Remote Control Panel 4-16
- Machine Mode Descriptions 4-17
- HMI Screens 4-19
  - Basic Controls 4-21
    - Magazine Advance 4-23
    - Overhead Adjustment 4-24
    - Blow-Off 4-26
    - Glue Pressure 4-27
    - Lube Controls 4-28
    - Grease Controls 4-29
  - Mode Selection Tab 4-30
  - Recipe Select Tab 4-31
    - Recipe Changed Warning Pop-Up 4-33
    - Recipe Glue Edit Screens 4-34
    - Recipe Copy Warning Pop-Up 4-36
    - Recipe Basic Setup 1 4-37
    - Recipe Basic Setup 2 4-39
    - Recipe Basic Setup 3 4-41
    - Recipe Robot Screen 4-42
    - Robot X, Y and Z Axis Direction Graphical Display 4-44

Recipe Manipulation Procedures 4-45
Editing a recipe 4-46
Copying a recipe 4-47
Deleting and inserting 4-49
User / Info Tab 4-50
Diagnostics Banner 4-51
PackML Tab 4-53
Login Tab 4-55
Alarm History Tab 4-56
Status Tab 4-59
Discrete I/O Input Status Tab 4-60
Discrete Output Status Display 4-61
Servo Axis Status Screen 4-62
VFD Status Tab 4-63
Machine Faults Tab 4-65
Machine Speed Tab 4-66
Machine Setup Tab 4-67
Position Based Controls Tab 4-68
Machine Parameters 4-70
Servo Axis Settings Tab 4-72
PowerFlex 525 Settings Tab 4-74
Hopper Advance Tab 4-76
Device Manual Control Selection Screen 4-77
Manual Control Output 4-78
Manual Control VFD 4-79
Manual Control Servo 4-81
Emergency Stop Locations 4-83
Guard Door Interlocks 4-84
Photo Eye Types and Descriptions 4-85
Proximity Sensors and Photo Eyes 4-86
Torque Limiting Clutch 4-89
Four Color Stack Light 4-90

Glue System 4-91

Start-Up Procedure

This machine was thoroughly tested at the factory prior to shipment.
After proper installation, the machine should be ready for operation.

1. Before starting the machine:
   a. Make sure there are no tools left in the machine.
   b. All personnel should be clear of the machine.
   c. All guard doors closed.
2. Turn the Air Lock-Out Valve to the ON position, it will display SUP in the On position, on the machine FRL.
3. Turn the Main Electrical Disconnect to ON, it will be in the Red Area on the Disconnect Switch. With power turned on, the controls will start activating, including the beacon light and the various sensors.
4. Turn the Glue Unit ON at the Glue Unit Disconnect if it is turned off, or ON at the Unit itself.

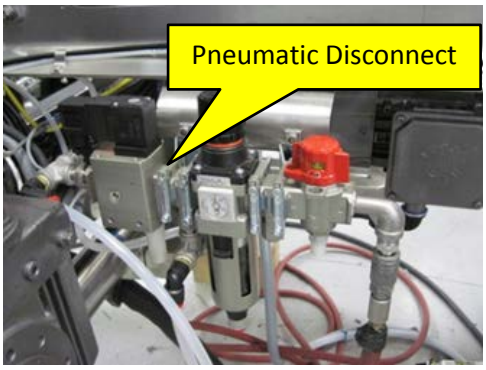

5. Wait the for the Glue Unit to come up to temperature, approximately 20 – 30 minutes depending on the Hot Melt operating Temperature (Skip this step if the seven day programmable timer has been set, see Nordson Manual for more details).
6. The Main Control Screen will appear on the HMI Screen when it's ready to accept commands.

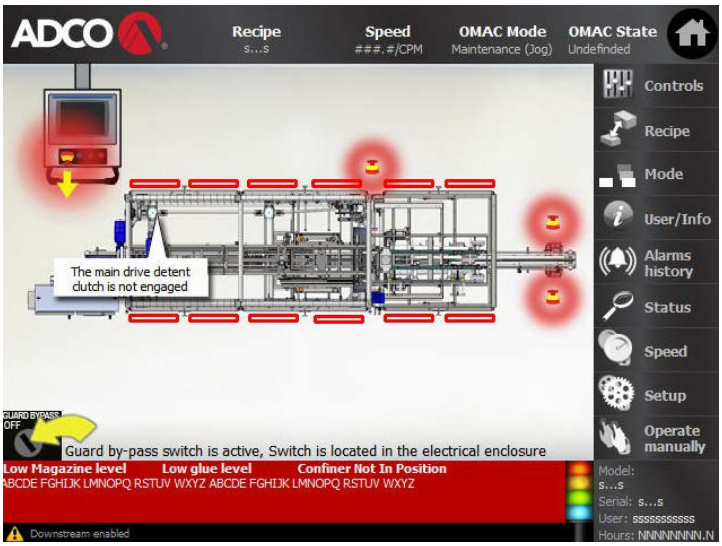

7. Load the Hopper with a significant amount of sleeves for the run time desired.
8. Walk around the machine checking that all Emergency Stops are up (lights off), and that all Guard Doors are closed. NOTE: The Red Beacon Light will flash along with a Message on the HMI Screen.
9. Call out “Clear” to warn others that the machine is being started.
10. Press and hold the Start-Button for three seconds and the machine will start operating.
11. If the Vacuum and / or Glue are not automatically activated, go to the Operators Station Screen and press them until they are ENABLED (Or green).

Fault Re-Start Procedure

In the event that the machine stops due to a fault or an alarm, use the following procedure to get the machine back up and running quickly.

1. Inspect the machine for jams and make sure they are removed.
2. Remove all unglued sleeves from the machine.
3. Close all guard doors and lift all Emergency Stops.

4. Press the Reset Button.
5. Press and hold the Start Button until the machine begins motion.

Some conditions need extra attention, check the Alarm Pop-Up Banner and Condition / Fault Screen write up on Page 4-19 for more details on the clear faults.

Shut-Down Procedure

To properly shut-down the machine:

1. Halt the flow product into the machine.
2. Before shutting down the machine, run all of the sleeves and product through the machine.
3. When the indexing screws stop to lack of product, block the eye just upstream of the screws.

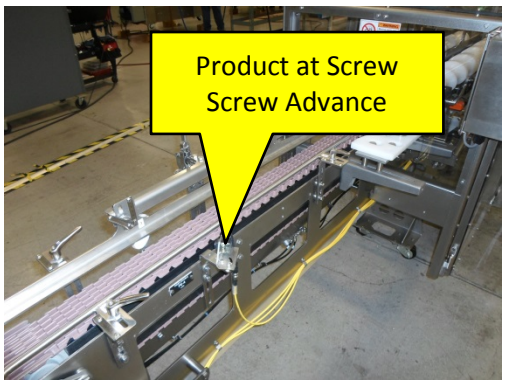

4. The remaining product should feed through the machine and then have nothing in the screws.
5. Unblock the Indexer Enable Eye.
6. Press the Stop Button, the machine will come to a stop.
7. Switch the Electrical Disconnect to the OFF position.
8. Switch the Air Lock-Out Valve to the EXH position.

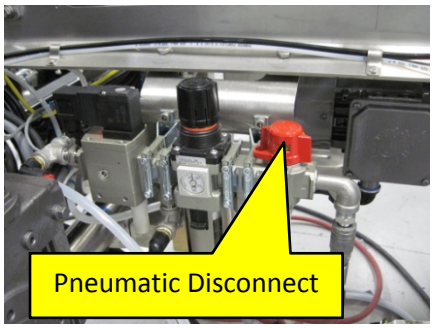

Description of Operation

ASSUMPTION: All pictures and steps in this Machine Operation are shown consecutively, unless otherwise stated. This shows the progress of the progress of the blanks to the discharge of the machine. The blanks shown here are for shown for illustrative purposes only.

With the controls activated, and the Hopper filled with the proper Sleeves and the Hopper Block in place, the machine is ready to start.

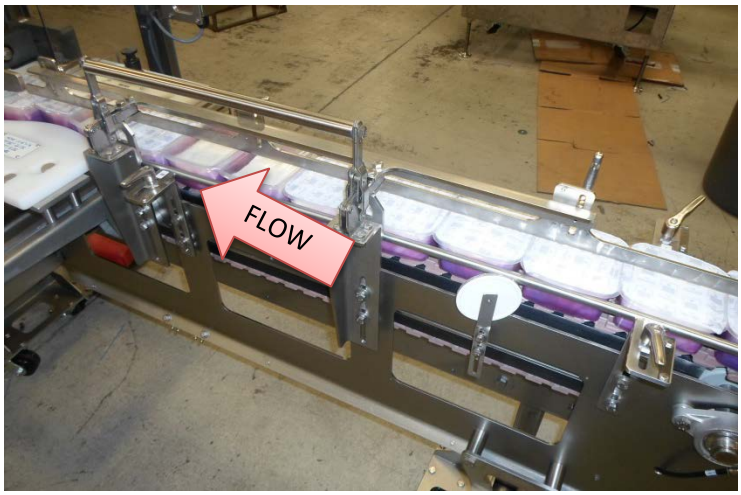

Product enters the infeed conveyor from the customer's upstream supply line.

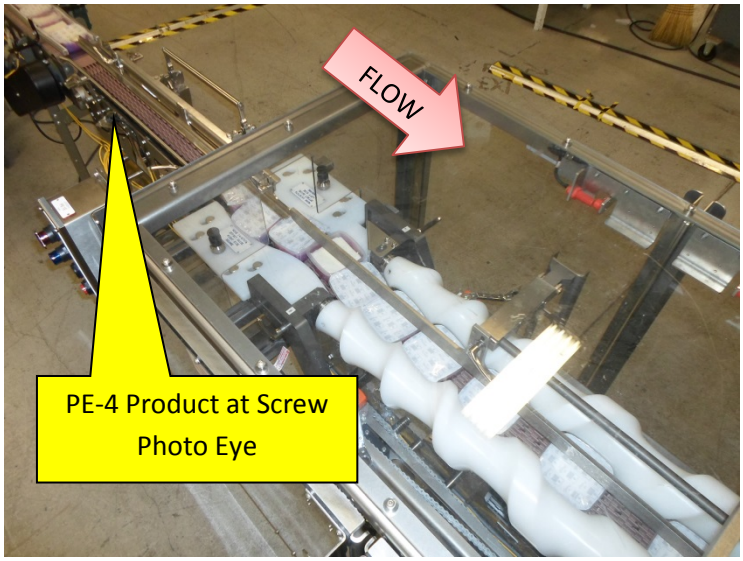

When the product enters the infeed conveyor, it blocks the Infeed Enable Photo Eye. The machine then begins to index product into the indexer.

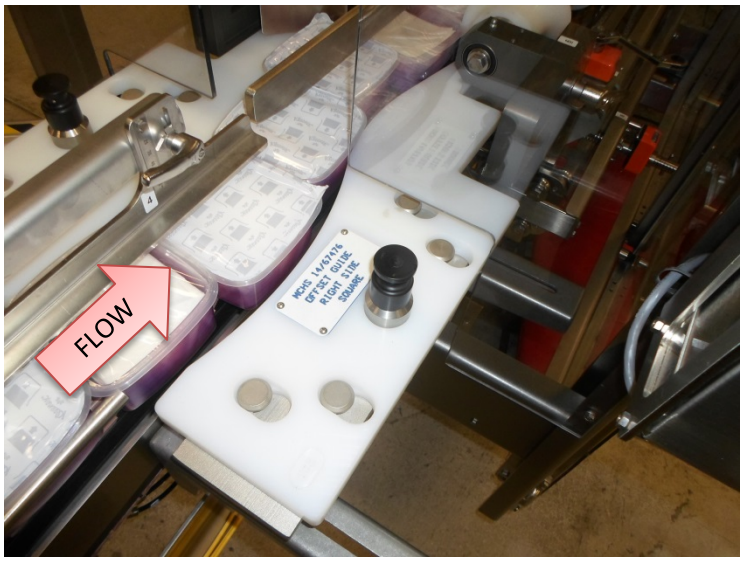

The product passes through the offset guides to allow the indexing screws to properly index the product by offsetting the square product.

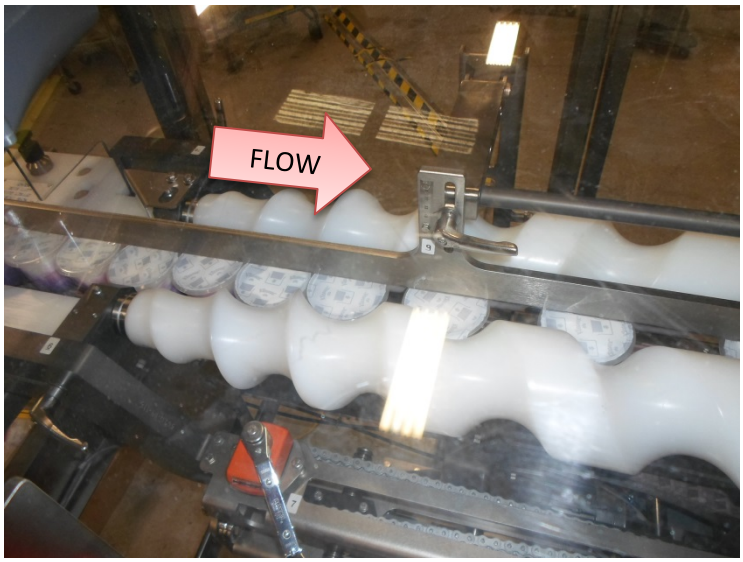

Round product passes through the offset guides strait.

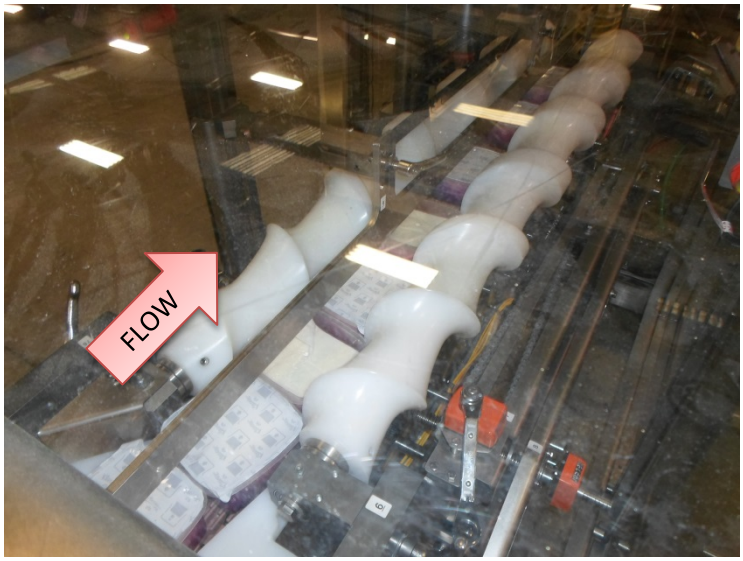

The indexing screws then space the product for placement on the main product conveyor.

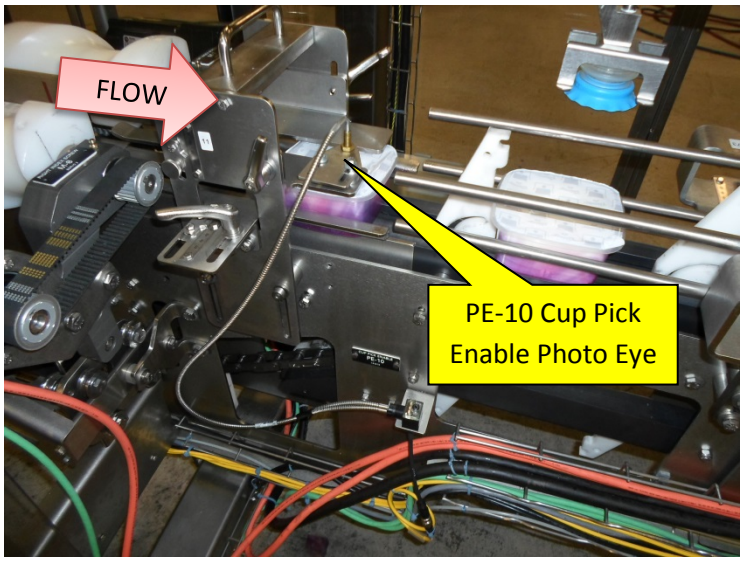

After the product is indexed, they pass by the PE-10 Cup Pick Enable Photo Eye.

If the recipe and machine is set for a double pack, the stacker will begin stacking product.

If a single pack, the product will pass through to the main machine.

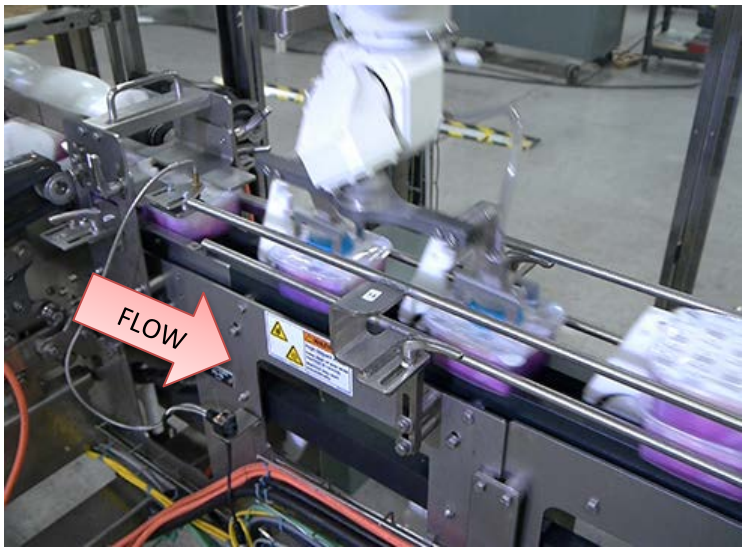

If double stacked, the stacker will pick two products from the conveyor.

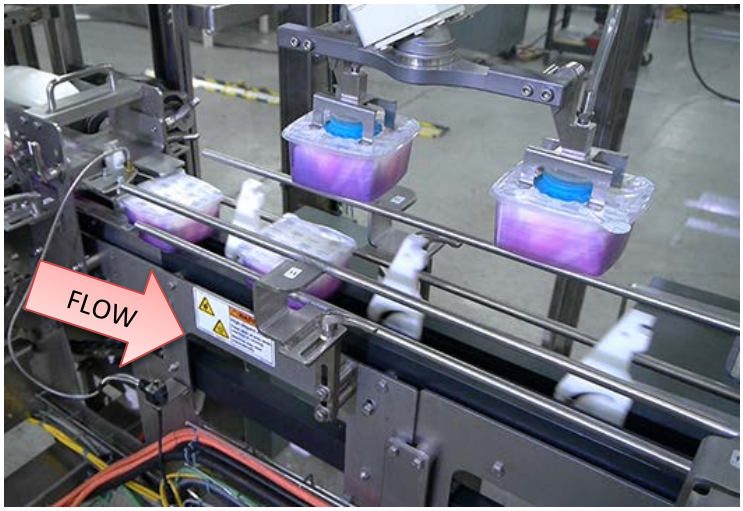

Once the products are picked, the stacker waits for two products to pass under the PE-10 Cup Pick Enable Photo Eye in sequential order.

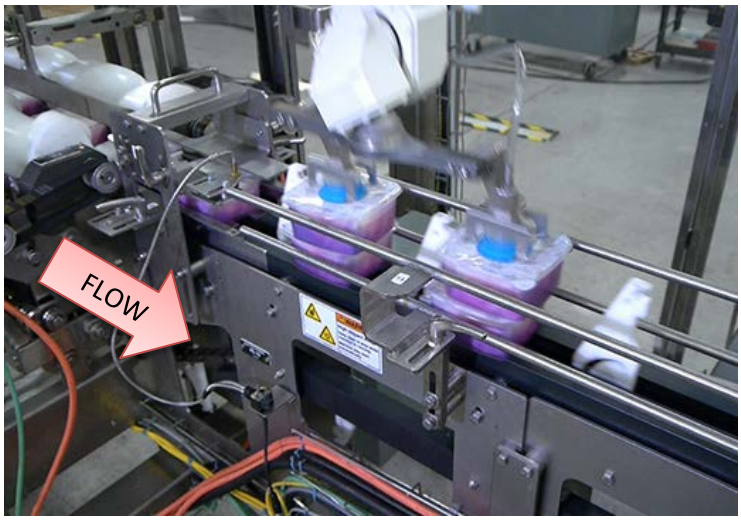

The stacker then places the products on the two other products to complete the double stack.

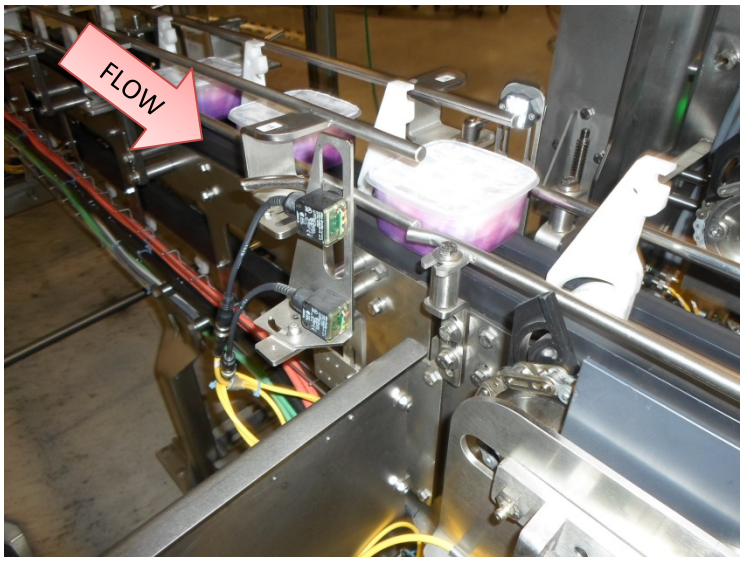

The product passes by the PE-1A and PE-1B Product Present Photo Eyes. If the wrong product configuration is detected, the machine will not pick a sleeve.

When the proper configuration is detected, the vacuum is enabled.

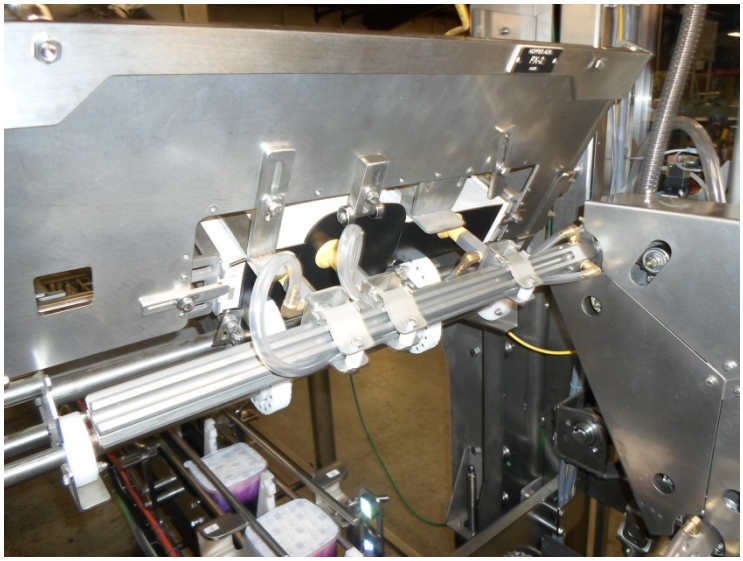

The feeder picks a sleeve from the magazine.

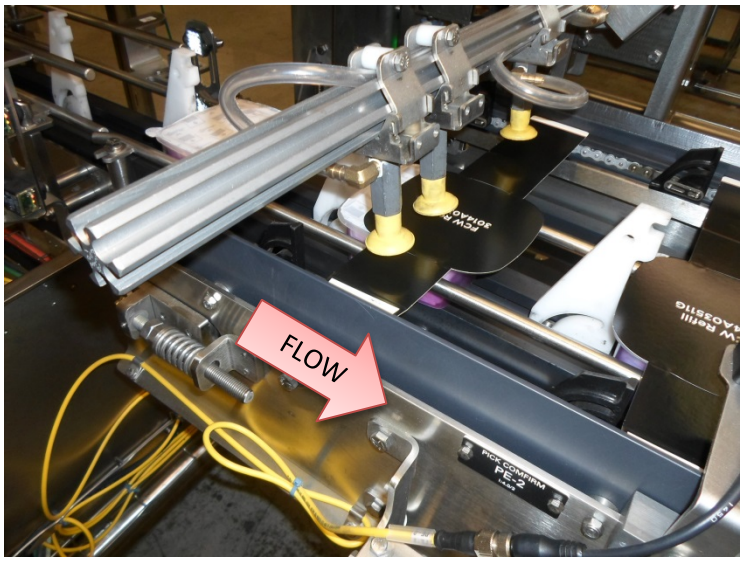

The feeder places the sleeve onto the product and transfer chains.

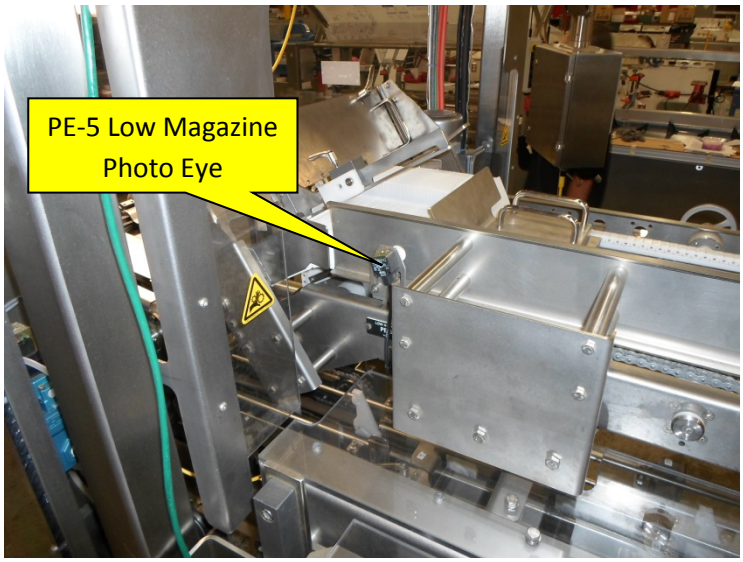

As the Sleeves are picked from the Magazine and the PE-5 photo eye becomes unblocked, a signal is sent to the Stack Light as well as the control screen notifying the operator of a Low Magazine State.

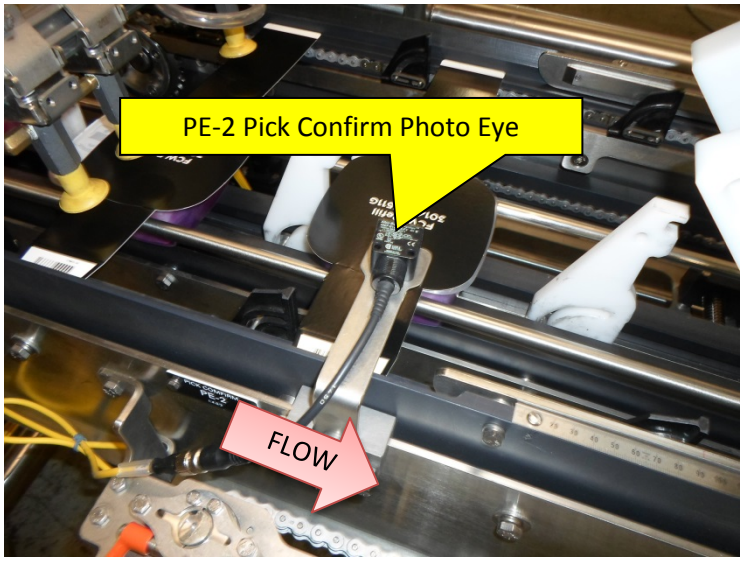

The PE-2 Pick Confirm photo eye is blocked, if three picks were queued, but none confirmed the machine will come to a stop to allow the operator to fix the issue.

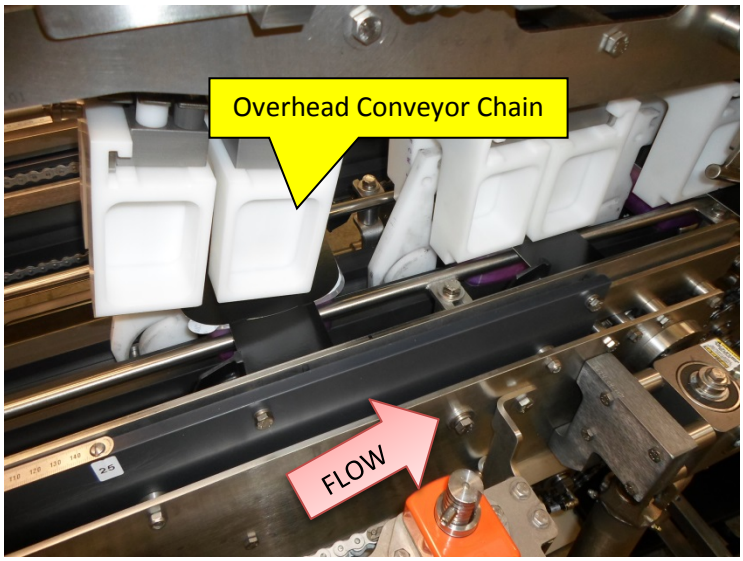

The product and sleeve enter the Overhead Conveyor Lugs.

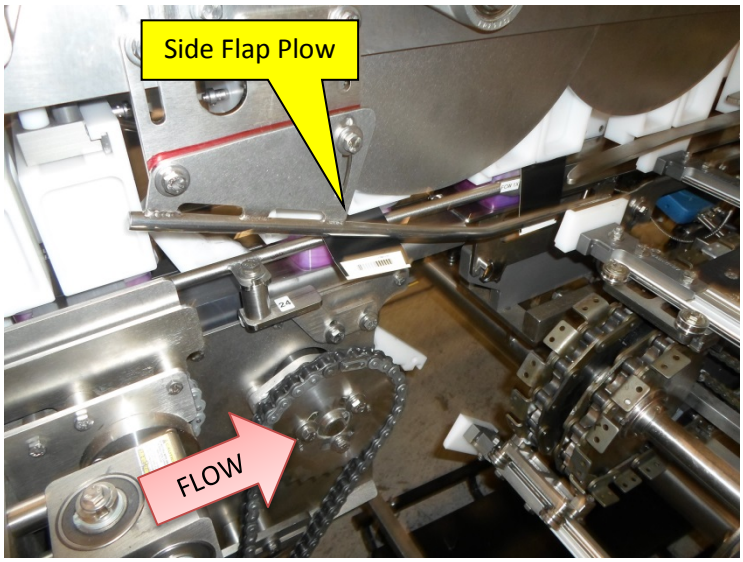

The Short Flap and Long Glue Flap are plowed down by the Side Flap Plows.

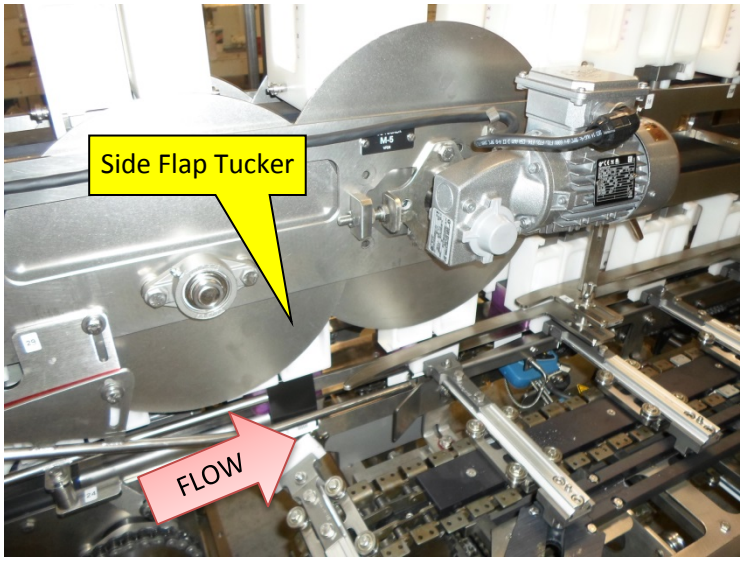

The Short Flap and Long Glue Flap are held down by the Side Flap Tucker.

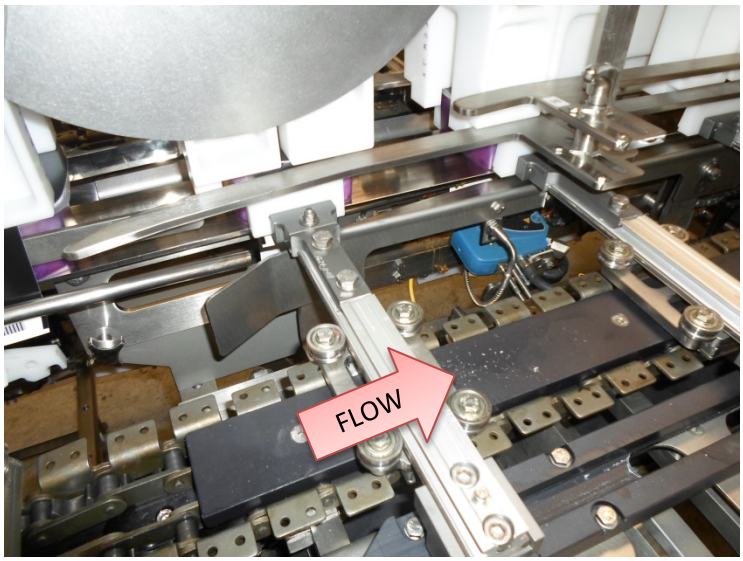

Traveling side compression arms help hold the sides of the sleeves in with constant pressure and help push the sides until the sleeve is sealed closed.

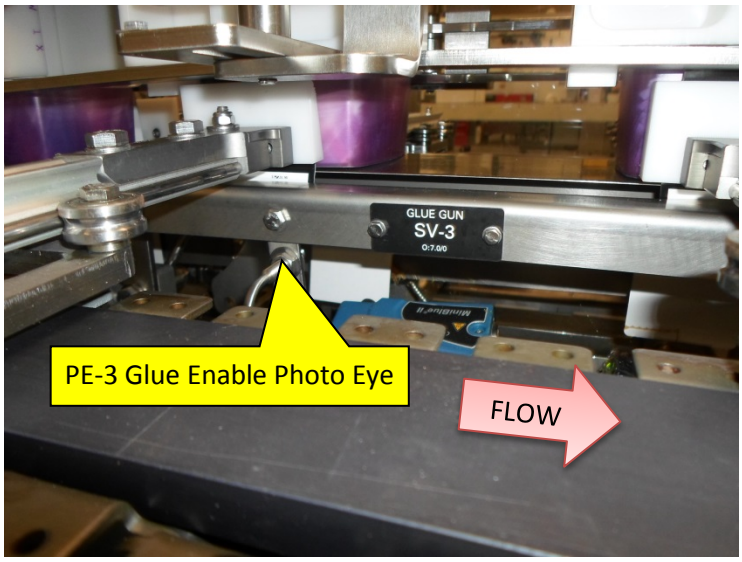

The Short Flap is plowed closed, and the Long Flap blocks the PE-3 Glue Enable photo eye, enabling the Glue Gun to apply glue.

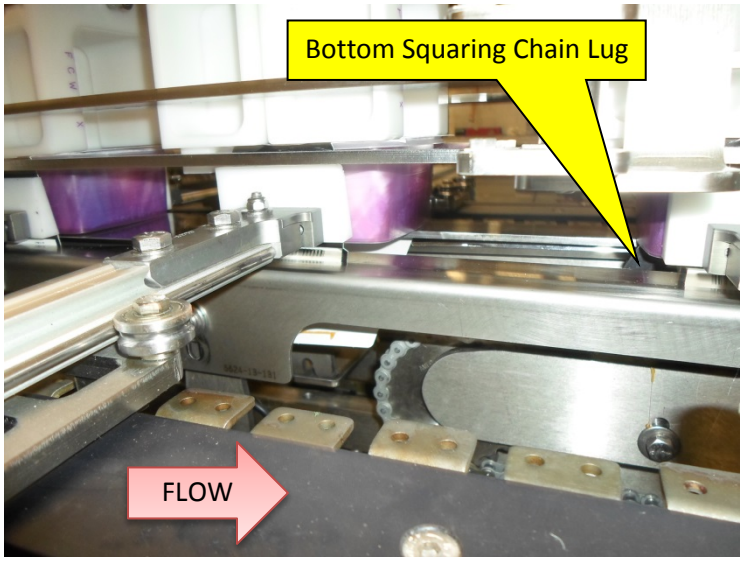

Long glue flap is plowed closed against the closed short flap. The squaring chain then keeps pressure against the sleeve to keep it square by preventing drag back.

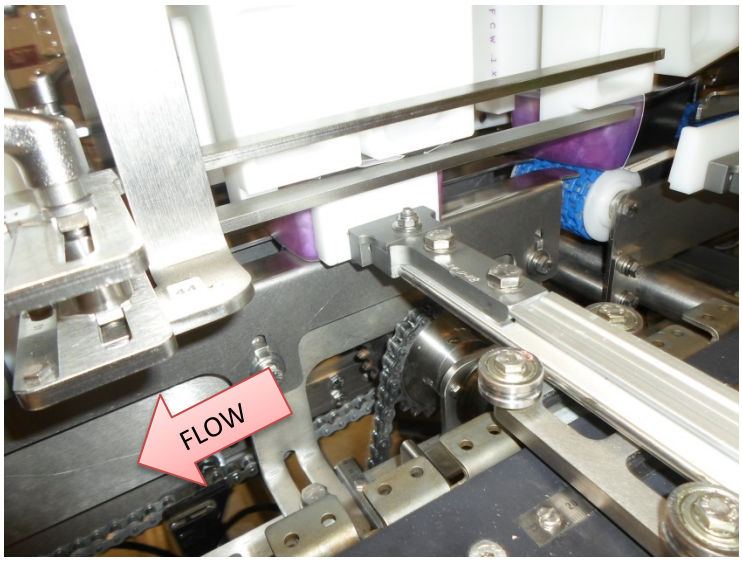

The closed sleeve enters the compression rails where the glue is compressed and allowed to cool.

The product with the glued Sleeve exits the Overhead Conveyor and enters the Discharge Conveyor.

Main Control Panel

The Control Panel contains most of the controls needed to operate the machine, and it contains the HMI Touch Screen, Start and Stop Controls, and Emergency Stop and Reset Buttons.

Panel View Plus 1000 HMI – This control screen interface holds most of the machine controls. These controls include Glue Off / On, Vacuum Off / On and other miscellaneous controls.

Reset Button – The Reset Button is for resetting the control functions when a machine fault or emergency stop has been activated. When machine functions have been changed, the reset button must be used to reset the machine for it to be restarted.

Start Button – The Start Button engages the main drive and sets the machine in motion. Follow the recommended Start-Up Procedure on page 4-4 for a safe start-up.

Stop Button – The Stop Button brings the machine to a halt after one complete cycle, and maintains vacuum to the picking system. Use this button to stop the machine under normal conditions.

Emergency Stop Button – The Emergency Stop button terminates power and air pressure to the machine when pressed. Use the Emergency Stop button any time there is an emergency (such as a carton jam) or when someone must reach into the machine, or under it. When activated, the button becomes lit, pulling it back up will deactivate it for starting the machine.

NOTE: Do not use for normal stopping of the machine.

Remote Control Panel

The Remote Control Panel contains the basic start and stop controls to quickly restart the machine from this location.

Reset Button – The Reset Button is for resetting the control functions when a machine fault or emergency stop has been activated. When machine functions have been changed, the reset button must be used to reset the machine for it to be restarted.

Start Button – The Start Button engages the main drive and sets the machine in motion. Follow the recommended Start-Up Procedure on page 4-4 for a safe start-up.

Stop Button – The Stop Button brings the machine to a halt after one complete cycle, and maintains vacuum to the picking system. Use this button to stop the machine under normal conditions.

Emergency Stop Button – The Emergency Stop button terminates power and air pressure to the machine when pressed. Use the Emergency Stop button any time there is an emergency (such as a carton jam) or when someone must reach into the machine, or under it. When activated, the button becomes lit, pulling it back up will deactivate it for starting the machine.

NOTE: Do not use for normal stopping of the machine.

Machine Mode Descriptions

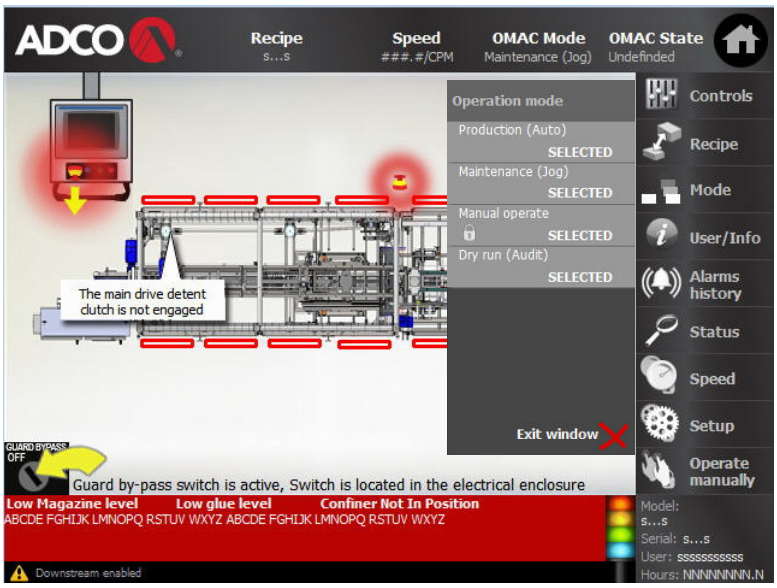

The HMI Screen has different operating modes that have their own capabilities. If the machine appears to be not responding correctly, it may be in the wrong mode of operation. After changing to a different mode, the Reset Button is required to be pressed before operation the machine in that mode.

There are four modes of operation:

Production Mode (Auto) – This mode allows normal operation of the machine by access levels including default. It allows operators to the machine in normal fashion.

- This is the default mode when the machine is first turned on.
- The vacuum and glue are automatically turned on when the Start Button is pressed.

Maintenance Mode (Jog) – This mode requires a user login.

- The whole machine is jogged in this mode.
- The Start Button needs to be consistently pressed in order for the machine move at Jog Speed (See the speed selection screen).
- If the Jog Cord is plugged in, the Start Button is disabled and only the Jog Cord can be used for jogging for safety purposes.
- Maintenance Mode is only available to Maintenance (B), Supervisor (C), and Engineering Level (D) level users. This function is locked out from Operators.

Manual Mode – This requires a user login.

- Only individual devices can be jogged in this mode.
- This mode is required to time in servos and other devices.
- Manual Mode is only available to Engineering (D) level users. This function is locked out from Operators.

Dry Run Mode – This requires a user login.

- When the machine is started, the machine will run simulating cases and product being loaded.
- Used for run testing of the machine of the machine and components installed.
- Washdown Mode is only available to Maintenance (B), Supervisor (C) , and Engineering (D) level users. This function is locked out from Operators.

HMI Screens

NOTE: The settings that appear across the following screens may or may not be the actual settings as shipped from our factory. If you're looking for the actual settings for your machine, please check the Machine Factory Settings at the beginning of Chapter 5 – Adjustments, in this manual.

All of the buttons and options stem off of the main screen. Some options are not available unless the user is logged in under the proper authentication level. Locked out options will have a small lock placed on the icon, and will also be greyed out.

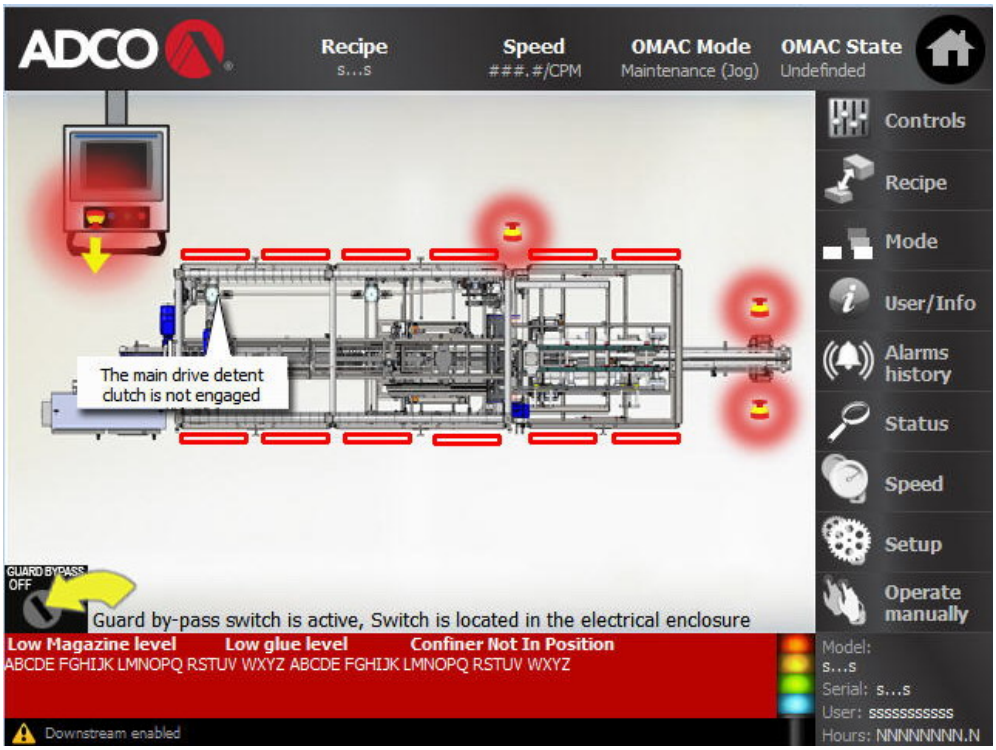

Recipe – Displays the current running recipe on the machine.

Speed – Displays the current speed of the machine in Cartons per Minute.

Mode – Displays the current mode the machine is set to.

User – Displays the current level the user is logged in under.

State – Displays the PackML State the machine is currently in.

Here is the list of Statuses:

Guard Statuses:

- Red – If a guard status is red, it means the guard switch is not closed or contacting. If the guard door is closed, check the guard door switches to see that they are being made.

Emergency Stop Statuses:

- Red – An Emergency Stop is activated and lit. Turn to release and lift.

Basic Controls

The Basic Controls Tab gives access to the most basic controls for operating the machine. They include Glue and Vacuum ON / OFF, and some manual pick and manual hopper controls.

NOTE: I and O are used for representing ON and OFF, examples include:
I – Used to represent ON, Enabled, or Input Detected.
O – Used to represent OFF, Disabled, or No Input Detected.
These are true for all of the screens in which they are used.

Glue Pattern – Enables or disables the glue to the carton.

Vacuum System – Enables or disables the vacuum pump and prevents the feeder from picking cartons.

****Vacuum Timed Out** – If the machine is not running after 30 Minutes, the vacuum pump, if equipped will turn off until the machine is started again.

Manual Pick Cartons – Overrides the pick eye and forces the feeder to pick a carton, will continue to pick cartons while the button is pressed.

Downstream Photo Eye – Enables and disables the Downstream Photo Eye.

Enabled – When the downstream photo eye becomes blocked, the machine will come to a stop based on the ON timer (Machine Setup Tab→Machine Parameters).

Disabled – The machine will run normally, ignoring all downstream conditions.

Pin Indexer Mode – Switches between OFF, Manual and Automatic Modes

Off – The Infeed Conveyor will not turn on.

Manual – The Indexer will turn on and run the machine at the speed indicated on the Manual Speed Button.

Automatic – The Indexer will turn on and use the photo-eyes to set the speed to run and when to turn on.

Machine Change over Position – Provides two functions while the machine is in Changeover Mode:

First press – Moves the Fanuc Robots to a convenient "changeover" position, and lifts the overhead conveyor to a high enough position to allow "changeover" of the lugs.

Second, Press and Hold for 2 Seconds – Moves the main machine so the overhead conveyor is cycled so the other half of the lugs are available for "changeover".

Magazine Advance

Controls the magazine advance chains.

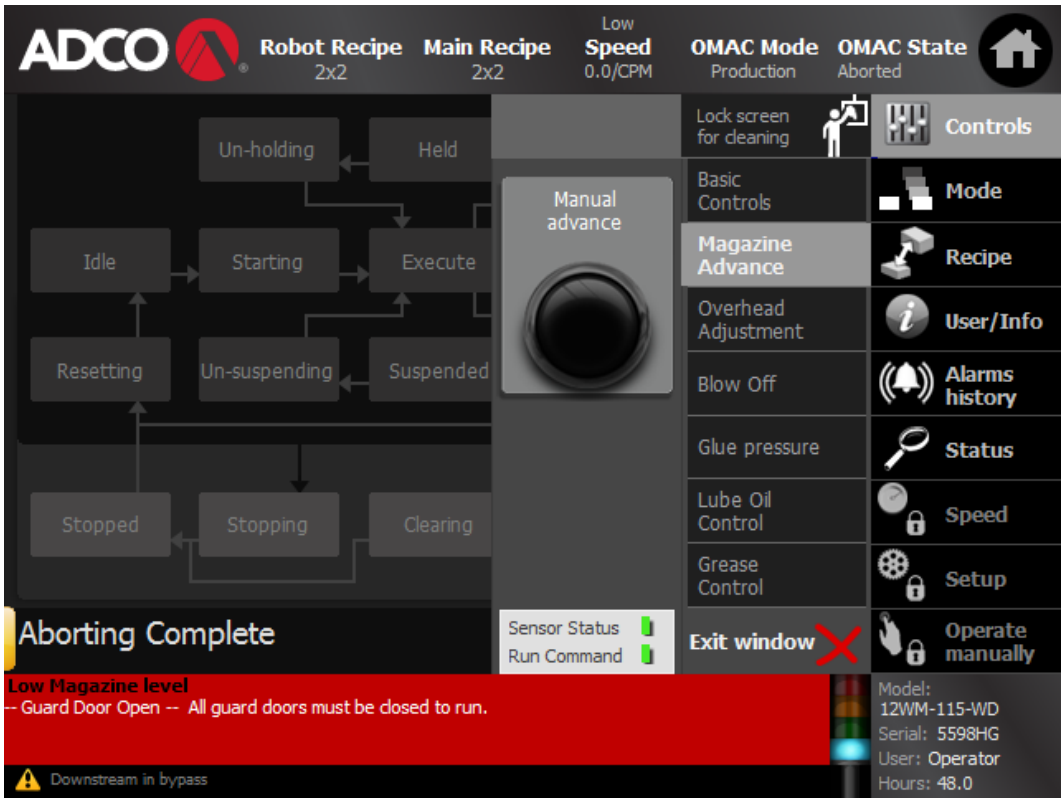

Manual Advance – While pressed, the magazine advance chains will move the sleeves toward the hopper.

Overhead Adjustment

Controls the running height of the Overhead Conveyor and allows the operator to raise and lower it, such as for small adjustments for running or clearing a jam.

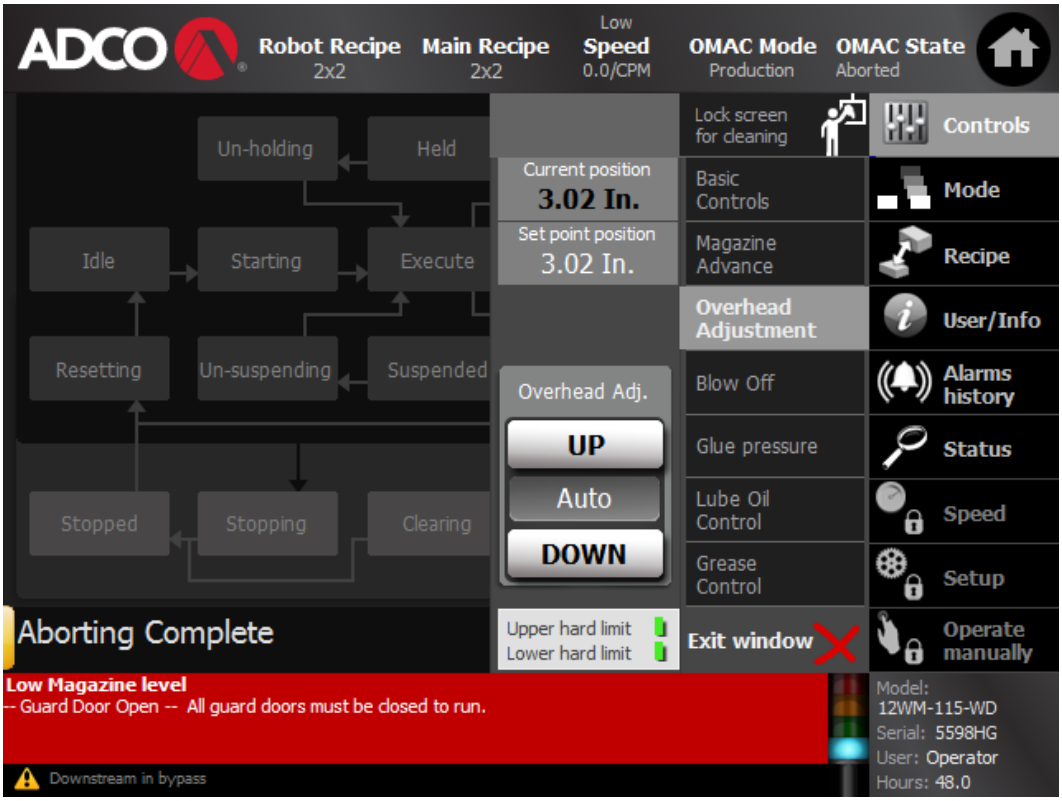

Current Position – Displays the Overhead Conveyor's current position in Inches.

Set point position – Displays and sets the running position of the Overhead Conveyor.

Overhead Adjustment – Changes the position of the overhead squaring chain.

Up – Raises the Overhead Conveyor while it is held.

Auto – The Recipe, when loaded, will set the position automatically.

Down – Lowers the Overhead Conveyor while it is held.

Upper Hard Limit – Indicates either of the following.

Green – The Overhead Conveyor is set to a safe position.

Red – The Overhead Conveyor is set too high and the Upper Limit Proximity Switch has stopped it from traveling too far up.

Lower Hard Limit – Indicates either of the following.

Green – The Overhead Conveyor is set to a safe position.

Red – The Overhead Conveyor is set too low and the Lower Limit Proximity Switch has stopped it from traveling too far down.

Blow-Off

Enables or Disables the air blow-off nozzles for ejecting product from the indexer or after the product has been sleeved.

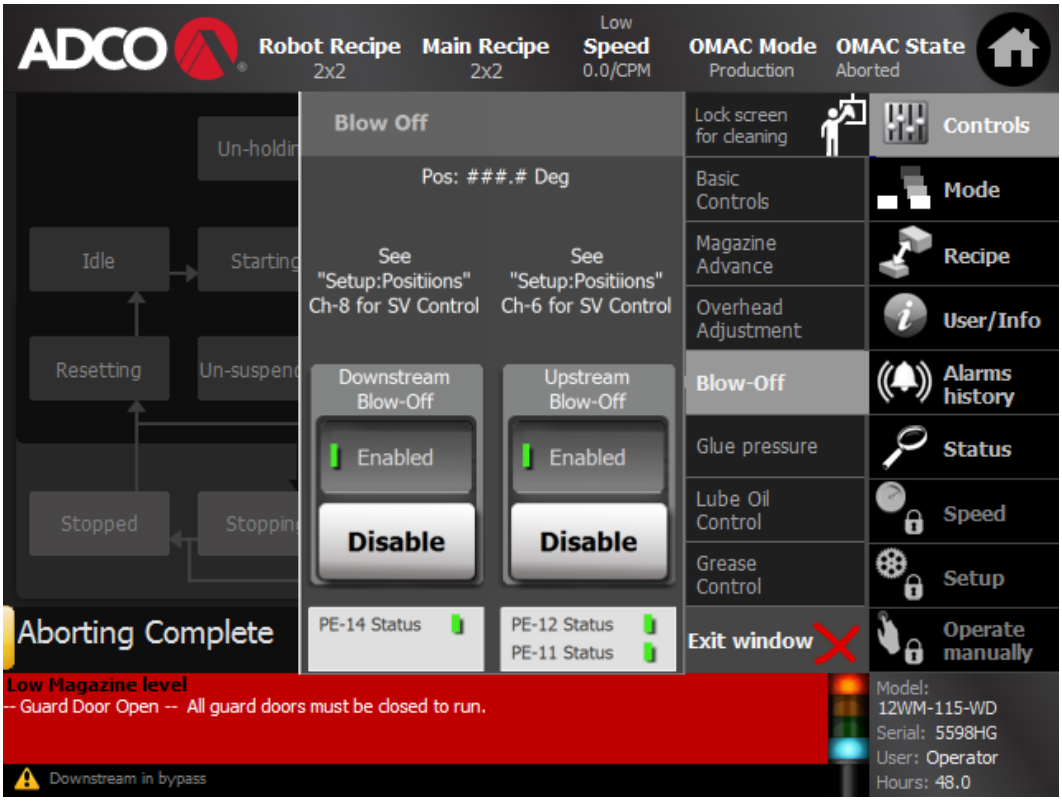

Enabled – Allows the machine to interrogate the infeed conveyor product detect eyes and decide whether or not to eject the product based on count.

Disabled – The air-blow will not activate.

Photo Eye Status – Shows the state of the photo eyes.

Green – The Photo Eye is powered on and sending a signal.

Red – The Photo Eye is not sending a signal.

Glue Pressure

Sets the Pressure Transducer between Automatic and Manual modes, most times the Glue Pressure should be set to Automatic Mode.

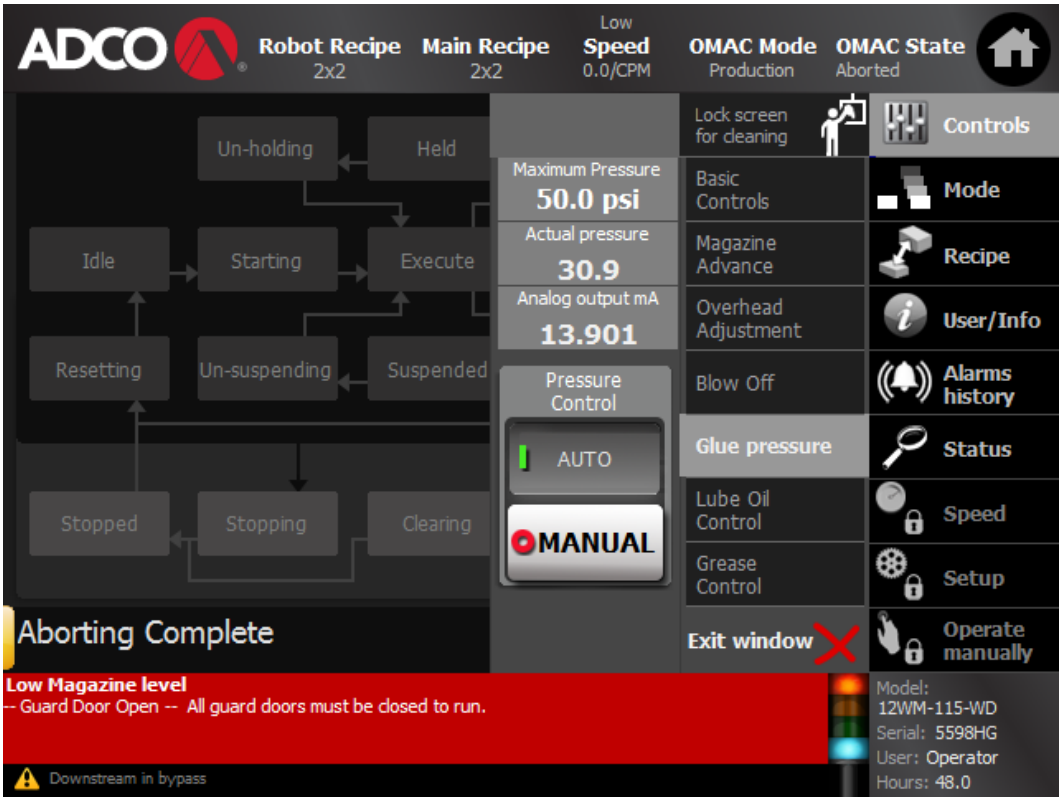

Maximum Pressure – Displays the Maximum Pressure the transducer will set the Glue Pressure to.

Actual Pressure – The current pressure set by the pressure transducer.

Pressure Control – Switches the Glue Pressure Control between automatic and manual modes.

Auto – The machine will set the glue pressure to the amount designated by the machines current speed.

Manual – The glue pressure will hold the set amount regardless of machine speed.

Lube Controls

The Lube Controls Screen allows manual operation of the Oil

Current Interval – The amount of time between oil pump activations.

Manual Oil Operate –Oil Pump manually operates while pressed.

Level Warning – Indicates that the Oil Pump has sufficient oil and the low level indicator is giving a level good signal.

Green – The level is okay / enough oil.

Red – The oil level is too low.

Level Fault – Indicates that the Oil Pump has a fault.

Green – The Photo Eye is powered on and sending a signal.

Red – The Photo Eye is not sending a signal.

Grease Controls

The Grease Controls Screen allows manual operation of the Grease

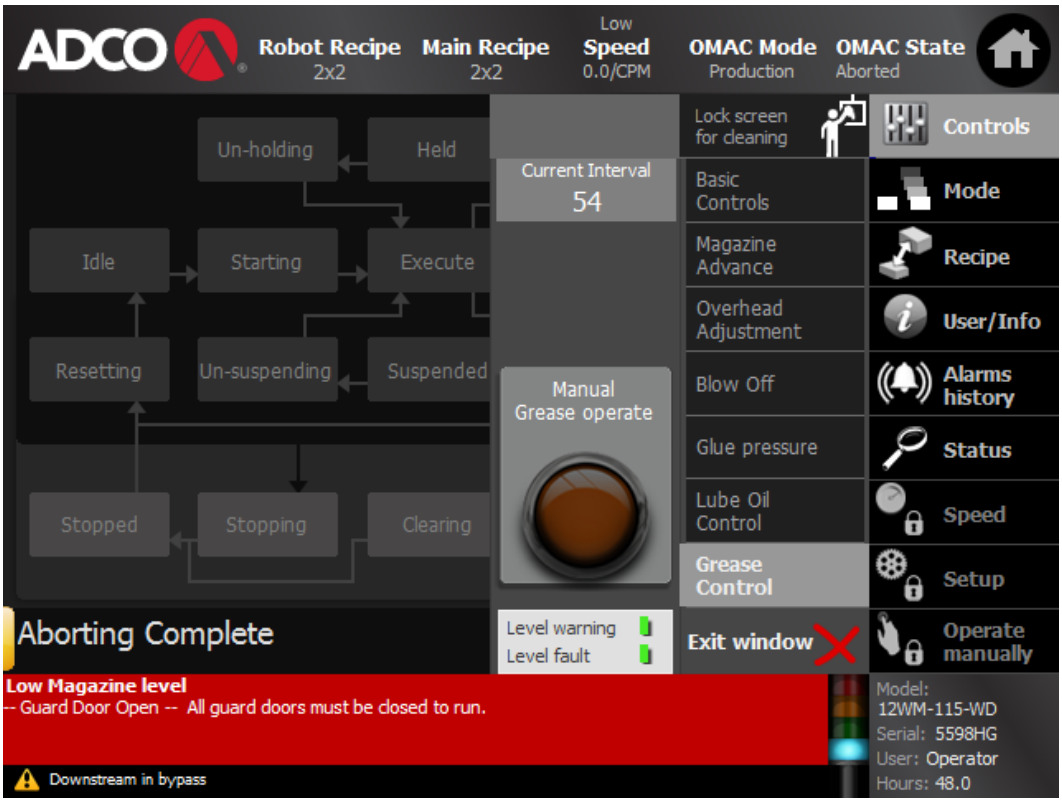

Current Interval – The amount of time between oil pump activations.

Manual Grease Operate - Grease Pump manually operates while pressed.

Level Warning – Indicates that the Oil Pump has sufficient oil and the low level indicator is giving a level good signal.

Green – The level is okay / enough oil.

Red – The oil level is too low.

Level Fault – Indicates that the Oil Pump has a fault.

Green – The Photo Eye is powered on and sending a signal.

Red – The Photo Eye is not sending a signal.

Mode Selection Tab

The Machine Mode Selection Screen allows the user to select between the different modes of operation. All of which have their own options and capabilities. For a description of the Machine Modes, please see Page **Error! Bookmark not defined.**.

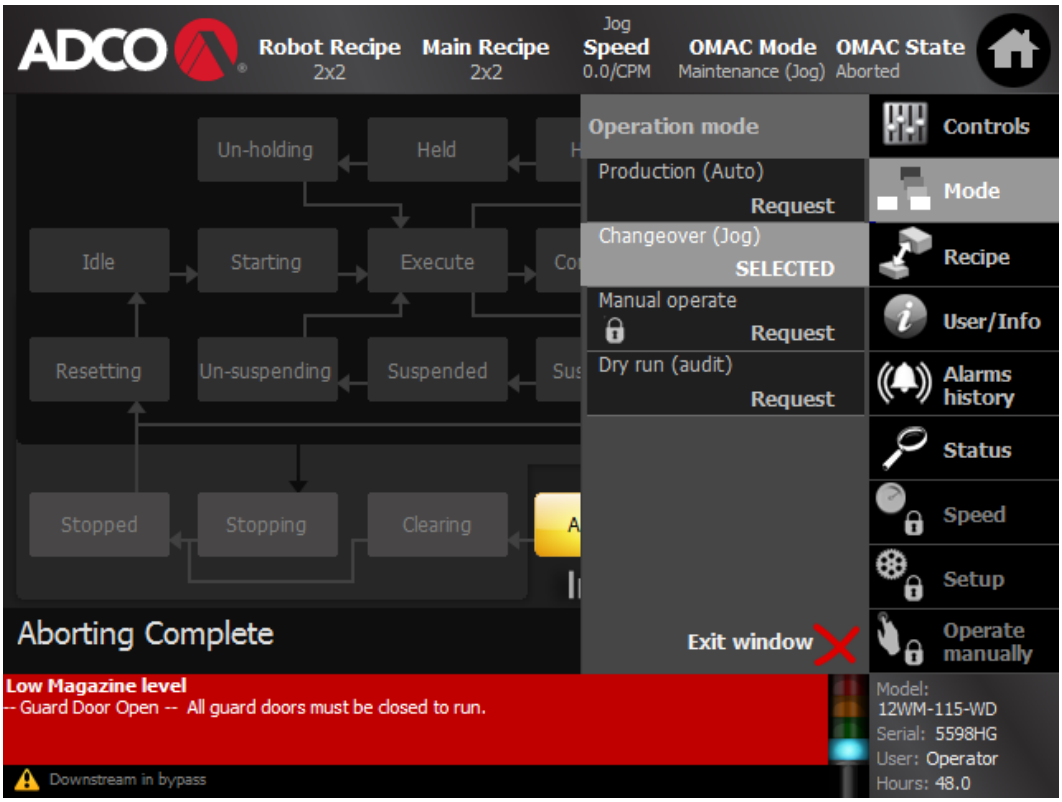

Production Mode – Places the machine into Production Mode.

Changeover Mode – Places the machine into Jog / Changeover Mode.

Manual Mode – Places the machine into Manual Mode.

Dry Run Mode – Places the machine into Dry Run Mode.

Recipe Select Tab

The Recipe Select Screen allows operators to change to different recipes. It also allows the operator to change the recipe and save the changes made. The recipe list can hold up to ten recipes. When a recipe is being run, a different recipe can be edited and saved with changes without affecting the recipe being run. This only happens when selecting a recipe to edit from the recipe selection screen.

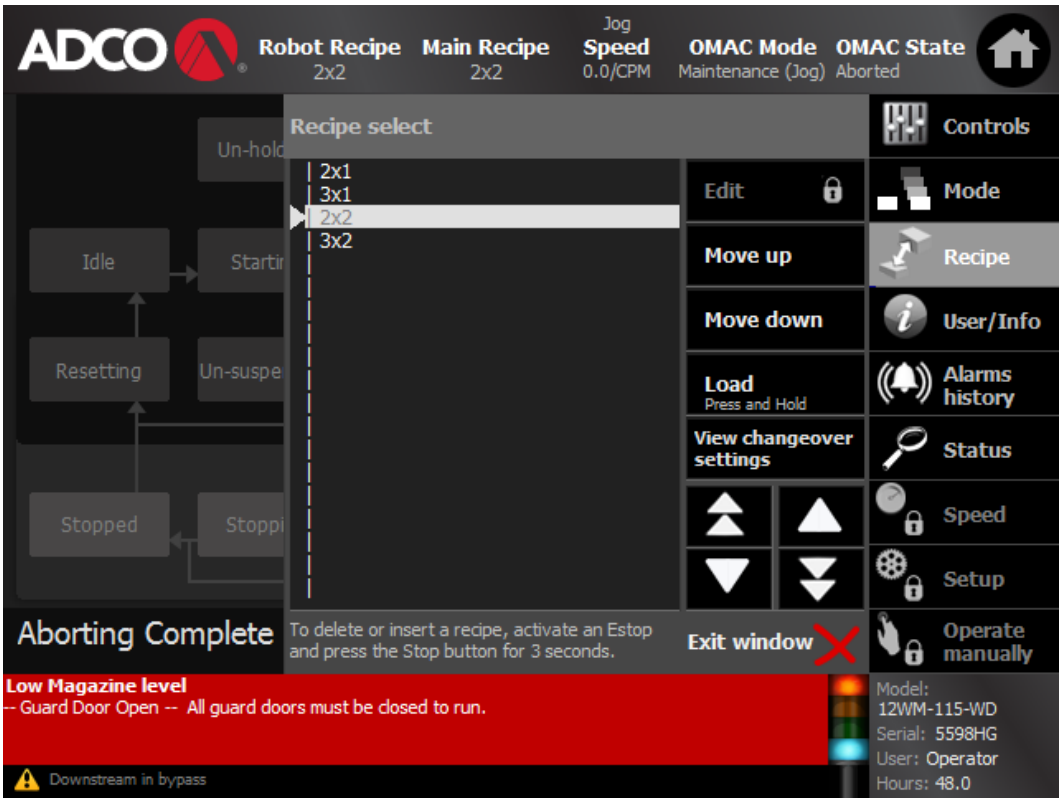

NOTE: This machine allows the recipe to be changed while the machine is running production, but those changes must be saved and then loaded before they take effect.

Up and Down – The Up and Down Buttons move the selection triangle and highlight up and down the recipe list.

Page Up and Page Down – The Page Up and Down Buttons view the next page of viewable recipes on the list.

Top – Goes to the top of the recipe list.

Load Recipe – Makes the highlighted recipe the active recipe and places the recipe name in the Currently Running Display.

Edit – Loads the highlighted recipe into the Edit Display. It also makes the recipe available for editing in the different recipe screens. A warning screen may open if the machine notices a change that was not recorded when editing the loaded recipe.

Delete – Deletes the selected recipe.

Insert – Places a blank recipe slot where the highlight is, moving the other recipes down one slot.

Recipe Changed Warning Pop-Up

The Recipe Changed Warning Pop-Up will appear when the currently running recipe is being edited, but was changed from outside the recipe screens. An example would be the machine speed, it can be modified from the Speed Select Screen, or on the Recipe Edit Screens and then loading it. If the speed was modified on the Speed Select Screen, and the recipe was edited, the machine would notice the change and give the below warning.

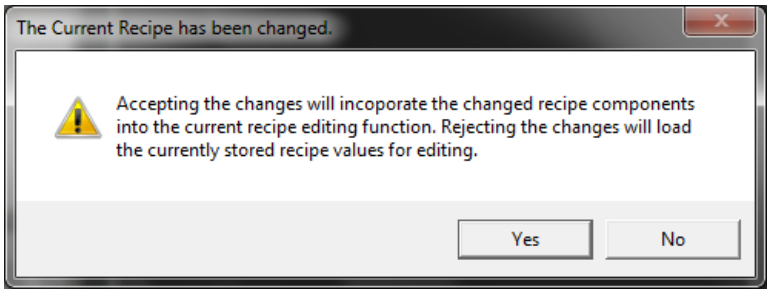

Accept Changes – Accepting changes will not save those changes, it instead opens the Recipe Edit Mode and allows side by side comparison of how the machine is set up now versus what is saved for the current recipe. The user then has the opportunity to save those changes by pressing save, or rejecting by using the cancel button.

Reject Changes – Ignores and changes made while the machine was being run and only edit the saved changes.

Recipe Glue Edit Screens

The Recipe Glue Edit screen allows the technician to edit the glue pattern that is applied to the sleeve. The right hand column, "Current: Stitch #" displays the glue settings for the recipe that is currently loaded (not necessarily the recipe to be edited!).

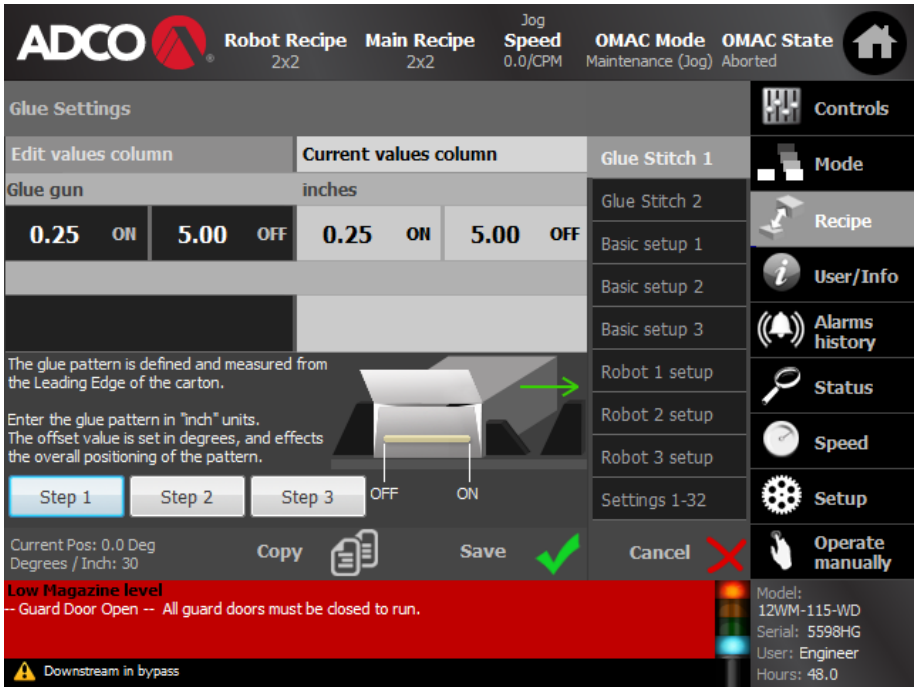

Save – Press to save any changes made in the Editing column.
Cancel – Press to stop the editing operation and cancels any changes made, the editing column will then empty.
Copy – .

Adjusting the Pattern On/Off settings

- Basics: These settings adjust where the glue starts and stops on the sleeve
- Setup:
  1. Using a tape measure, note the positions where the glue is needed.
  2. Adjust the Pattern ON setting so that it matches the start point for the first location.
  3. Adjust the Pattern OFF setting so that it matches the stop point for the first location.
  4. If a second location is needed, press the Glue Stitch Pattern 2 for the next glue bead, Pattern 3…so on.
  5. Press SAVE.
- Test:
  1. Make sure the glue is enabled
  2. Jog a new sleeve/product through the entire machine and pick it up at the discharge end.
  3. Pull open the sleeve to see where the glue started and stopped.
  4. Adjust the ON/OFF values accordingly. Remember:
     a. 6 degrees = 0.2"

b. ON: increasing the value will move the bead start farther away from leading edge of the sleeve
c. OFF: increasing the value will move the bead end closer to the trailing edge of the sleeve
d. Press SAVE and LOAD to test the new settings

Warning: Avoid changing the distance between the glue photo eye and the glue gun!

Recipe Copy Warning Pop-Up

When a recipe is edited and saved in a different location, the Recipe Copy Warning Pop-Up will appear if attempting to overwrite an existing recipe.

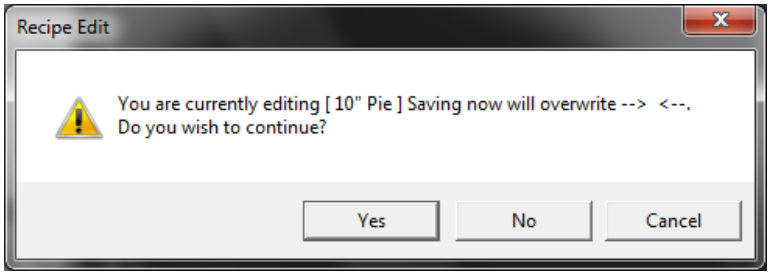

Yes – Continues the copy operation and saves over the target recipe.

No – Stops the copy operation, but will stay in the edit mode.

Cancel – Stops all editing operations and cancels all edits to the recipe.

Recipe Basic Setup 1

The Recipe Setting Screen holds the recipe parameters for the recipe not affecting the glue pattern. It sets the speeds for each particular recipe for the two speed shift eyes, and keeps track of the product count for particular machine processes. It also designates the product indexer start point for each recipe.

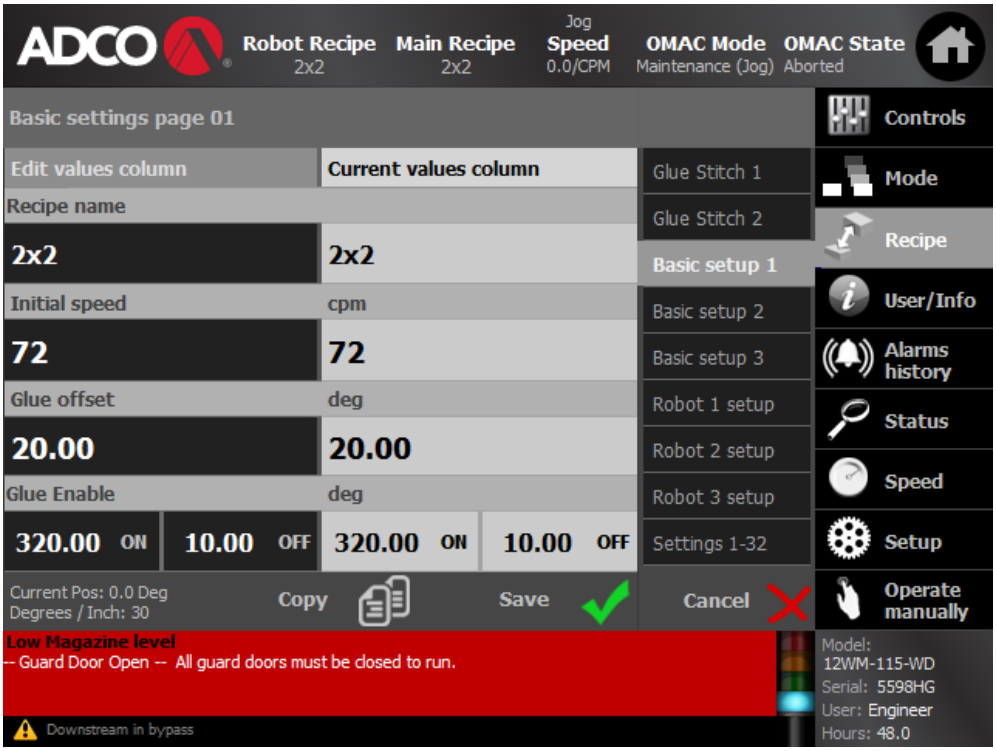

Save – Press to save any changes made in the Editing column.

Cancel – Press to stop the editing operation and cancels any changes made, the editing column will then empty.

Copy – .

Edit Values Column: Editing Column

Current Column: Displays what the current values are for what the machine is currently running.

Recipe Name – Displays and selects when pressed, the name for the recipe being edited.

Initial Speed – Displays and selects when pressed, the speed the machine will be set to when the recipe is first loaded.

Glue Offset – Displays and selects when pressed, the distance from the glue eye to the glue gun.

Adjusting the Enable Window

- Basics: This is the timing window where the glue photo eye looks for the leading edge of the sleeve.
  Note: The photo eye is an "enable" not a "trigger". Once the eye senses the sleeve, it will NOT start firing glue. Instead it will delay a pre-programmed amount before firing the glue gun
- Setup:
  1. Jog the machine until the leading edge of the sleeve /carton is in line with the center of the photo eye (lights should just come on)
  2. View the current position from the relevant position for the main flights
  3. Note the Position value (example = 75 degrees)
  4. Navigate back to the Recipe Glue Edit Tab.
  5. Adjust Enable Window ON setting so that it is 20 degrees LESS than the HMI position shown (75 – 20 = 55 degrees)
  6. Adjust Enable Window OFF setting so that it is 20 degrees MORE than the HMI position shown (75 + 20 = 95 degrees)
  7. Press SAVE.
- Test: Jog a new sleeve / carton past the eye and make sure the eye senses the sleeve (green light turns on). If the green light does not turn on, it may need to be moved slightly (up/down/rotated) until it detects the sleeve.

Recipe Basic Setup 2

The Recipe Setting Screen holds the recipe parameters for the recipe not affecting the glue pattern. It sets the speeds for each particular recipe for the two speed shift eyes, and keeps track of the product count for particular machine processes. It also designates the product indexer start point for each recipe.

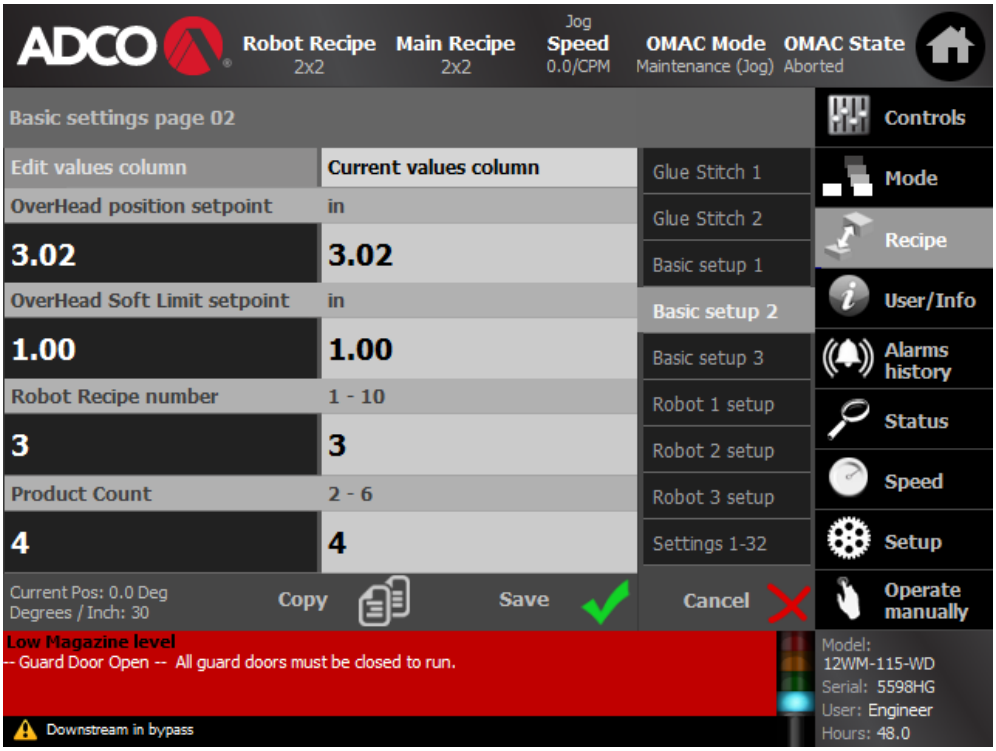

Save – Press to save any changes made in the Editing column.

Cancel – Press to stop the editing operation and cancels any changes made, the editing column will then empty.

Copy – .

Edit Values Column: Editing Column

Current Column: Displays what the current values are for what the machine is currently running.

Overhead Position Set Point – Displays and selects when pressed, the height for the overhead conveyor for set product.

Overhead Soft Limit Set Point – Displays and selects when pressed, the lowest point the overhead conveyor will lower to. Used to prevent the overhead conveyor from crushing the product.

Robot Recipe Number – Displays and selects when pressed, the Robot recipe to be selected when the recipe is loaded.

Product Count – Displays and selects when pressed, the amount of product to allow the air blow off photo eyes to properly count the product to assure the indexer placed the correct amount product.

Recipe Basic Setup 3

The Recipe Setup Screen holds the recipe parameters for the recipe not affecting the glue pattern. It sets the speeds for each particular recipe for the two speed shift eyes, and keeps track of the product count for particular machine processes. It also designates the product indexer start point for each recipe.

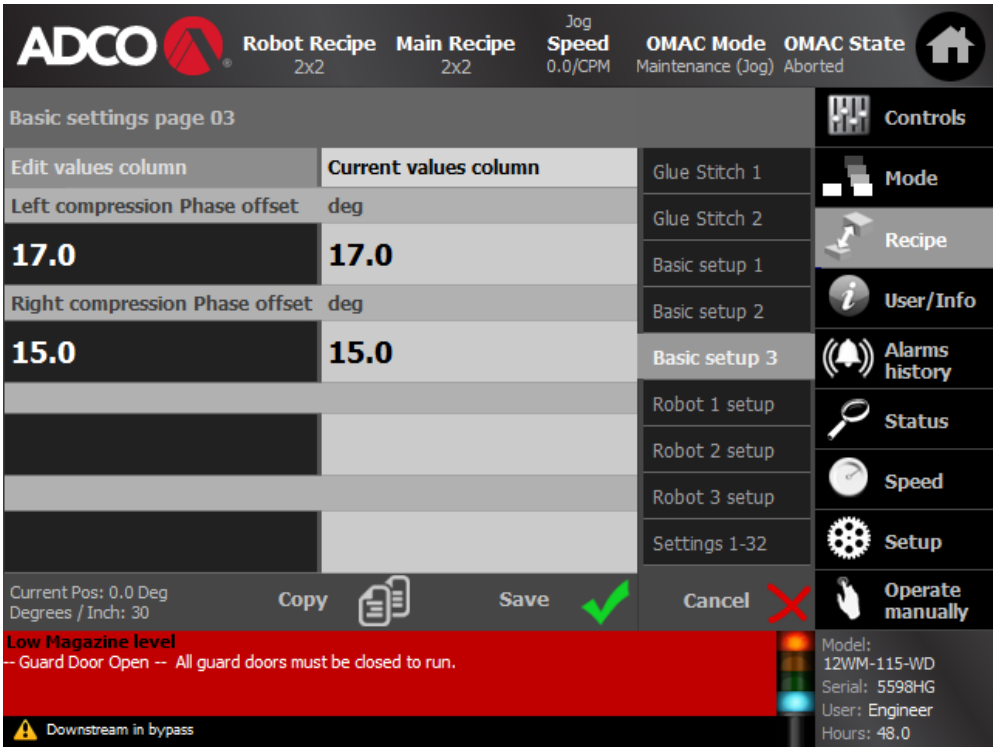

Save – Press to save any changes made in the Editing column.

Cancel – Press to stop the editing operation and cancels any changes made, the editing column will then empty.

Copy – .

Edit Values Column: Editing Column

Current Column: Displays what the current values are for what the machine is currently running.

Left Compression Offset – Displays and selects when pressed, the offset used to time the left compression chain.

Right Compression Offset – Displays and selects when pressed, the offset used to time the right compression chain.

Recipe Robot Screen

The Recipe Robot Screen holds the recipe parameters for adjusting the Robot Offsets, pick and place, and the approach locations.

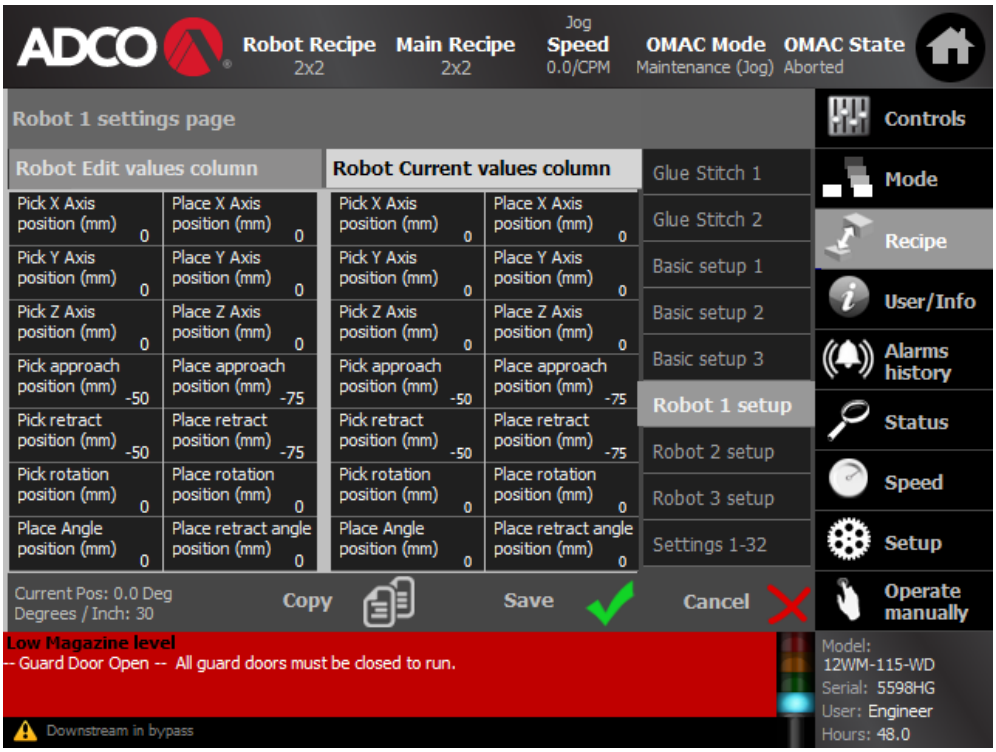

Save – Press to save any changes made in the Editing column.

Cancel – Press to stop the editing operation and cancels any changes made, the editing column will then empty.

Copy – .

Edit Values Column: Editing Column

Current Column: Displays what the current values are for what the machine is currently running.

Pick X Axis Position Offset – Displays and selects when pressed, the amount the End-of-Arm-Tooling (Vacuum Cups) will be moved along the X-Axis, or perpendicular to product flow. A positive value will move the tooling toward the right side, toward the infeed side, of the machine. A negative value will move it in the opposite direction.

Pick Y Axis Position Offset – Displays and selects when pressed, the amount the End-of-Arm-Tooling (Vacuum Cups) will be moved along the Y-Axis, or with product flow. A positive value will move the tooling downstream, away from the main machine. A negative value will move it in the downstream direction.

Pick Z Axis Position Offset – Displays and selects when pressed, the amount the End-of-Arm-Tooling (Vacuum Cups) will be moved along the Z-Axis, or vertically. A negative value will move the tooling up, away from the conveyor. A positive value will move it down, toward the conveyor.

Pick Approach Position – Displays and selects when pressed, the position the robot will move to when waiting to pick product from the bottom pin conveyor.

Pick Retract Position – Displays and selects when pressed, the position the robot will move to after picking the set of product, before picking the next set of product.

Pick Rotation Position – Displays and selects when pressed, the position the robot has to be above the bottom pin conveyor before rotating to pick product. This is to be used more for the 1x3 and 2x3 product configurations, since the tooling needs to be rotated for operation.

Place Angle Position – Displays and selects when pressed, the position above the main product conveyor the robot tooling will travel to, before descending, and then placing the first layer of product.

Place X Axis Position Offset – Displays and selects when pressed, the amount the End-of-Arm-Tooling (Vacuum Cups) will be moved along the X-Axis, or perpendicular to product flow. A positive value will move the tooling toward the right side, toward the infeed side, of the machine. A negative value will move it in the opposite direction.

Place Y Axis Position Offset – Displays and selects when pressed, the amount the End-of-Arm-Tooling (Vacuum Cups) will be moved along the Y-Axis, or with product flow. A positive value will move the tooling downstream, away from the main machine. A negative value will move it in the downstream direction.

Place Z Axis Position Offset – Displays and selects when pressed, the amount the End-of-Arm-Tooling (Vacuum Cups) will be moved along the Z-Axis, or vertically. A negative value will move the tooling up, away from the conveyor. A positive value will move it down, toward the conveyor.

Place Approach Position – Displays and selects when pressed, the position the robot will move to when waiting to place product onto the main product conveyor.

Place Retract Position – Displays and selects when pressed, the position the robot will move to after placing the first layer product, before placing the next layer of product.

Place Rotation Position – Displays and selects when pressed, the position the robot has to be above the main product conveyor before rotating to place product. This is to be used more for the 1x3 and 2x3 product configurations, since the tooling needs to be rotated for operation.

Place Retract Angle Position – Displays and selects when pressed, the position above the main product conveyor the robot tooling will travel to before returning to the pick approach position.

Robot X, Y and Z Axis Direction Graphical Display

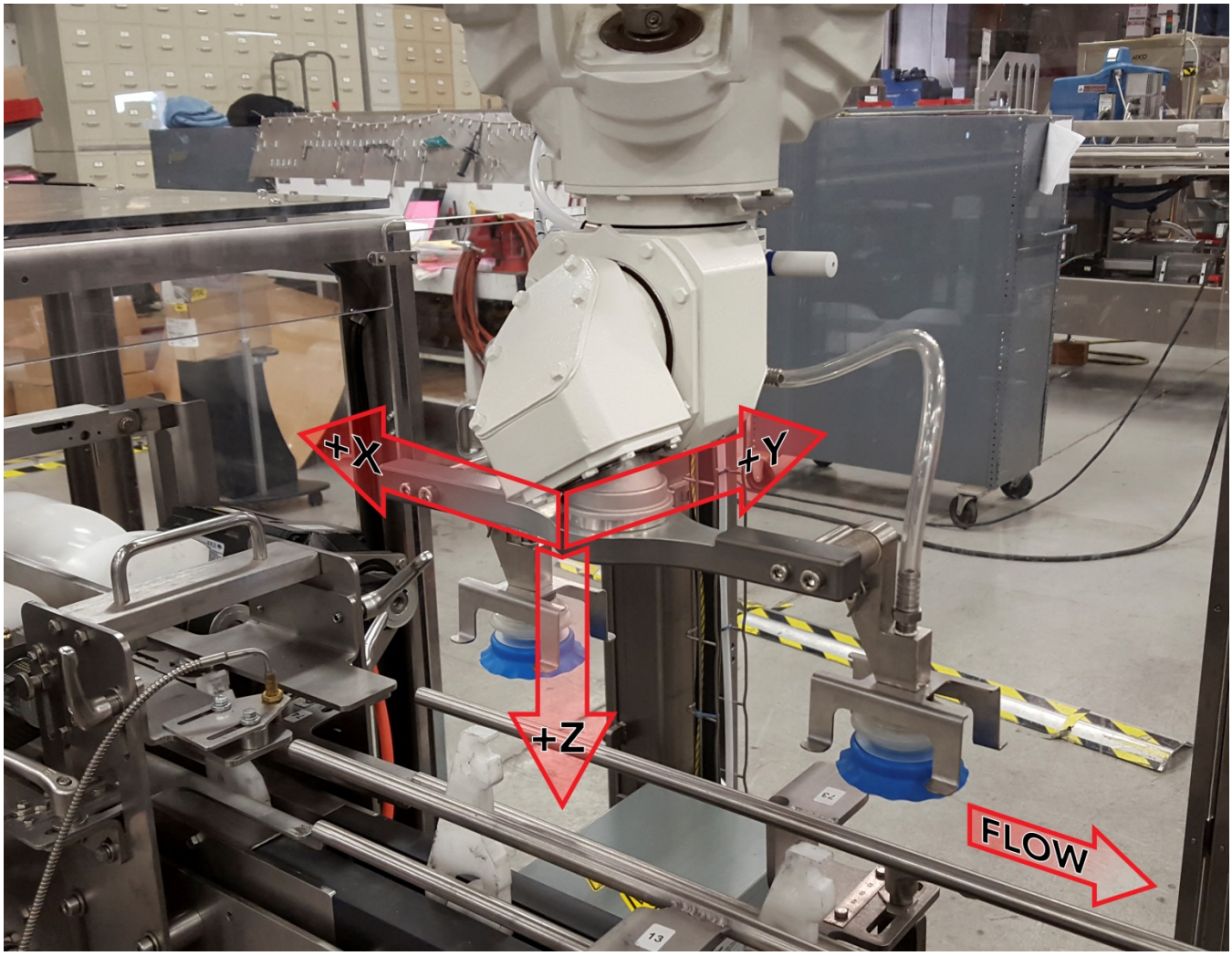

Recipe Manipulation Procedures

From most any screen, selecting the “Recipe” button (on the right side, toward the top) brings you to this screen:

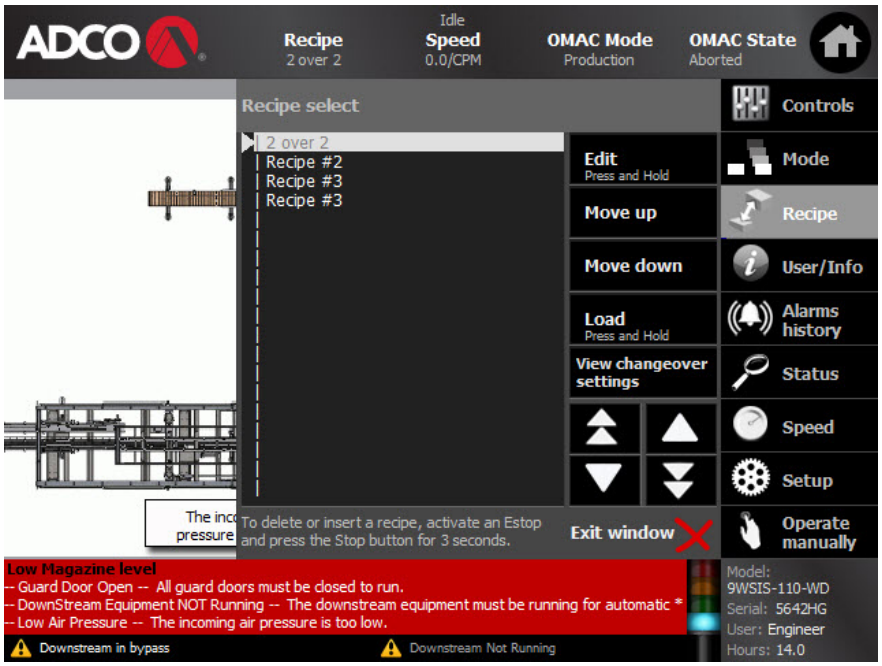

The buttons shown are the only actions you can take in this state. The “Load” button will move the recipe data from the selected recipe to the machine for use. This button must be held for a few seconds (until the green bar turns entirely yellow) to actually move the data.

Each recipe can be moved up or down in the list using the “Move up” and “Move down” buttons. These will not affect the currently running recipe. You can use these buttons to arrange the list to best fit your application.

Editing a recipe

Press and hold the “Edit” button until the green bar is yellow (about 2 seconds). You will be presented with this screen:

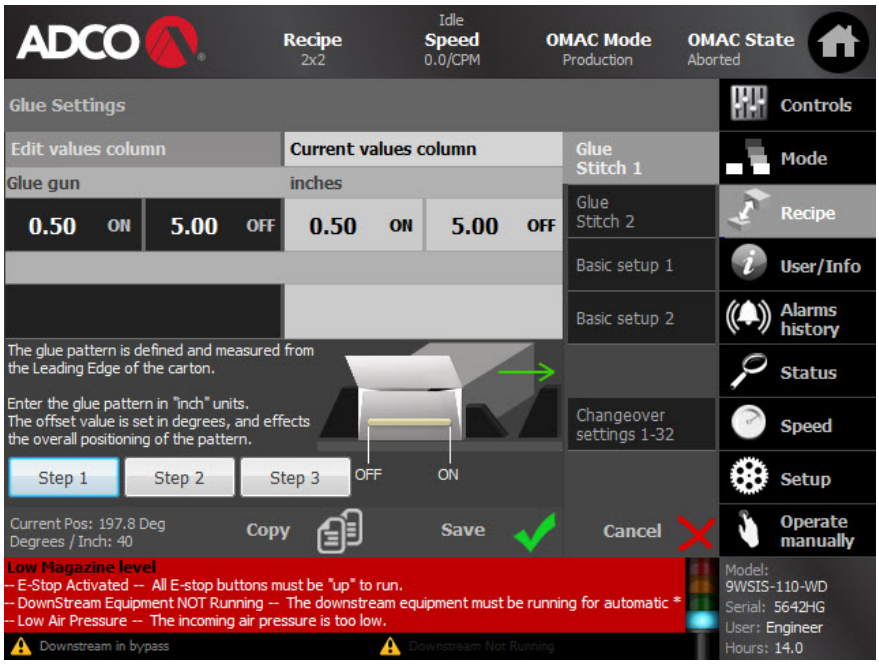

From here you can make changes to the various recipe components, using the left column(s). The right column(s) will indicate what the machine is currently using, whether it is this recipe or another recipe. When you are finished making the necessary changes, press the “Save” symbol (by the green checkmark). Or, if you decide not to make any changes, press “Cancel” (the red X).

Copying a recipe

You can also copy this recipe to save it as a basis for a new, similar recipe, or for backup. While editing the recipe you wish to copy (see above), press the "Copy" symbol (two "pages"). The edit will be canceled and you will be presented with this screen:

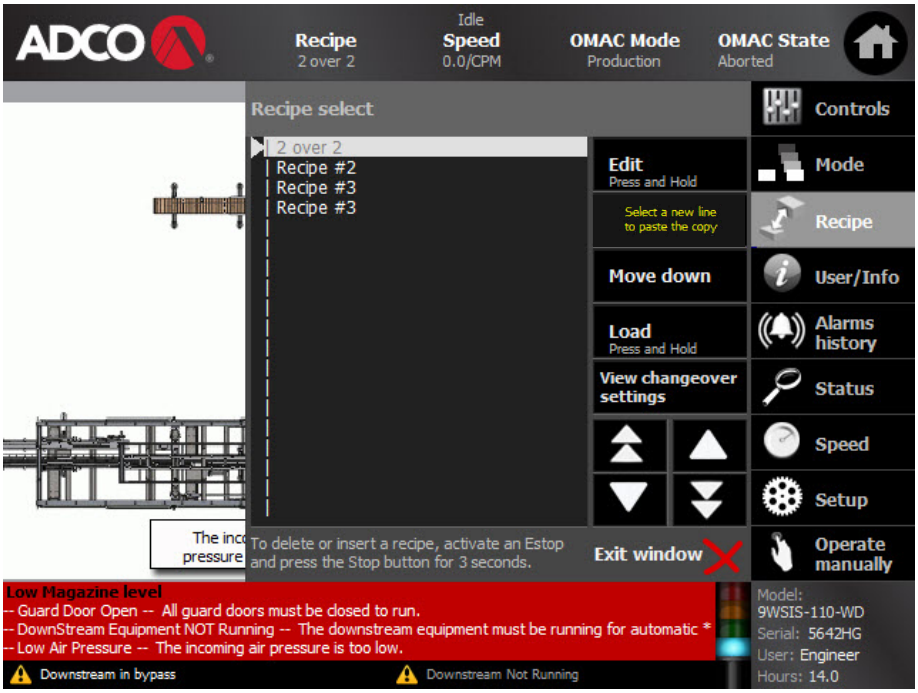

Then, using the arrow keys, bring the cursor to the recipe line you want to make the copy into (paste).

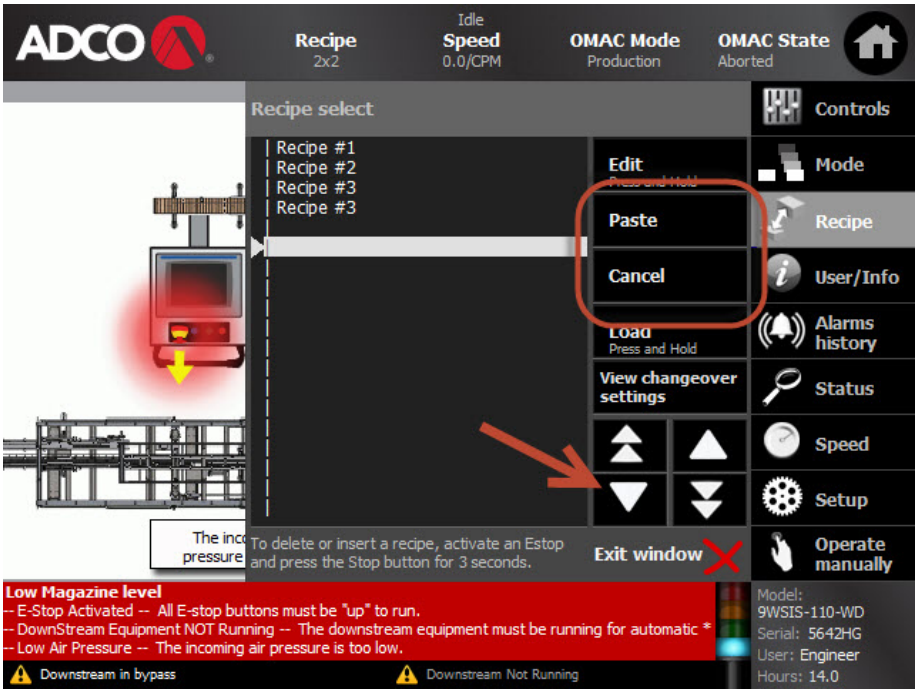

Then press the "Paste" button. You will get a confirmation dialog box, as shown below. In this example, we are copying to a blank line, so the "overwrite" name is just empty quote marks, but if you were to copy over an existing recipe, its name would show up here.

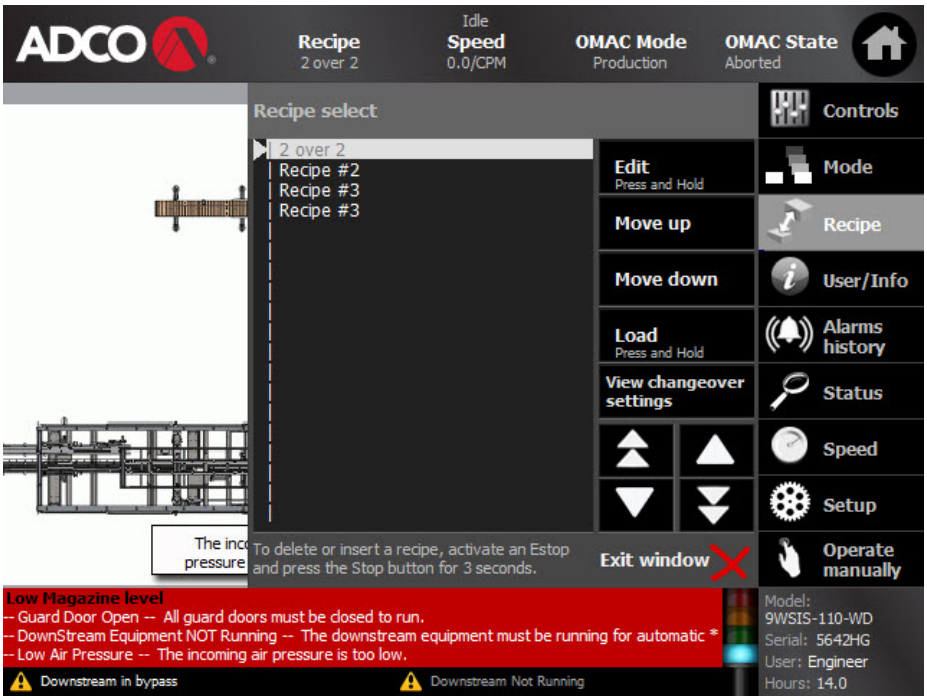

Press the appropriate Yes, No, or Cancel button to finish the copy/paste operation. You can then edit the newly copied recipe or simply have it stored as a backup.

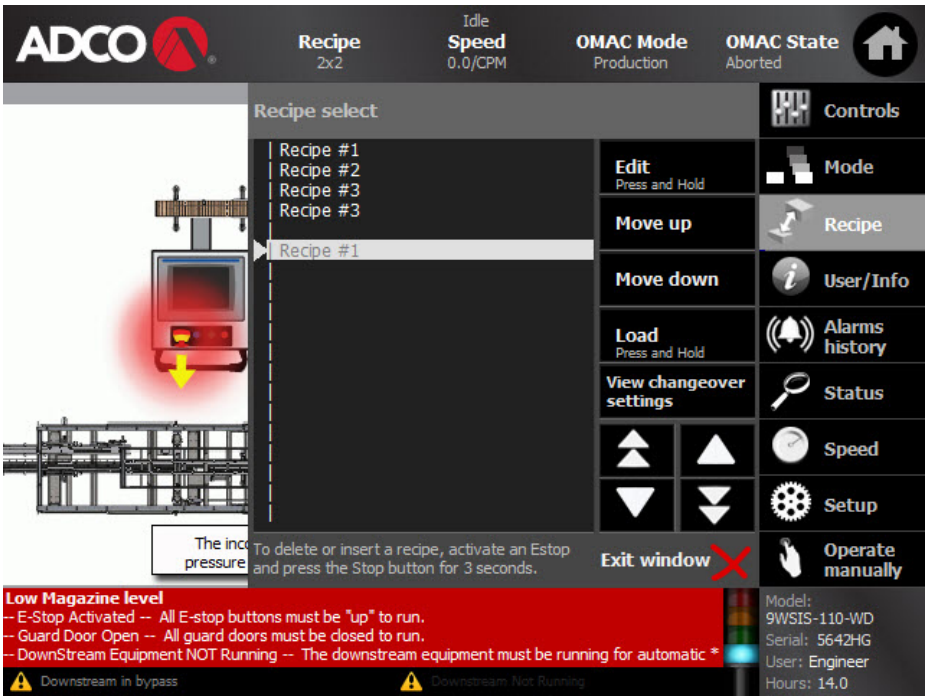

Deleting and inserting

It is possible to insert a new recipe or delete a current recipe, but you must first press an e-stop button. Then, while on the main recipe select screen, use the arrow keys to select the recipe to be deleted or inserted above. Press and hold the "hard wire" stop button (the red one, but not the e-stop) for at least 5 seconds. The screen will change to look like this:

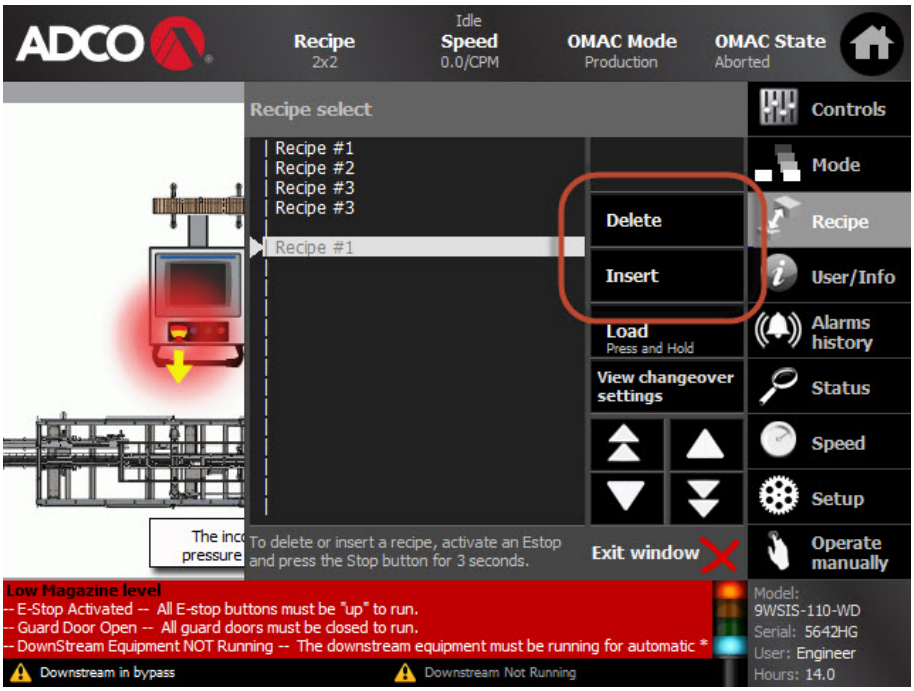

Continue to hold the stop button and press the desired action button. The "Delete" button will offer a "are you sure" dialog box. "Insert" will immediately insert an empty recipe above the current cursor position. If there is a recipe in the bottom (last) position, inserting anything above will push it "off the edge" and it will be lost. Releasing the stop button will restore the screen to its normal state.

User / Info Tab

The User / Info Tab opens the tab to access most of user specific settings and information about the machine.

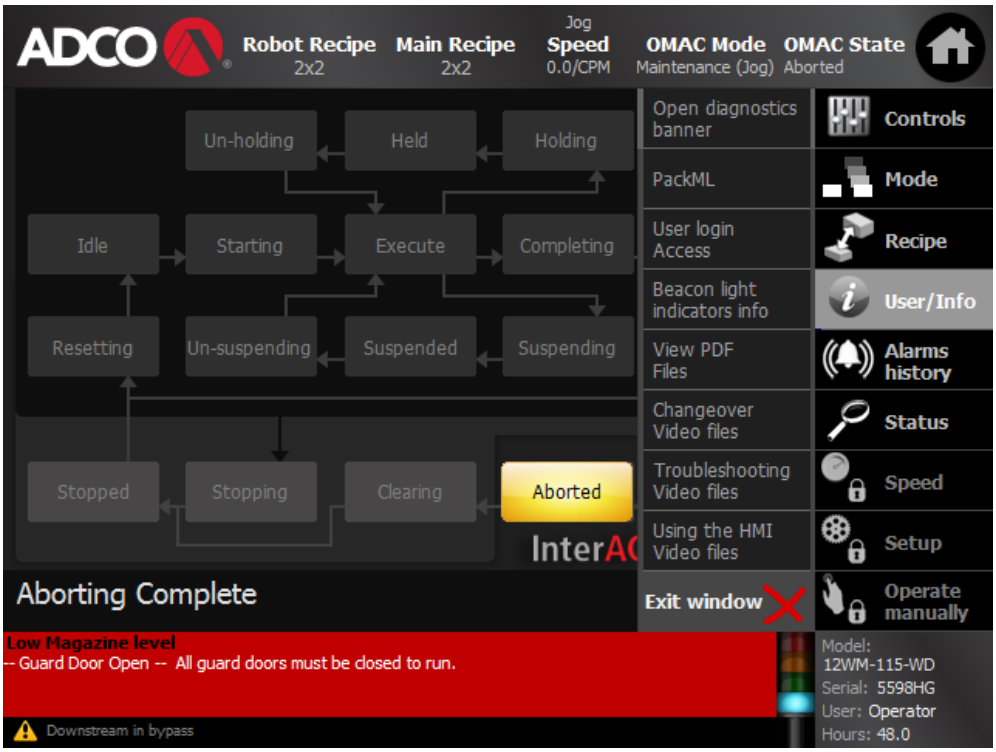

Diagnostics Banner

The PackML Status Map Screen shows the operator what status the machine is in and what path it can take from there. It is used for troubleshooting and accounting purposes.

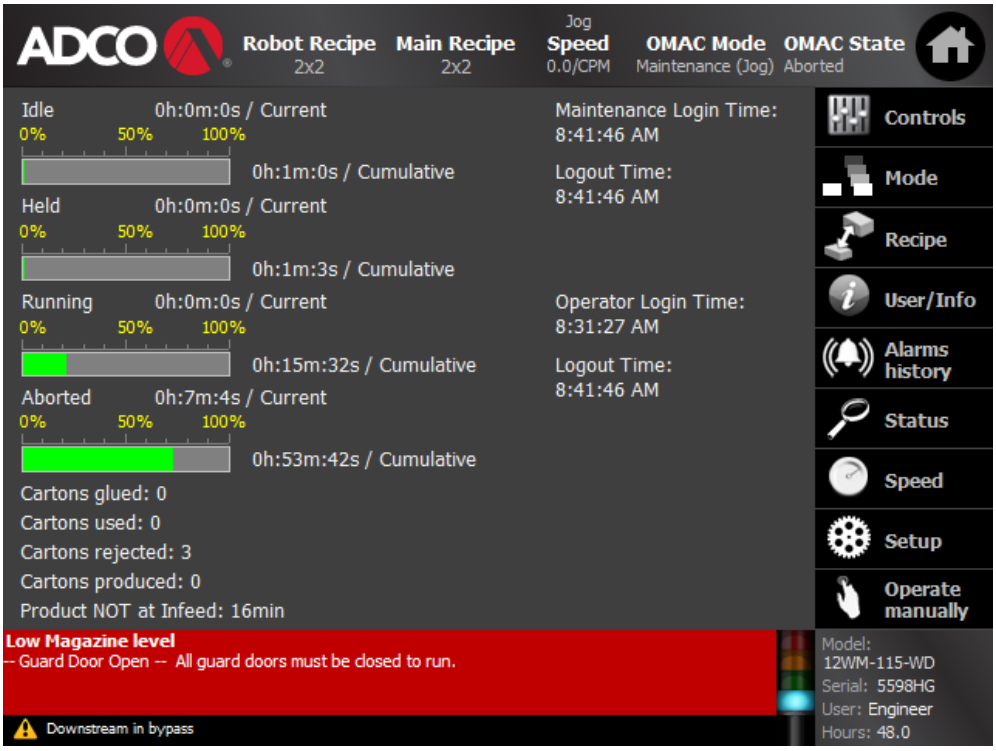

PackML Status Map – This goes to the PackML Status Map Window.

PackML Status History – This will go to the PackML Status History Window.

Close – Close the current window.

The following are the definitions of the various PackML states.

Stopped – Indicates the machine is at a hard stop.

Resetting - Indicates the machine is initializing the servos, and preparing the machine to run.

Idle - Indicates that the machine has fully reset and no alarms are active. The machine can now be started.

Starting - Indicates that the servos are homing to their zero positions and will soon start running.

Executing - Indicates that the machine is running production.

Holding - Indicates that the stop button has been pressed, or the downstream backup eye has been blocked.

Held- Indicates that those statuses that cause the machine to be put in hold are active and the machine has stopped.

Un-holding - Indicates that statuses have been cleared and the Start / Reset Button have been pressed.

Suspending - Means the machine stopped due to low material, such as a low hopper or glue, or some upstream fault stopped the machine.

Suspended - Indicates that the machine has stopped from a fault or similar conditions.

Un-Suspending - Indicates that the suspended state is clear and the Start / Reset Button has been pressed.

Completing - This machine does not use the completing state.

Completed - This machine does not use the completed state.

Aborting - Indicates that a safety device has been triggered, an emergency stop has been pressed, or other machine fault has occurred.

Aborted - Indicates that the machine has come to a full and complete stop.

Clearing - Indicates that the Reset Button has been pressed and the machine is returning to the stopped state.

PackML Tab

The PackML Status Map Screen shows the operator what status the machine is in and what path it can take from there. It is used for troubleshooting and accounting purposes.

PackML Status Map – This goes to the PackML Status Map Window.

PackML Status History – This will go to the PackML Status History Window.

Close – Close the current window.

The following are the definitions of the various PackML states.

Stopped – Indicates the machine is at a hard stop.

Resetting - Indicates the machine is initializing the servos, and preparing the machine to run.

Idle - Indicates that the machine has fully reset and no alarms are active. The machine can now be started.

Starting - Indicates that the servos are homing to their zero positions and will soon start running.

Executing - Indicates that the machine is running production.

Holding - Indicates that the stop button has been pressed, or the downstream backup eye has been blocked.

Held- Indicates that those statuses that cause the machine to be put in hold are active and the machine has stopped.

Un-holding - Indicates that statuses have been cleared and the Start / Reset Button have been pressed.

Suspending - Means the machine stopped due to low material, such as a low hopper or glue, or some upstream fault stopped the machine.

Suspended - Indicates that the machine has stopped from a fault or similar conditions.

Un-Suspending - Indicates that the suspended state is clear and the Start / Reset Button has been pressed.

Completing - This machine does not use the completing state.

Completed - This machine does not use the completed state.

Aborting - Indicates that a safety device has been triggered, an emergency stop has been pressed, or other machine fault has occurred.

Aborted - Indicates that the machine has come to a full and complete stop.

Clearing - Indicates that the Reset Button has been pressed and the machine is returning to the stopped state.

Login Tab

The Password Screen allows users to login with their password. Some screens are inaccessible without login, access to some screens are also regulated by the users privileges. The login tab shows the names / levels that users can login as.

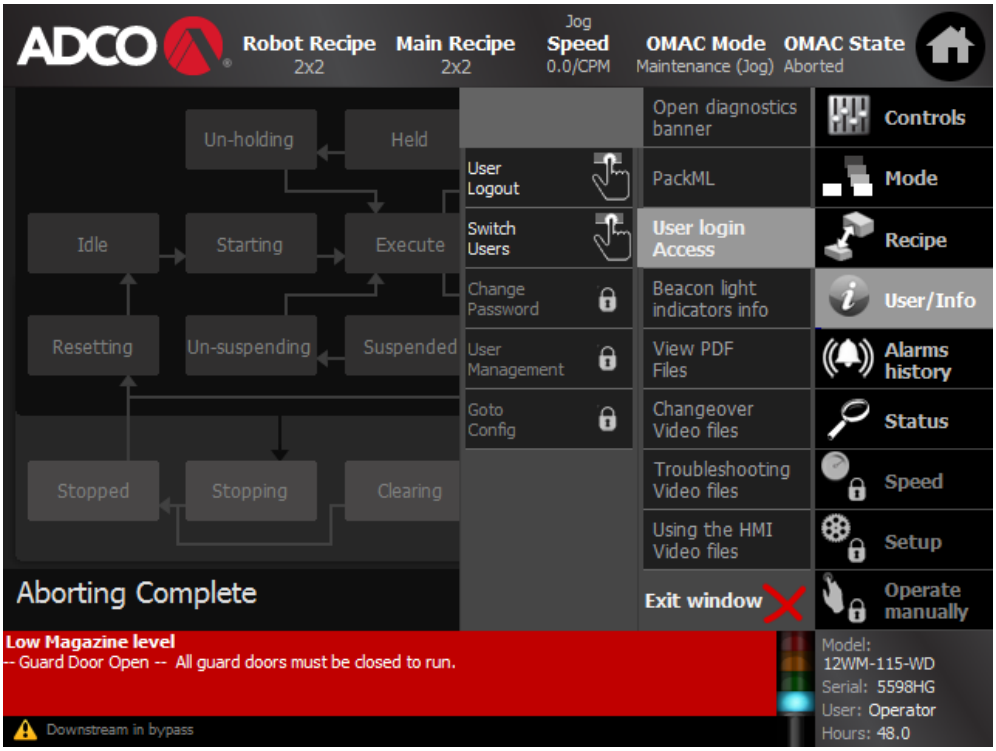

Close – Pressing the close button will closet the login screen and remain logged in as displayed in the Login Display.

Change Password – Allows users to change their password while logged in. The user will place their new password on an alpha-numeric keyboard on the screen.

Login – Allows users to enter their user names and passwords. The user name and password are entered on an alpha-numeric keyboard on the screen.

Log Out – Allows the user who is logged in to be logged out, and restores the machine to default privileges.

Alarm History Tab

When the machine encounters an alarm condition or a fault, it shows up on the HMI Main Control Screen in the Alarm Pop-Up Banner. When the Alarm Pop-Up Banner is closed without the condition being cleared, the condition is listed on the Red Alarm Banner on the Main Control Screen.

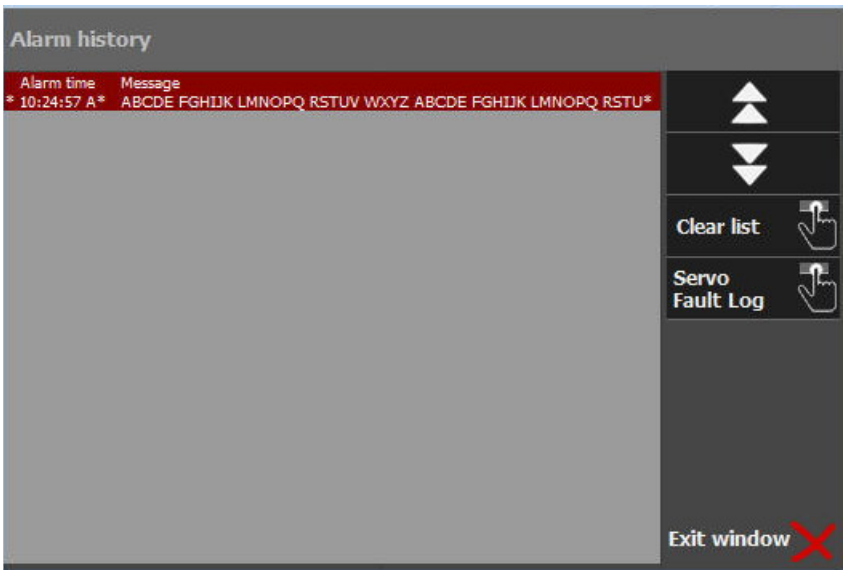

Clear – Allows the operator to clear the currently viewed alarm on the banner.

Close – Closes the Alarm Pop-Up Alarm.

The following is a table of the faults and conditions displayed and their solutions:

Alarm / Condition	Procedure for Clearing
--E-Stop Activated-- All E-Stop buttons must be up to run	Check the Main Control Screen pictorial display to help locate illuminated E-stops and then lift them.
--Guard Door Open-- All guard doors must be closed to run	Check the Main Control Screen pictorial display to help locate open guard doors make sure the interlocks are engaged.
--Servo Fault-- One or more servo faults detected	The most common cause of a servo problem is the servo. To clear the fault, press the Reset Button. Make sure the drive components return to their zero position. NOTE: either the servo itself or a general machine fault.

Alarm / Condition	Procedure for Clearing
	If the servo drive fault condition persists, navigate to the servo fault screen. Here, all of the faults are displayed and can be gone through. Further details will be in the servo drive's manual. Consult the PDF literature supplied with the PDF manual CD.
--Low Hopper Shutdown-- Load the hopper	1. Check the Main Control Screen to check which hopper is low. 2. Refill the hopper(s) to above the corresponding Low Hopper Photo Eyes. 3. Restart the machine to resume Production.
--Low Air Pressure-- The incoming air pressure is too low.	1. Check the plant air supply. 2. Check the filter / regulator for proper setting and a clean filter. 3. Check for kinks in the air line supplying the pressure switch. 4. Follow the restart procedure.
--Cam Track Overload-- The barrel cam cam track is overloaded (PX-12). Clear jam and press reset. Check "hold in" pressure.	A jam has overloaded the jam rail and it needs to be reset.
--OH Cam Track is overloaded (PX-11). Clear jam and press reset. Check the "hold in" pressure.	A jam has overloaded the overhead confiner and it needs to be reset.
--Vacuum Pump OL-- The vacuum pump (M-1) has overloaded. Check filters	1. Check for obstructions in the cooling of the vacuum pump, that the filters are clear, etc. 2. Reset the electromechanical overload relay inside the machine electrical enclosure. 3. Follow the restart procedure.
--Downstream Not Ready-- Current downstream conditions do not permit operation at this time. Check downstream conveyor / Backup photo eye.	1. Clear the Downstream Area Full Photo Eye. 2. Inspect the downstream conveyor and equipment for faults or hang-ups. 3. The machine will continue operation once the downstream condition has been cleared.
--Glue Not Ready-- Check glue melter for power and proper operation.	1. Make sure the glue melter is turned ON and the green ready light is on. 2. Wait the glue melter to come up to temperature. 3. Follow the restart procedure.
--Glue Eye Jam-- The glue enable eye (PE-5) has been blocked too long.	A blank has become jammed in the area of the glue enable photo eye. 1. Check around the glue guns for a jammed sleeve or other blockage. 2. Follow the restart procedure.
--Low Glue Warning-- Glue melter level low, refill. Press reset to silence.	The glue melter is low on glue, refill. 1. Follow the restart procedure.
--Miss Pick Fault-- Too many cartons not picked.	For whatever reason (vacuum problem, low hopper, etc.) the blank was not picked correctly. 1. Inspect the hopper and vacuum cups for torn cups and

Alarm / Condition	Procedure for Clearing
	blockages 2. Follow the restart procedure.
--Overhead out of position—The squaring lug drive section is not the correct position to run. Lower the device.	
--ESR Fault—ESR is not reset properly. Check guard and e-stop.	The ESR has detected one channel closing before the other. 1. Reclose the guard door recently opened. 2. Press and lift and E-Stop.
--ESR Reset Relay Fault—The EIR relay input status doesn't match the output status	1. Follow the restart procedure.
--CPU Math Overload--	Internal PLC fault. 1. Follow the restart procedure.
--Battery Low Level--	Internal PLC battery is low. 1. Order a replacement battery. 2. Power down the Machine. 3. Replace the battery.

Status Tab

The Machine Mode Status Screen allows a quick glance of any issues that need to be resolved before the machine can be started. Each machine status has an indicator to determine what action is needed to get the machine started.

Discrete I/O Input Module – Selects input modules on the PLC for viewing status.

Discrete I/O Output Module – Selects output modules on the PLC for viewing status.

Kinetix 6000 Servo Axis – Selects Servo Axis for viewing status.

PowerFlex 525 Drives – Selects VFD Drives for view status.

Machine Faults – Goes to the Machine Faults Tab.

Discrete I/O Input Status Tab

The Input Slot Status Screen list all the slots for the selected input card. If the status is listed as grey, there is no signal being supplied to the slot. If the status is green, the slot has a signal being supplied to it, red means there is a communication error to the card. To find out what supplies a signal to what slot, check the electrical schematic in Chapter 7 of this manual or open the Info Tab

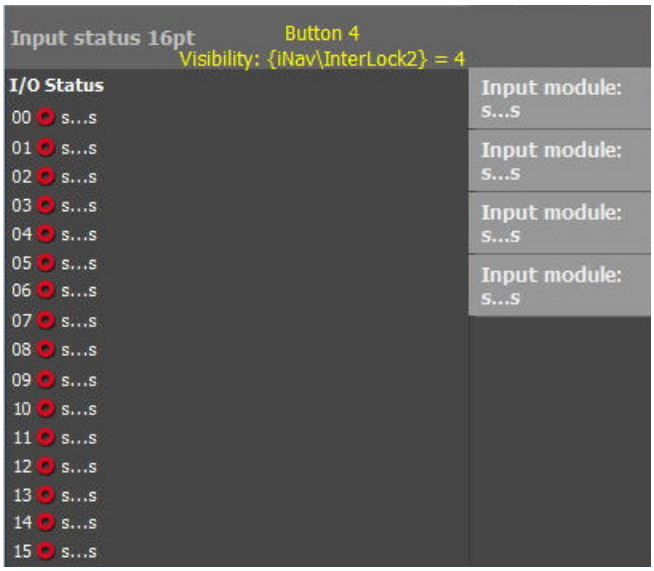

Discrete Output Status Display

The Output Slot Status Screen lists all the slots for the output card. If the status is listed as grey, there is no signal being supplied to the slot. If the status is green, the slot has a signal being supplied to it. To find out what slot supplies a signal to which device, check the electrical schematic in Chapter 7 of this manual.

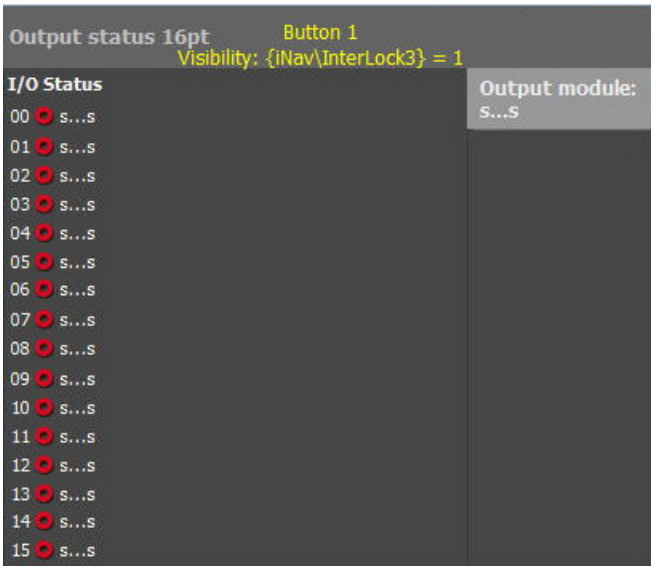

Displayed Device – This will go back to Device Status Selection Screen.

Servo Axis Status Screen

The Axis Status Screen shows statuses for the servo axis. It allows the operator to check the status of the selected servo for troubleshooting purposes. For more details on the statuses of the servo drive, please see the electronic copy of the Kinetix 6000 Servo Drive Manual on the PDF Manual CD.

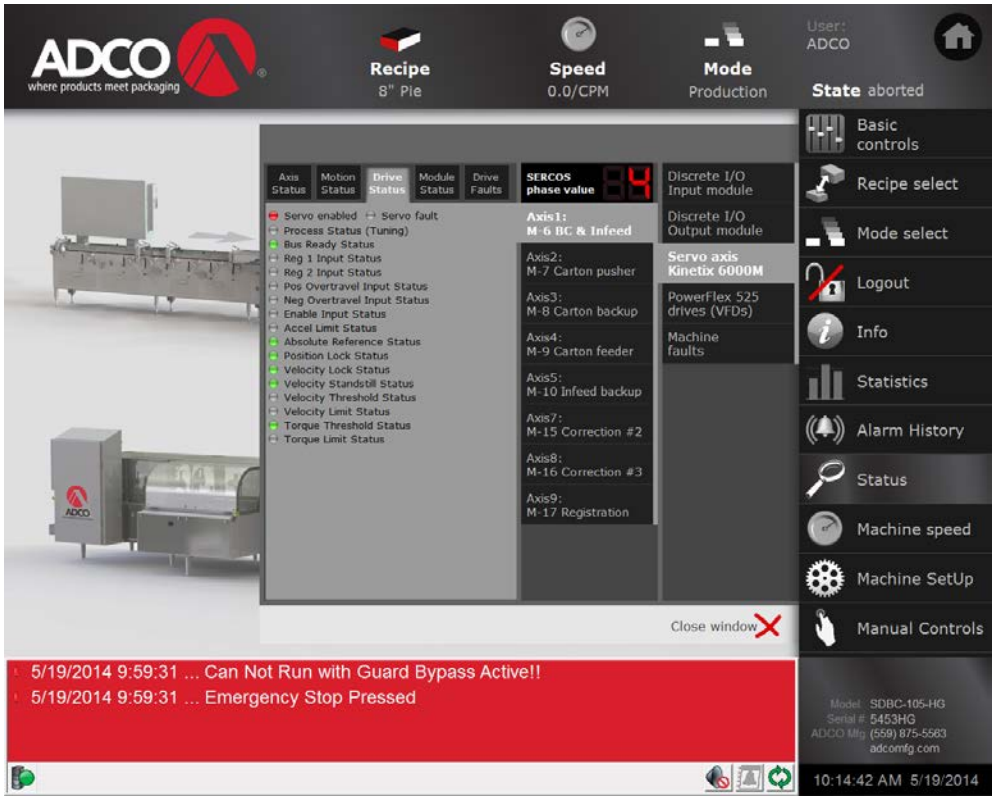

VFD Status Tab

The VFD Status Screen gives the programmed Hertz and the actual Hertz the drive is running at. It also displays the Ready and Faulted Statuses of the drive. For more details on the statuses of the VFD drive, please see the electronic copy of the PowerFlex 40P VFD Drive Manual on the PDF Manual CD.

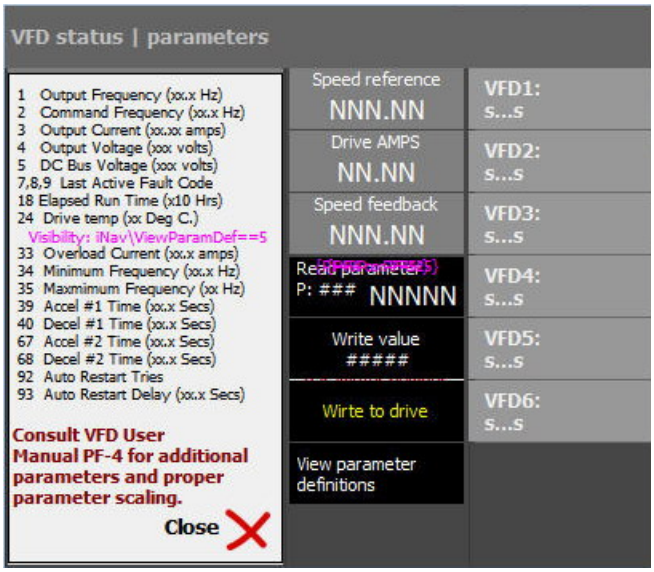

Speed Reference – Displays the programmed speed of the drive in hertz.

Drive Ready Display – Displays a green indicator when the drive is ready to run.

Drive Running – Displays a green indicator when the driven motor is in motion.

Drive Direction – Displays Fwd when moving forward, Rev when moving in reverse.

Drive Faulted – Displays a red indicator when the VFD drive is faulted.

Axis Select – Displays which device the status is being viewed for.

Speed Feedback Display – Displays the actual speed of the drive in Hertz.

Amps – Displays the electrical current being supplied to the VFD motor.

Reading and Writing Parameters to the VFD Drive

- Basics: The PowerFlex 40P VFD has limited functionality from the drive face, and the only through this screen can you make the many of the changes to the drive parameters. Press Help a list of common parameters.
- Setup:
  - Note the changes you would like to make to the drive parameters by referencing the VFD Drive Manual located in Chapter 8 – Component Literature of this manual.
  - Enter the parameter number to be changed or viewed into the Read Parameter Button.

- If a change is to be made, enter the new value into Write Value Button.
- Press and hold the WRITE to write the new value to the parameter shown on the Read Parameter Button.

Machine Faults Tab

The Machine Mode Status Screen allows a quick glance of any issues that need to be resolved before the machine can be started. Each machine status has an indicator to determine what action is needed to get the machine started.

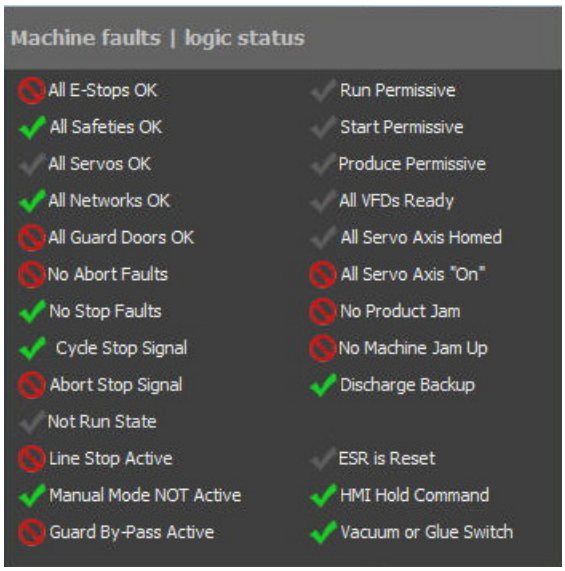

The indicator statuses are as follows:

Green Status – Indicator shows that the device shown is ready and has no issues to prevent the machine from running.

Grey Status – Indicator shows there is no signal coming from the device shown.

Red Status – Indicator shows there is no signal coming from the device shown, but a signal is needed before the machine can be run.

Machine Speed Tab

Sets the different speeds for the machine. The speed is displayed in Cartons per Minute.

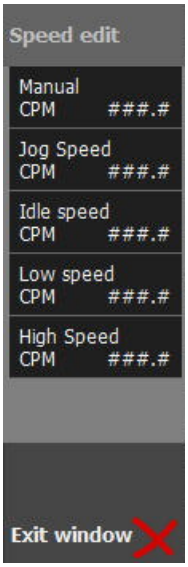

NOTE: The speed adjustments will be affected by functions on other screens.

Jog Speed - Displays and selects when pressed, the speed the machine will run while running in Maintenance (Jog) Mode.

Run Speed - Displays and selects when pressed, the speed the machine will run when in Production Mode.

Machine Setup Tab

Positions – Opens the Position Based Controls Tab. Sets windows, cams and other positions.

Machine Parameters – Opens the Machine Parameters Tab. Sets the constant data needed for most of the machine functions.

Servo Axis - OPens

Position Based Controls Tab

The Position Based Controls Screen shows some of the position based function, such as position windows and machine trigger positions. This screen also shows where there these functions are enabled throughout the machine cycle.

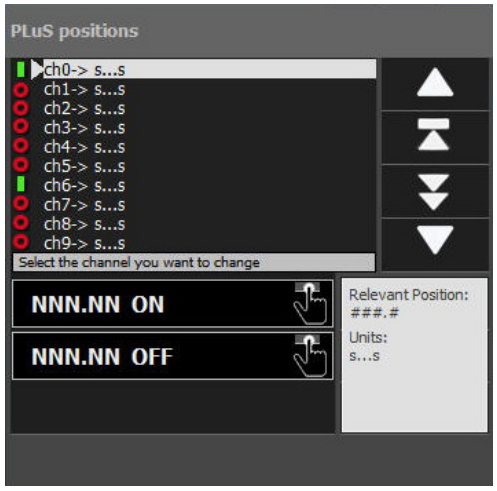

Relevant Position Display – Shows the position where the machine is now, it is displayed in inches.

▲ and ▼ Buttons – These move the highlight up and down the channel list display. When a Channel is highlighted, it is shown on the "ON" and "OFF" Position Displays.

Channel Status Display – Shows the status of the particular function channel.

- I - the channel is ON and functioning.
- O - the channel is OFF.

"ON" Position – Displays and selects when pressed, the position the highlighted channel listed on the channel display turns ON in degrees.

"OFF" Position – Displays and selects when pressed, the position the highlighted channel listed on the channel display turns OFF in degrees.

Channels:

Carton Pick – Controls the position the PE-1 Product Present Vacuum Pick Control Photo –Eye can look for product.

- **On** – Typically 15 degrees before the pick eye should be detecting the product.
- **Off** – Typically before the vacuum cups on the feeder reach the residual on the vacuum manifold.

Vacuum Valve Control – Controls the position the feeder can hold vacuum before placing the carton in the main flights.

- **On** – Typically 15 degrees before the pick eye should be detecting the product.
- **Off** – Typically before the vacuum cups on the feeder reach the residual on the vacuum manifold.

Confirm Pick – Controls the position the PE-2 Carton Confirm Photo Eye can check for sleeve.

- ON and OFF points need to be 30 degrees apart and the photo eye has a clear view of the sleeve.

Cycle Stop – Controls where the machine stops after a cycle stop button has been pressed.

- **ON** – Turns ON just after the sleeve passes the glue gun.
- **OFF** – Turns OFF just before the carton reaches the compression.

NOTE: The cycle stop window should NOT be located in a location where the carton is in front of the glue gun.

Machine Parameters

The Machine Parameters Tab sets the Data parameters for the various machine functions.

Glue Gun Speed Comp START and STOP – Displays and selects when pressed, the speed compensation value for the glue guns to correct for varying machine speed.

Setting the Low Magazine Warning and Shutdown Counts:

- Basics: The Hopper Count buttons are intended to keep sleeves in the hopper for safety of the operator when the hopper level drops.
- Setup:
  1. Place the sensor 10” to 12” away from the Hopper Slope.
     - For higher speed machines, the photo eye may need to be placed further away from the hopper slope.
  2. Place sleeves in the hopper until the Low Hopper eye is blocked.
  3. Count or calculate the amount of sleeves to the Hopper Slope.
  4. Place that amount in the Low Hopper Fault Count.
  5. Halve the Hopper Fault Count and place that amount in the Hopper Warning Count.
- Test: The machine should stop before the hopper block begins to go down the slope in the hopper via the Low Hopper Fault Count. The Low Hopper Warning is purely of preference and triggers the audible alert before the Low Hopper Fault Count is triggered.

Low Glue Warning Count – Displays and selects when pressed, the amount of cartons picked after the glue melter has triggered a low glue level alert that the warning buzzer sounds with a low glue pot level warning alarm on the main screen.

NOTE: ADCO uses the low level glue output on the glue melter to indicate the low glue level warning. Please see pages 4-16 of the Nordson Manual on how the low glue level sensor works.

Low Glue Shutdown Fault – Displays and selects when pressed, the number of cartons picked until the machine comes to a stop due to a low glue level in the suspend state.

Vacuum Drop Speed Comp – Displays and selects when pressed, the speed compensation value for the vacuum drop position to correct for varying machine speed.

Glue Eye Fault Timer – Displays and selects when pressed, the amount of time the PE-3 Glue Pattern Control Enable Photo Eye must be blocked before triggering a Glue Area Fault.

NOTE: This value must be set high enough to allow one carton to pass, or else the machine will fault on every carton that passes. This timer is needed to detect cartons hung up in front of the PE-3 Photo Eye and glue gun.

Pick Eye Fault Timer – Displays and selects when pressed, the amount of time the PE-1 Product Present Vacuum Pick Control Eye needs to be blocked before triggering a Pick Area Fault.

Servo Axis Settings Tab

When the setup button is pressed on the Main Setup Screen for a servo drive, the data for the servo drive is loaded into the Servo Constant Data Screen. Here data can be modified for the servo drive selected.

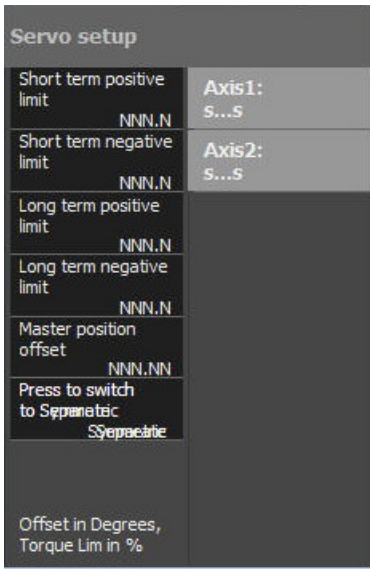

Short Term Positive Torque Limit - Displays and selects when pressed, the short term torque limit in the forward motion, such as when starting, for the selected servo motor.

· Entered in percent of maximum torque of the motor.

· Normal short term duration is 30 milliseconds.

Short Term Negative Torque Limit - Displays and selects when pressed, the short term torque limit in the reverse motion, such as when starting in the opposite direction, for the selected servo motor.

· Entered in percent of maximum torque of the motor.

· Normal short term duration is 30 milliseconds.

Long Term Positive Torque Limit - Displays and selects when pressed, the long term, running, torque limit for the selected servo motor.

· Entered in percent of maximum torque of the motor.

· Normal long term duration is 200 milliseconds.

Long Term Negative Torque Limit - Displays and selects when pressed, the long term, reversing, torque limit for the selected servo motor.

· Entered in percent of maximum torque of the motor.

· Normal long term duration is 200 milliseconds.

Offset - Displays and selects when pressed, the position offset for the selected motor.

Symmetric / Separate - Switches between the symmetric and separate torque entry modes. Displays how the data is entered for the positive and negative torque limits.

Symmetric - When data is entered for a positive limit, the negative of that value is entered for the negative limit automatically.

Separate - Data is entered separately for each field, an example would be a compensation for gravity causing the negative limit to be smaller than the positive limit.

PowerFlex 525 Settings Tab

When the setup button is pressed on the Main Setup Screen for a drive, the data for the drive is loaded into the Motion Drive Settings Screen. Here data can be modified for the VFD drive selected.

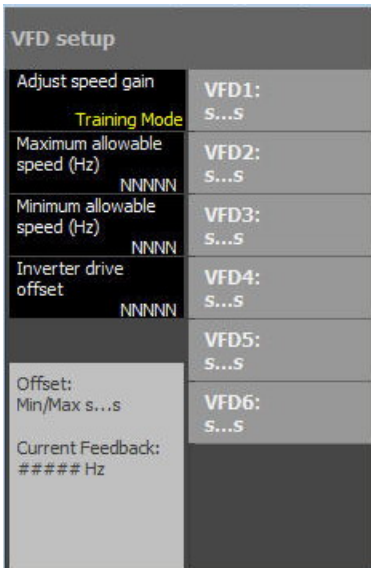

Network – Turns the network functions of the attached VFD drive on or off when pressed. When the network functions are turned on, the indicator will turn green.

NOTE: Turning the network functions on and off will cause changes on the VFD Status Screen for the current VFD.

Reverse – Turns the directional controls on the VFD Manual Control Screen for the selected drive on and off, the indicator turns green when the controls enabled.

NOTE: These changes are reflected on the VFD Manual Controls Screen.

Understanding the Gain and Offset:

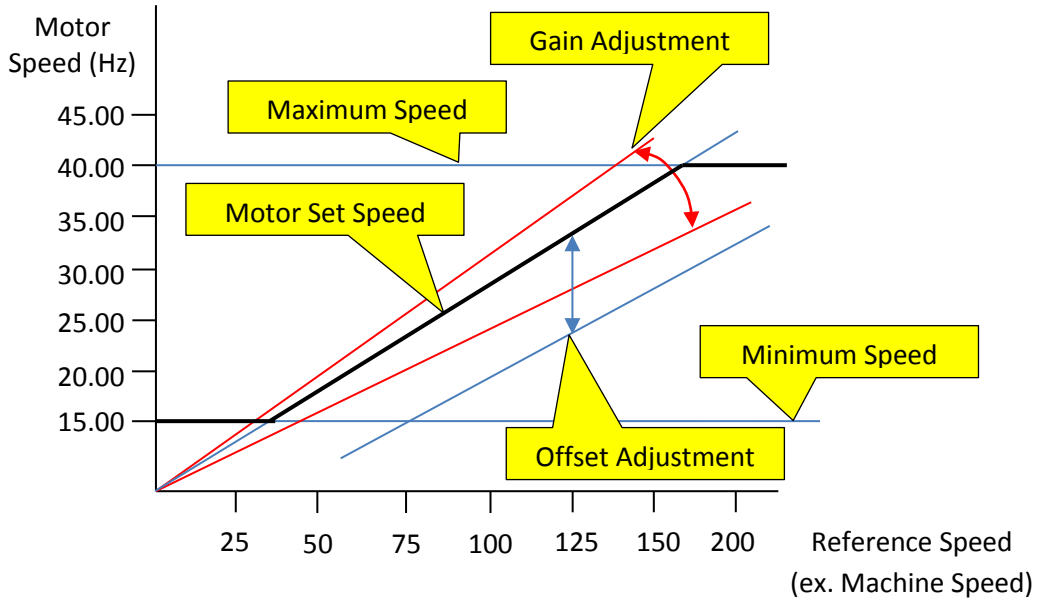

- Basics: Setting the Gain and Offset helps control the motor speed when the machine changes speed.
- Setup (With Hand Tachometer):
  1. Run the machine at a low speed (example being low or jog speed).
  2. Set the Gain and Min Speed to Zero.
  3. Using only the Offset, adjust the speed of the Motor until desired effect is reached.
  4. Measure the speed of the driven component, belt, or table top chain.
  5. Run the machine at a higher speed, preferably closer to full operating speed.
  6. Adjust the Offset for the motor until the desired effect is reached.
  7. Measure the speed of the driven component, belt, or table top chain.
  8. Adjust the Gain:
     a. Increasing the Gain will increase the high and low ends of the motor.
     b. Adjust the offset if the high and low ends if they are off by the same amount.
  9. If the motor has a speed that it cannot drop below, set the minimum speed so the motor cannot run slower than the amount, same for the maximum speed.
- Test: Run the machine at multiple speeds to test the gain and offset values to make sure they are adequately set. Continue to adjust the gain and offset values until the desired effect is reached, several adjustments may be necessary.

Hopper Advance Tab

The Hopper Advance Tab shows the controls for hopper chains and timers.

Hopper Manual Advance - Activates the hopper advance high speed movement while pressed.

Hopper Advance Start Delay - Displays and selects when pressed, the amount of time the PX-3 Low Level sensor must be unblocked before the hopper advances until it is re-blocked.

Hopper Advance Base Speed - Displays and selects when pressed, the speed the hopper advance gearmotor will run normally, measured in percentage of total gearmotor speed.

Hopper Advance High Speed Gain - Displays and selects when pressed, the speed multiplier used to increase the machine speed when the PX-3 Low Level sensor is blocked.

Device Manual Control Selection Screen

When an operator first presses the Manual Button on the bottom of the Main Screen, this is the screen that is displayed first. It allows selection of an output slot or VFD drive for manual control and the selected device can be jogged or manipulated independently from the rest of the machine.

Discrete Output – Goes to the Discrete Output Manual Control Select Tab.

Servo Axis 6000M – Goes to the Servo Axis Manual Control Select Tab.

PowerFlex 525 Drive – Goes to the VFD Manual Control Select Tab.

Manual Control Output

The Discrete Output Manual Control Screen allows the operator to check the operation of the output channel by manually triggering the outputs. Check the electrical schematic in Chapter 7 to find what device is turned on by which output channel.

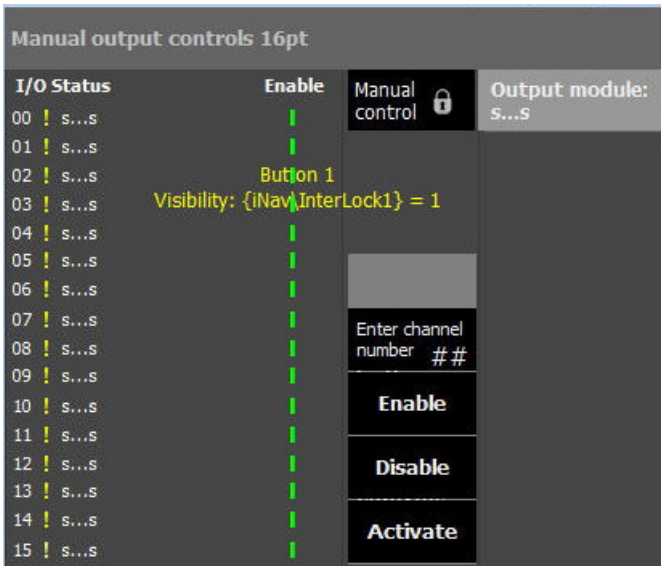

NOTE: The machine must be in Manual Control Mode and in the Execute State before being able to manually operate machine devices. After the Assume Manual Control button, the blue reset button needs to be pressed to allow the safety system to reset. Afterward, the outputs can be activated by pressing the Activate Button.

Assume Manual Control

- When the machine is in any other run mode, it will display “Assume Manual Control.” The operator then needs to press it to put the machine in manual control mode (Login Required).
- When the machine is in Manual Control Mode, it will display Manual Control Active.

Enabled - The selected Channel will be jogged when the Activate Button is pressed.

Disabled - The selected Channel will be jogged when the Activate Button is pressed.

Activate - This will turn the enabled channels on when pressed.

Manual Control VFD

The VFD Drive Manual Control Screen allows the operator to check the status and jog the individual motors on the machine. Check the electrical schematic in Section 7 find what motor is jogged.

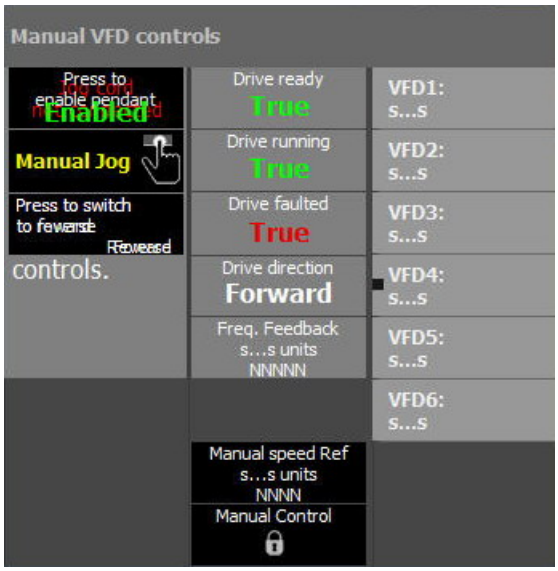

NOTE: The machine must be in Manual Control Mode and in the Execute State before being able to manually operate machine devices.

Frequency Feedback – Displays the programmed frequency the VFD is being commanded to run.

Jog - Moves the selected motor in the direction selected while pressed.

- The machine must be in Manual Control Mode for the Jog button to appear.
- Disappears when the Pendant / Jog Cord is enabled for safety considerations.

Pendant Enabled - When the Jog Cord / Pendant is plugged in, it can be enabled to jog the selected drive.

Drive Ready Display - Displays the status of the drive as either ready (green) or not ready (red). The drive ready display must be green to jog the drive.

Drive Running Display - Displays the running status of the drive as either running (green) or not (grey).

Drive Faulted Display - Displays the status of the drive as either ready (green) or not ready (red). The drive faulted display must be green to jog the drive.

Drive Direction - Displays the direction the drive is running.

- Green - The motor is running in the forward direction.
- Yellow - The motor it running in the reverse direction.

Speed Reference Display - This shows the value given for the VFD speed to jog the drive.

Reverse / Forward Switch - Selects which direction the selected servo axis can be jogged.

Assume Manual Control

- When the machine is in Manual Control Mode, it will display “Manual Control Active”.
- When the machine is in any other run mode, it will display “Assume Manual Control.” The operator then needs to press it to put the machine in manual control mode.

Manual Control Servo

The Manual Controls Screen provides controls to run each axis independently from the others while in manual control mode. It also provides the controls to re-home a servo axis if needed.

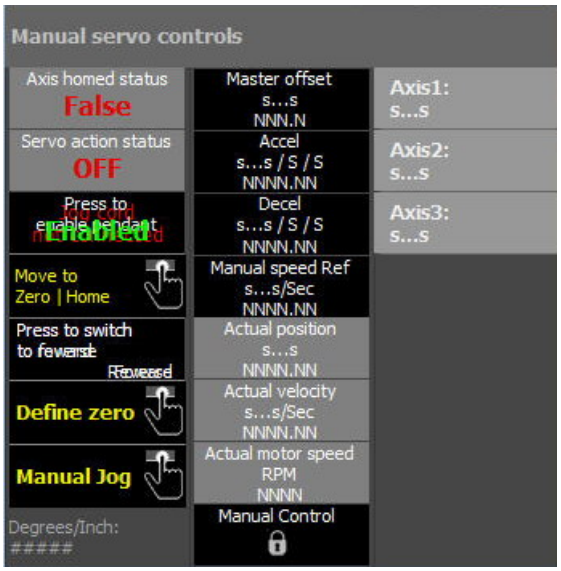

NOTE: The machine must be in Manual Control Mode and in the Execute State before being able to manually operate machine devices. It is not recommended to jog the machine axis in reverse for long periods due to possible machine damage.

Master Offset – Displays and selects when pressed, the total offset of the servo from the machines master zero position.

Accel - Displays and selects when pressed, the acceleration rate for the servo axis measured in degrees / degrees / Second.

Decel - Displays and selects when pressed, the deceleration rate for the servo axis measured in degrees / degrees / Second.

Manual Mode Reference Display - Displays and selects when pressed, the speed at which the servo will run when the HMI jog button is pressed.

Actual Position - Displays the current position for the selected servo axis.

Actual Velocity - Displays the current velocity for the selected servo axis.

Actual Motor RPM Display - Displays the current servo motor speed in Revolutions per Minute.

Manual Control Active - Displays wither or not the machine is in the manual control mode. If it is not, it shows "Assume Manual Control".

Reverse / Forward Switch - Selects which direction the selected servo axis can be jogged.

NOTE: The selected axis cannot be jogged unless the display shows “Manual Control Active”.

HMI Jog Button - Moves the selected motor in the direction selected while pressed.

- The machine must be in Manual Control Mode for the Jog button to appear.
- Disappears when the Pendant / Jog Cord is enabled.

Enable Pendant - The enable pendant button only appears when the Jog Cord / Pendant is plugged in, it allows the operator to jog the selected axis with the Jog Cord.

Define Zero Position - Re-defines the current position of the selected axis as home.
NOTE: This function is required when a servo motor and/or amplifier (drive) is replaced. It may be needed when a mechanical adjustment or repair is performed on the driven components.

Axis Homed Display - Indicates whether or not the servo was homed. When the indicator display (grey circle) is green, it means the servo was initially homed and is active.

Emergency Stop Locations

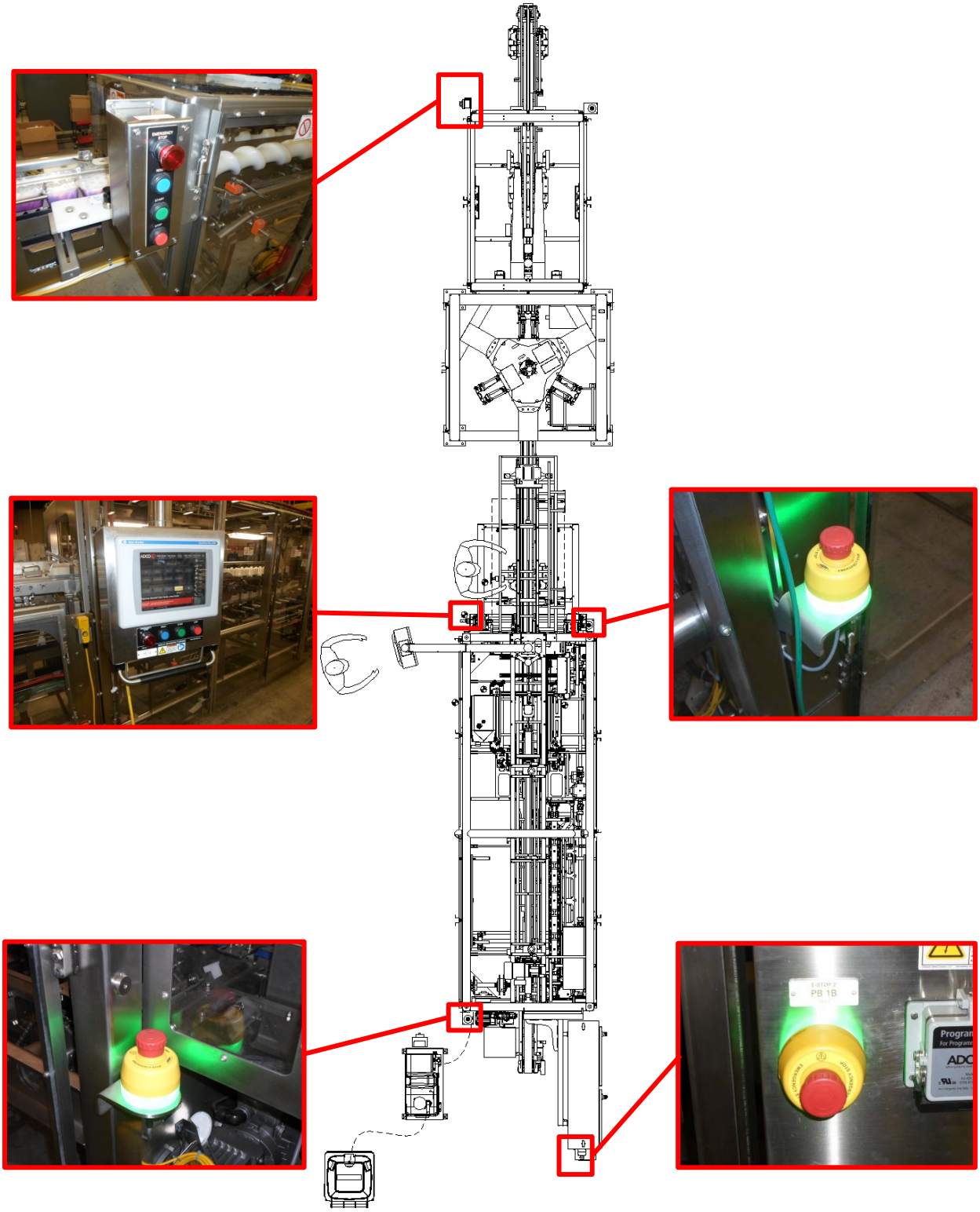

Guard Door Interlocks

This machine is equipped with electrically interlocked guards that stop the machine when a guard is opened during the running of the machine. This is to protect the operators, and keep them from reaching into or under the machine while it is running.

GUARD DOOR INTERLOCK

WARNING

Do not alter the guard interlock system as personal injury may occur.

(See Chapter 1 – Safety of this manual for additional safety information.)

Photo Eye Types and Descriptions

Diffuse Photo Eyes – Diffuse photo eyes are used for detecting objects directly.

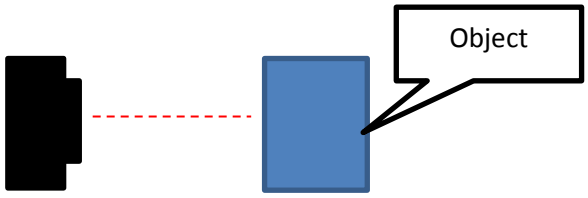

Retro-Reflective Photo Eyes – Retro-reflective Photo Eyes are used for detecting an object that passes between it and the associated reflector.

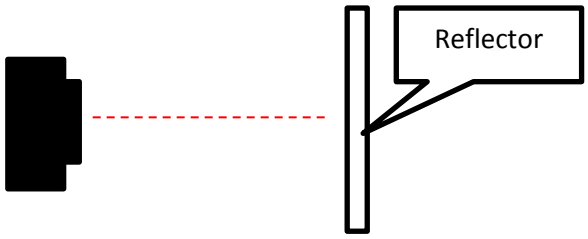

Fiber Optic Photo Eyes with Separate Cables – Fiber Optic Eyes with separate cables are used for detecting an object that passes between the emitter and receiver cables.

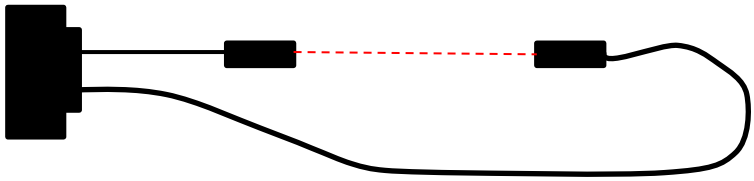

Fiber Optic Photo Eyes with Bifurcated Cables – Fiber Optic Eyes with bifurcated cables are used for detecting an object directly. They can also be used a reflector like a Retro-Reflective Photo Eye.

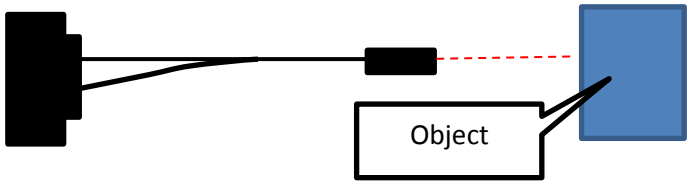

Proximity Sensors and Photo Eyes

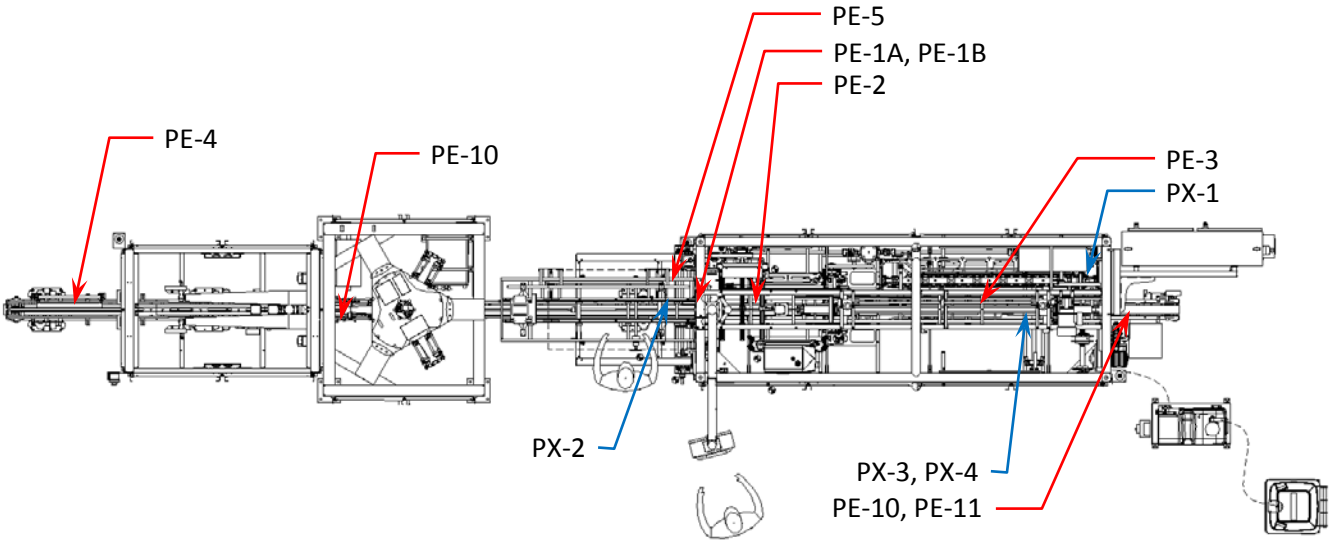

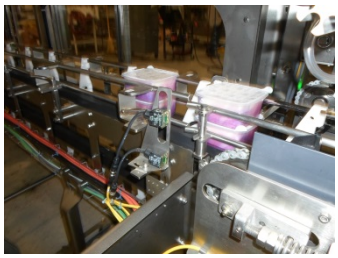

PE-1A & 1B Pick Photo Eye

- When blocked by product, the vacuum is enabled for the feeder.
- Prevents the feeder from picking product if wrong product configuration.
- Retro-Reflective Photo-Eye

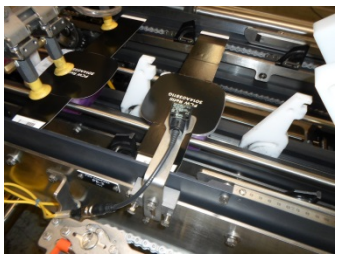

PE-2 Pick Confirm Photo Eye

- Confirms the Sleeve was picked.
- Stops the machine to a “Pick Fault” when 3 sleeves were miss-picked in a row.
- Diffuse Photo Eye

PE-3 Glue Enable Photo Eye

- Enables the Glue Gun for one cycle when blocked by a sleeve.
- Triggers a “Glue Area Blocked Fault” when blocked for too long.
- Diffuse Photo Eye

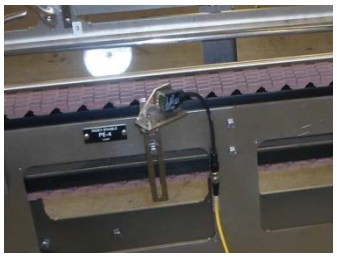

PE-4 Product at Screw, Screw Advance Photo Eye

- Enables the Indexer when blocked when blocked for a designated amount of time.
- Enables low speed operation when blocked when blocked for a designated amount of time.
- Retro-Reflective Photo Eye

PE-5 Magazine Low Level Photo Eye

- When unblocked, the blue beacon light becomes lit.
- When unblocked and a set amount of sleeves are picked, an audible alarm is signaled and a message is displayed to refill hopper.
- When unblocked and a set amount of sleeves are picked, the machine comes to a stop with a low hopper fault.
- Diffuse Photo Eye

PE-6 Downstream Backup (Area Full) Photo Eye

- Stops the machine when blocked for a designated amount of time to allow downstream equipment to catch up, and then restarts the machine when unblocked for a time.
- Retro Reflective Photo Eye

PE-7 Mid Speed Enable Photo Eye

- Enables mid-speed operation when blocked for a designated amount of time.
- Retro-Reflective Photo Eye

PE-8 Top Speed Enable Photo Eye

- Enables high speed operation when blocked for a designated amount of time.
- Retro-Reflective Photo Eye

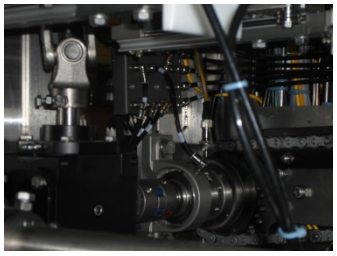

PX-1 Main Drive Overload Detect Sensor

- Stops the machine when the Overload Clutch is tripped.
- Must be unmade before the machine can be restarted.

PX-2 Hopper Advance Sensor

- When unblocked, it activates the Hopper Advance Motor high speed mode.

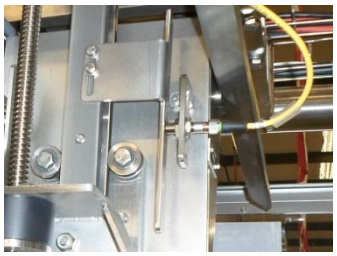

PX-3 Overload Upper Travel Limit Sensor

- Stops the Overhead from ascending too far up.

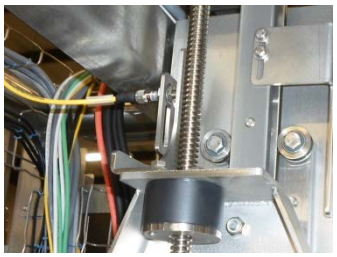

PX-4 Overhead Lower Travel Limit Sensor

- Stops the Overhead from descending too far down.

Torque Limiting Clutch

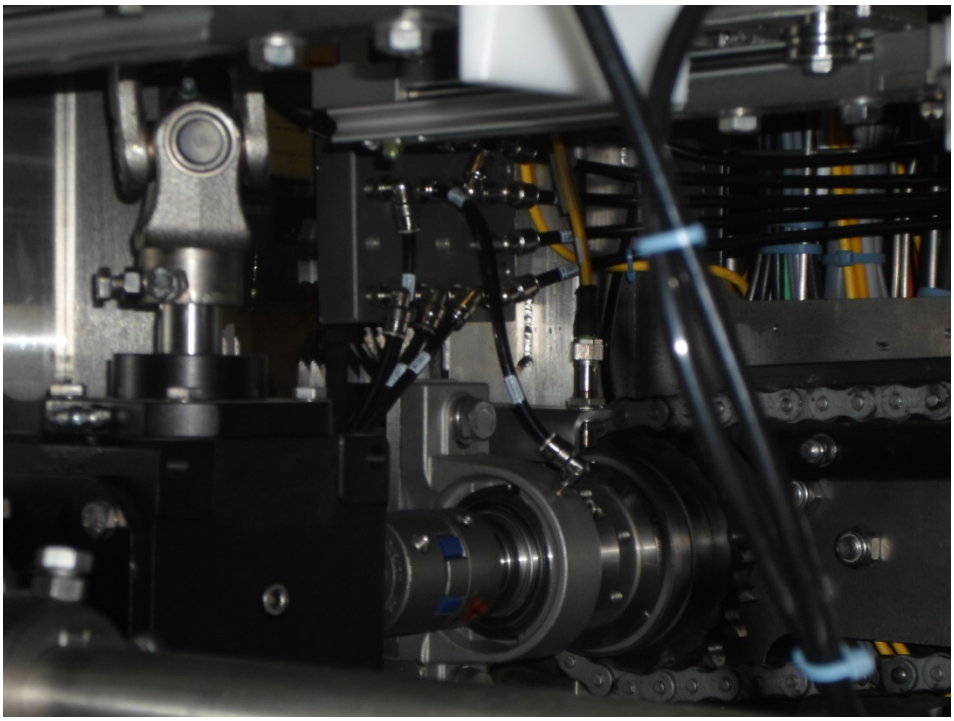

- This machine is equipped with a detent clutch that disengages the drive motor from the machine when a jam occurs. This feature is to help prevent damage and injury to the operator. When the overload kicks out, find and clear all jams before restarting the motor. To reset the clutch, jog the machine.
- To jog the machine, select the JOG MODE on the main screen, and press START on the jog cord controls. Repeat this procedure as required. After the clutch has made approximately three revolutions, it should reset. When the clutch re-engages, it will make an audible “POP”. Watch the flight chains to move continuously when you are unable to hear the “POP”.

Four Color Stack Light

The Four Color Stack Light indicated numerous meaning pending on which lights are solid and which are flashing.

Solid Red Light – Machine Fault or Alarm, Ready to Reset

Flashing Red Light – Guard Door Open and / or Emergency Stop Down

Steady Amber Light – Ready to Run, Feeder in Jog Mode.
Flashing Amber Light – Servo Zeroing

Steady Green Light – Machine Running Normally

Flashing Green Light – Cycle Stopped (Held)

Green and Amber Alternating – Downstream Condition has stopped the machine, will Auto-Start when the condition is cleared.

Blue Steady Light – Low Carton Hopper

Flashing Blue Light – Low Glue Melter Level

Glue System

Main Glue Unit

Full-Fill Unit

Glue Gun

- Before starting the machine, the glue should be allowed to come to full operating temperature. Typically, the unit needs a minimum of 1/2 hour to warm-up. See the glue unit manual shipped with this machine for complete instructions.
- This machine is equipped with an individual Lock-out box for the Nordson glue unit. When in the “ON” position, the glue unit can be powered for supplying power to the Nordson glue unit without any other power being supplied to the machine. This is helpful for turning “ON” the glue unit prior to running the machine. The glue unit warm-up time can take place without power being supplied to the machine, making it safe for adjustments prior to running.
- The Nordson Lock-out can only be Locked-out in the “OFF” position, allowing no power to the unit. It cannot be lock-out in the “ON” position.
- The Nordson Glue Unit can be programmed for start and stop operation. When programmed, the Lock-Out does not need to be locked-out. The Lock-Out should be used any time the machine is being serviced. Refer to the supplied Nordson Manual shipped with this machine for programming.

Chapter 5 – Adjustments

This Chapter of the Service Manual covers the machine sections, changeover and associated settings, and additional settings not needed for changeover.

Table of Contents

Chapter 5 – Adjustments 5-1
- Machine Adjustment Settings Locations 5-3
  - Changeover Points 5-3
  - Expad 1X 5-4
  - Expad 2X 5-5
  - EMU 1X 5-6
  - EMU 2X 5-7
  - FCW 1X 5-8
  - FCW 2X 5-9
- Machine Factory Settings 5-10
  - Glue System Settings 5-10
  - HMI Screen Settings 5-10
  - Recipe Settings 5-13
  - Recipe: EXPAD 1X 5-13
  - Recipe: EXPAD 2X 5-13
  - Recipe: FCW 1X 5-14
  - Recipe: FCW 2X 5-14
  - Recipe: EMU 1X 5-15
  - Recipe: EMU 2X 5-15
- Machine Layout 5-16
- Machine Sections 5-17
  - Infeed / Indexing Section 5-17
  - Stacking Section 5-18
  - Picking Section / Overhead Conveyor 5-19
  - Side Compression / Overhead Conveyor Section 5-20
- Changeover Sequence 5-21

Adjustment Instructions 5-23

Adjustment 1: Scale and Pointer Adjustments 5-23

Adjustment 2: Offset Guide Change Out 5-24

Adjustment 3: Indexing Screw Changeout 5-25

Adjustment 4: Digital Counter Adjustments 5-26

Adjustment 5: Main Product Conveyor Side Guides 5-27

Adjustment 6: Overhead Lug Changeout 5-28

Adjustment 7: Plow Down Adjustments 5-29

Adjustment 8: Magazine Gate Changeout 5-30

Adjustment 9: Chain Phase Adjustments 5-31

Adjustment 10: Recipe Change 5-32

Machine Adjustment Settings Locations

Changeover Points

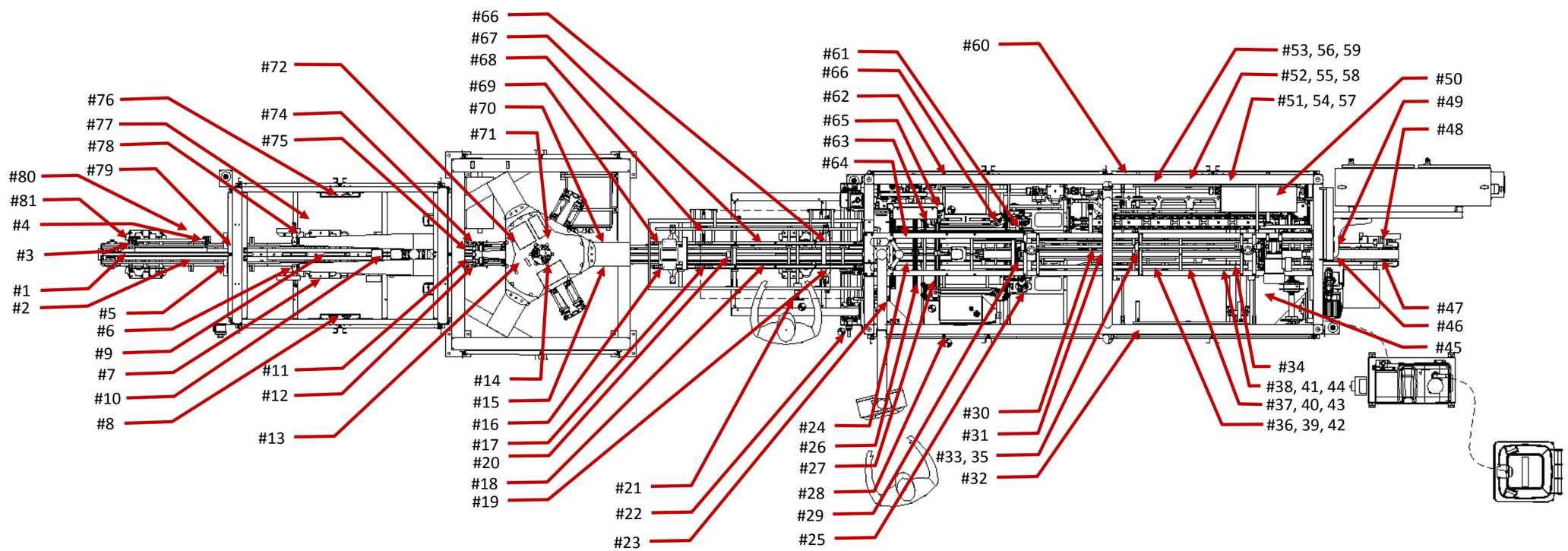

Expad 1X

2x	Item	Description	Factory	Field
	1	Infeed Side Guide	20	
	2	Infeed Side Guide	20	
	3	Overhead Up / Down Adjustment	55	
	4	Overhead Up / Down Adjustment	55	
	5	Right Offset Guide Changeout	Rectangle	
	6	Right Indexing Screw Changeout	M-6767496-3	
	7	Right Indexing Screw Up / Down	00438	
	8	Right Indexing Screw In / Out	00386	
	9	Overhead Guide Rail Vertical Adjustment	49	
	10	Overhead Guide Rail Vertical Adjustment	49	
	11	Right Index Transition Plate Up / Down	46	
	12	Right Index Transition Plate In / Out	20	
	13	Right Double Infeed Side Guide	20	
	14	Right Double Infeed Side Guide	20	
	15	Right Double Infeed Side Guide	20	
	16	Right Double Infeed Side Guide	20	
	17	Right Double Infeed Side Guide	20	
	18	Right Double Infeed Side Guide	20	
	19	Right Double Infeed Side Guide	20	
	20	Magazine In / Out Adjustment	01000	
	21	Magazine Side Guide In / Out	00722	
	22	Magazine Up / Down Adjustment	00700	
	23	Magazine Face Plate Change Out	Rectangle	
	24	Right Main Product Conveyor Side Guide Change Out	Single	
	25	Right Transfer Chain Phase Adjustment	93	
	26	Feeder Vacuum Cup Position	No Change	
	27	Right Transfer Chain Up / Down Adjustment	00755	
	28	Right Transfer Chain In / Out Adjustment	00564	
	29	Flap Plow Angle Adjustment	?	
	30	Overhead Conveyor Carrier Lug Change Out	Expad 1X	
	31	Overhead Conveyor Pusher Lug Change Out	Expad 1X	
	32	Traveling Compression (Barrel Cam) In / Out Adjustment	00246	
	33	Glue Gun Vertical Adjustment	5	
	34	Squaring Chain Phase Adjustment	85	
	35	Closing Plow / Tongue Adjustment	Expad 1X	
	36	Right Closing Side Guide Vertical Adjustment	31	
	37	Right Closing Side Guide Vertical Adjustment	33	
	38	Right Closing Side Guide Vertical Adjustment	36	
	39	Right Upper Closing Side Guide Horizontal Adjustment	55	
	40	Right Upper Closing Side Guide Horizontal Adjustment	55	
	41	Right Upper Closing Side Guide Horizontal Adjustment	55	
	42	Right Lower Closing Side Guide Horizontal Adjustment	52	

2x	Item	Description	Factory	Field
	43	Right Lower Closing Side Guide Horizontal Adjustment	26	
	44	Right Lower Closing Side Guide Horizontal Adjustment	22	
	45	Traveling Compression (Barrel Cam) Phase Adjustment	28	
	46	Right Disharge Conveyor Upstream Adjustment	32	
	47	Right Disharge Conveyor Downstream Adjustment	53	
	48	Left Disharge Conveyor Downstream Adjustment	33	
	49	Left Disharge Conveyor Upstream Adjustment	55	
	50	Overhead Conveyor Phase Adjustment	75	
	51	Left Closing Side Guide Vertical Adjustment	31	
	52	Left Closing Side Guide Vertical Adjustment	32	
	53	Left Closing Side Guide Vertical Adjustment	33	
	54	Right Upper Closing Side Guide Horizontal Adjustment	55	
	55	Right Upper Closing Side Guide Horizontal Adjustment	55	
	56	Right Upper Closing Side Guide Horizontal Adjustment	55	
	57	Right Lower Closing Side Guide Horizontal Adjustment	22	
	58	Right Lower Closing Side Guide Horizontal Adjustment	22	
	59	Right Lower Closing Side Guide Horizontal Adjustment	27	
	60	Traveling Compression In / Out Adjustment	00104	
	61	Flap Plow Angle Adjustment	?	
	62	Left Transfer Chain In / Out Adjustment	00382	
	63	Left Transfer Chain Up / Down Adjustment	00769	
	64	Main Product Conveyor Right Side Guide Change Out	Expad 1X	
	65	Carton Feeder Up / Down Adjustment	00327	
	66	Left Transfer Chain Phase Adjustment	90	
	67	Left Double Infeed Side Guide	23	
	68	Left Double Infeed Side Guide	23	
	69	Left Double Infeed Side Guide	23	
	70	Left Double Infeed Side Guide	23	
	71	Left Double Infeed Side Guide	23	
	72	Left Double Infeed Side Guide	23	
	73	Left Double Infeed Side Guide	23	
	74	Left Index Transition Plate In / Out	33	
	75	Left Index Transition Plate Up / Down	49	
	76	Left Indexing Screw In / Out	00408	
	77	Left Indexing Screw Up / Down	00463	
	78	Left Indexing Screw Changeout	M-67476-3A	
	79	Left Offset Guide Changeout	Rectangle	
	80	Infeed Side Guide	19	
	81	Infeed Side Guide	19	

Expad 2X

1x	Item	Description	Factory	Field
	1	Infeed Side Guide	20	
	2	Infeed Side Guide	20	
	3	Overhead Up / Down Adjustment	55	
	4	Overhead Up / Down Adjustment	55	
	5	Right Offset Guide Changeout	Rectangle	
	6	Right Indexing Screw Changeout	M-6767496-3	
	7	Right Indexing Screw Up / Down	00438	
	8	Right Indexing Screw In / Out	00386	
	9	Overhead Guide Rail Vertical Adjustment	49	
	10	Overhead Guide Rail Vertical Adjustment	49	
	11	Right Index Transition Plate Up / Down	46	
	12	Right Index Transition Plate In / Out	20	
	13	Right Double Infeed Side Guide	20	
	14	Right Double Infeed Side Guide	20	
	15	Right Double Infeed Side Guide	20	
	16	Right Double Infeed Side Guide	20	
	17	Right Double Infeed Side Guide	20	
	18	Right Double Infeed Side Guide	20	
	19	Right Double Infeed Side Guide	20	
	20	Magazine In / Out Adjustment	01003	
	21	Magazine Side Guide In / Out	01077	
	22	Magazine Up / Down Adjustment	01049	
	23	Magazine Face Plate Change Out	2 Rectangle	
	24	Right Main Product Conveyor Side Guide Change Out	Expad 2x	
	25	Right Transfer Chain Phase Adjustment	93	
	26	Feeder Vacuum Cup Position	No Change	
	27	Right Transfer Chain Up / Down Adjustment	01077	
	28	Right Transfer Chain In / Out Adjustment	00866	
	29	Flap Plow Angle Adjustment	?	
	30	Overhead Conveyor Carrier Lug Change Out	Expad 2X	
	31	Overhead Conveyor Pusher Lug Change Out	Expad 2X	
	32	Traveling Compression (Barrel Cam) In / Out Adjustment	00246	
	33	Glue Gun Vertical Adjustment	3	
	34	Squaring Chain Phase Adjustment	80	
	35	Closing Plow / Tongue Adjustment	Expad 2X	
	36	Right Closing Side Guide Vertical Adjustment	28	
	37	Right Closing Side Guide Vertical Adjustment	28	
	38	Right Closing Side Guide Vertical Adjustment	35	
	39	Right Upper Closing Side Guide Horizontal Adjustment	41	
	40	Right Upper Closing Side Guide Horizontal Adjustment	37	
	41	Right Upper Closing Side Guide Horizontal Adjustment	29	
	42	Right Lower Closing Side Guide Horizontal Adjustment	49	

1x	Item	Description	Factory	Field
	43	Right Lower Closing Side Guide Horizontal Adjustment	42	
	44	Right Lower Closing Side Guide Horizontal Adjustment	30	
	45	Traveling Compression (Barrel Cam) Phase Adjustment	30	
	46	Right Disharge Conveyor Upstream Adjustment	32	
	47	Right Disharge Conveyor Downstream Adjustment	53	
	48	Left Disharge Conveyor Downstream Adjustment	32	
	49	Left Disharge Conveyor Upstream Adjustment	55	
	50	Overhead Conveyor Phase Adjustment	75	
	51	Left Closing Side Guide Vertical Adjustment	33	
	52	Left Closing Side Guide Vertical Adjustment	32	
	53	Left Closing Side Guide Vertical Adjustment	31	
	54	Right Upper Closing Side Guide Horizontal Adjustment	28	
	55	Right Upper Closing Side Guide Horizontal Adjustment	26	
	56	Right Upper Closing Side Guide Horizontal Adjustment	21	
	57	Right Lower Closing Side Guide Horizontal Adjustment	24	
	58	Right Lower Closing Side Guide Horizontal Adjustment	24	
	59	Right Lower Closing Side Guide Horizontal Adjustment	29	
	60	Traveling Compression In / Out Adjustment	00104	
	61	Flap Plow Angle Adjustment	?	
	62	Left Transfer Chain In / Out Adjustment	00696	
	63	Left Transfer Chain Up / Down Adjustment	01111	
	64	Main Product Conveyor Right Side Guide Change Out	Expad 2X	
	65	Carton Feeder Up / Down Adjustment	00650	
	66	Left Transfer Chain Phase Adjustment	85	
	67	Left Double Infeed Side Guide	23	
	68	Left Double Infeed Side Guide	23	
	69	Left Double Infeed Side Guide	23	
	70	Left Double Infeed Side Guide	23	
	71	Left Double Infeed Side Guide	23	
	72	Left Double Infeed Side Guide	23	
	73	Left Double Infeed Side Guide	23	
	74	Left Index Transition Plate In / Out	20	
	75	Left Index Transition Plate Up / Down	49	
	76	Left Indexing Screw In / Out	00408	
	77	Left Indexing Screw Up / Down	00463	
	78	Left Indexing Screw Changeout	M-67476-3A	
	79	Left Offset Guide Changeout	Rectangle	
	80	Infeed Side Guide	20	
	81	Infeed Side Guide	20	

EMU 1X

2x	Item	Description	Factory	Field
	1	Infeed Side Guide	37	
	2	Infeed Side Guide	29	
	3	Overhead Up / Down Adjustment	45	
	4	Overhead Up / Down Adjustment	45	
	5	Right Offset Guide Changeout	Round	
	6	Right Indexing Screw Changeout	M-67476-1	
	7	Right Indexing Screw Up / Down	00400	
	8	Right Indexing Screw In / Out	00412	
	9	Overhead Guide Rail Vertical Adjustment	50	
	10	Overhead Guide Rail Vertical Adjustment	37	
	11	Right Index Transition Plate Up / Down	30	
	12	Right Index Transition Plate In / Out	30	
	13	Right Double Infeed Side Guide	30	
	14	Right Double Infeed Side Guide	30	
	15	Right Double Infeed Side Guide	31	
	16	Right Double Infeed Side Guide	31	
	17	Right Double Infeed Side Guide	31	
	18	Right Double Infeed Side Guide	31	
	19	Right Double Infeed Side Guide	31	
	20	Magazine In / Out Adjustment	00986	
	21	Magazine Side Guide In / Out	00771	
	22	Magazine Up / Down Adjustment	00663	
	23	Magazine Face Plate Change Out	1 Circle	
	24	Right Main Product Conveyor Side Guide Change Out	EMU 1x	
	25	Right Transfer Chain Phase Adjustment	85	
	26	Feeder Vacuum Cup Position	No Change	
	27	Right Transfer Chain Up / Down Adjustment	00734	
	28	Right Transfer Chain In / Out Adjustment	00549	
	29	Flap Plow Angle Adjustment	?	
	30	Overhead Conveyor Carrier Lug Change Out	EMU 1x	
	31	Overhead Conveyor Pusher Lug Change Out	EMU 1x	
	32	Traveling Compression (Barrel Cam) In / Out Adjustment	00273	
	33	Glue Gun Vertical Adjustment	19	
	34	Squaring Chain Phase Adjustment	85	
	35	Closing Plow / Tongue Adjustment	EMU 1X	
	36	Right Closing Side Guide Vertical Adjustment	26	
	37	Right Closing Side Guide Vertical Adjustment	26	
	38	Right Closing Side Guide Vertical Adjustment	25	
	39	Right Upper Closing Side Guide Horizontal Adjustment	55	
	40	Right Upper Closing Side Guide Horizontal Adjustment	55	
	41	Right Upper Closing Side Guide Horizontal Adjustment	55	
	42	Right Lower Closing Side Guide Horizontal Adjustment	31	

2x	Item	Description	Factory	Field
	43	Right Lower Closing Side Guide Horizontal Adjustment	31	
	44	Right Lower Closing Side Guide Horizontal Adjustment	27	
	45	Traveling Compression (Barrel Cam) Phase Adjustment	20	
	46	Right Disharge Conveyor Upstream Adjustment	35	
	47	Right Disharge Conveyor Downstream Adjustment	55	
	48	Left Disharge Conveyor Downstream Adjustment	42	
	49	Left Disharge Conveyor Upstream Adjustment	52	
	50	Overhead Conveyor Phase Adjustment	86	
	51	Left Closing Side Guide Vertical Adjustment	29	
	52	Left Closing Side Guide Vertical Adjustment	29	
	53	Left Closing Side Guide Vertical Adjustment	27	
	54	Right Upper Closing Side Guide Horizontal Adjustment	55	
	55	Right Upper Closing Side Guide Horizontal Adjustment	55	
	56	Right Upper Closing Side Guide Horizontal Adjustment	56	
	57	Right Lower Closing Side Guide Horizontal Adjustment	37	
	58	Right Lower Closing Side Guide Horizontal Adjustment	33	
	59	Right Lower Closing Side Guide Horizontal Adjustment	30	
	60	Traveling Compression In / Out Adjustment	00142	
	61	Flap Plow Angle Adjustment	?	
	62	Left Transfer Chain In / Out Adjustment	00426.5	
	63	Left Transfer Chain Up / Down Adjustment	00747	
	64	Main Product Conveyor Right Side Guide Change Out	EMU 1x	
	65	Carton Feeder Up / Down Adjustment	00271	
	66	Left Transfer Chain Phase Adjustment	86	
	67	Left Double Infeed Side Guide	21	
	68	Left Double Infeed Side Guide	21	
	69	Left Double Infeed Side Guide	21	
	70	Left Double Infeed Side Guide	21	
	71	Left Double Infeed Side Guide	21	
	72	Left Double Infeed Side Guide	22	
	73	Left Double Infeed Side Guide	22	
	74	Left Index Transition Plate In / Out	28	
	75	Left Index Transition Plate Up / Down	42	
	76	Left Indexing Screw In / Out	00420	
	77	Left Indexing Screw Up / Down	00400	
	78	Left Indexing Screw Changeout	M-67476-1A	
	79	Left Offset Guide Changeout	Round	
	80	Infeed Side Guide	28	
	81	Infeed Side Guide	22	

EMU 2X

1x	Item	Description	Factory	Field
	1	Infeed Side Guide	37	
	2	Infeed Side Guide	29	
	3	Overhead Up / Down Adjustment	45	
	4	Overhead Up / Down Adjustment	45	
	5	Right Offset Guide Changeout	Round	
	6	Right Indexing Screw Changeout	M-67476-1	
	7	Right Indexing Screw Up / Down	00400	
	8	Right Indexing Screw In / Out	00412	
	9	Overhead Guide Rail Vertical Adjustment	50	
	10	Overhead Guide Rail Vertical Adjustment	37	
	11	Right Index Transition Plate Up / Down	30	
	12	Right Index Transition Plate In / Out	30	
	13	Right Double Infeed Side Guide	30	
	14	Right Double Infeed Side Guide	30	
	15	Right Double Infeed Side Guide	31	
	16	Right Double Infeed Side Guide	31	
	17	Right Double Infeed Side Guide	31	
	18	Right Double Infeed Side Guide	31	
	19	Right Double Infeed Side Guide	31	
	20	Magazine In / Out Adjustment	00968	
	21	Magazine Side Guide In / Out	01051	
	22	Magazine Up / Down Adjustment	00890	
	23	Magazine Face Plate Change Out	2 Circle	
	24	Right Main Product Conveyor Side Guide Change Out	EMU 2x	
	25	Right Transfer Chain Phase Adjustment	92	
	26	Feeder Vacuum Cup Position	No Change	
	27	Right Transfer Chain Up / Down Adjustment	00994	
	28	Right Transfer Chain In / Out Adjustment	00797	
	29	Flap Plow Angle Adjustment	?	
	30	Overhead Conveyor Carrier Lug Change Out	EMU 2x	
	31	Overhead Conveyor Pusher Lug Change Out	EMU 2x	
	32	Traveling Compression (Barrel Cam) In / Out Adjustment	00276	
	33	Glue Gun Vertical Adjustment	18	
	34	Squaring Chain Phase Adjustment	85	
	35	Closing Plow / Tongue Adjustment	EMU 2x	
	36	Right Closing Side Guide Vertical Adjustment	35	
	37	Right Closing Side Guide Vertical Adjustment	33	
	38	Right Closing Side Guide Vertical Adjustment	33	
	39	Right Upper Closing Side Guide Horizontal Adjustment	34	
	40	Right Upper Closing Side Guide Horizontal Adjustment	34	
	41	Right Upper Closing Side Guide Horizontal Adjustment	34	
	42	Right Lower Closing Side Guide Horizontal Adjustment	44	

1x	Item	Description	Factory	Field
	43	Right Lower Closing Side Guide Horizontal Adjustment	39	
	44	Right Lower Closing Side Guide Horizontal Adjustment	38	
	45	Traveling Compression (Barrel Cam) Phase Adjustment	28	
	46	Right Disharge Conveyor Upstream Adjustment	35	
	47	Right Disharge Conveyor Downstream Adjustment	53	
	48	Left Disharge Conveyor Downstream Adjustment	42	
	49	Left Disharge Conveyor Upstream Adjustment	53	
	50	Overhead Conveyor Phase Adjustment	80	
	51	Left Closing Side Guide Vertical Adjustment	35	
	52	Left Closing Side Guide Vertical Adjustment	35	
	53	Left Closing Side Guide Vertical Adjustment	35	
	54	Right Upper Closing Side Guide Horizontal Adjustment	32	
	55	Right Upper Closing Side Guide Horizontal Adjustment	34	
	56	Right Upper Closing Side Guide Horizontal Adjustment	39	
	57	Right Lower Closing Side Guide Horizontal Adjustment	38	
	58	Right Lower Closing Side Guide Horizontal Adjustment	38	
	59	Right Lower Closing Side Guide Horizontal Adjustment	30	
	60	Traveling Compression In / Out Adjustment	00128	
	61	Flap Plow Angle Adjustment	?	
	62	Left Transfer Chain In / Out Adjustment	00704	
	63	Left Transfer Chain Up / Down Adjustment	00874	
	64	Main Product Conveyor Right Side Guide Change Out	EMU 2x	
	65	Carton Feeder Up / Down Adjustment	00544	
	66	Left Transfer Chain Phase Adjustment	86	
	67	Left Double Infeed Side Guide	28	
	68	Left Double Infeed Side Guide	25	
	69	Left Double Infeed Side Guide	20	
	70	Left Double Infeed Side Guide	21	
	71	Left Double Infeed Side Guide	21	
	72	Left Double Infeed Side Guide	21	
	73	Left Double Infeed Side Guide	21	
	74	Left Index Transition Plate In / Out	28	
	75	Left Index Transition Plate Up / Down	41	
	76	Left Indexing Screw In / Out	00420	
	77	Left Indexing Screw Up / Down	00400	
	78	Left Indexing Screw Changeout	M-67476-1A	
	79	Left Offset Guide Changeout	Round	
	80	Infeed Side Guide	28	
	81	Infeed Side Guide	22	

FCW 1X

2x	Item	Description	Factory	Field
	1	Infeed Side Guide	42	
	2	Infeed Side Guide	42	
	3	Overhead Up / Down Adjustment	40	
	4	Overhead Up / Down Adjustment	35	
	5	Right Offset Guide Changeout	Square	
	6	Right Indexing Screw Changeout	M-67476-2	
	7	Right Indexing Screw Up / Down	00400	
	8	Right Indexing Screw In / Out	00513	
	9	Overhead Guide Rail Vertical Adjustment	26	
	10	Overhead Guide Rail Vertical Adjustment	25	
	11	Right Index Transition Plate Up / Down	21	
	12	Right Index Transition Plate In / Out	52	
	13	Right Double Infeed Side Guide	48	
	14	Right Double Infeed Side Guide	48	
	15	Right Double Infeed Side Guide	45	
	16	Right Double Infeed Side Guide	40	
	17	Right Double Infeed Side Guide	40	
	18	Right Double Infeed Side Guide	40	
	19	Right Double Infeed Side Guide	40	
	20	Magazine In / Out Adjustment	00971	
	21	Magazine Side Guide In / Out	00932	
	22	Magazine Up / Down Adjustment	00588	
	23	Magazine Face Plate Change Out	Square 1	
	24	Right Main Product Conveyor Side Guide Change Out	FCW-1X	
	25	Right Transfer Chain Phase Adjustment	104	
	26	Feeder Vacuum Cup Position	No Change	
	27	Right Transfer Chain Up / Down Adjustment	00691	
	28	Right Transfer Chain In / Out Adjustment	00564	
	29	Flap Plow Angle Adjustment	?	
	30	Overhead Conveyor Carrier Lug Change Out	FCW-1X	
	31	Overhead Conveyor Pusher Lug Change Out	FCW-1X	
	32	Traveling Compression (Barrel Cam) In / Out Adjustment	00337	
	33	Glue Gun Vertical Adjustment	55	
	34	Squaring Chain Phase Adjustment	75	
	35	Closing Plow / Tongue Adjustment	FCW-1X	
	36	Right Closing Side Guide Vertical Adjustment	22	
	37	Right Closing Side Guide Vertical Adjustment	22	
	38	Right Closing Side Guide Vertical Adjustment	22	
	39	Right Upper Closing Side Guide Horizontal Adjustment	55	
	40	Right Upper Closing Side Guide Horizontal Adjustment	55	
	41	Right Upper Closing Side Guide Horizontal Adjustment	55	
	42	Right Lower Closing Side Guide Horizontal Adjustment	50	

2x	Item	Description	Factory	Field
	43	Right Lower Closing Side Guide Horizontal Adjustment	50	
	44	Right Lower Closing Side Guide Horizontal Adjustment	50	
	45	Traveling Compression (Barrel Cam) Phase Adjustment	38	
	46	Right Disharge Conveyor Upstream Adjustment	50	
	47	Right Disharge Conveyor Downstream Adjustment	55	
	48	Left Disharge Conveyor Downstream Adjustment	58	
	49	Left Disharge Conveyor Upstream Adjustment	55	
	50	Overhead Conveyor Phase Adjustment	70	
	51	Left Closing Side Guide Vertical Adjustment	22	
	52	Left Closing Side Guide Vertical Adjustment	22	
	53	Left Closing Side Guide Vertical Adjustment	22	
	54	Right Upper Closing Side Guide Horizontal Adjustment	55	
	55	Right Upper Closing Side Guide Horizontal Adjustment	55	
	56	Right Upper Closing Side Guide Horizontal Adjustment	55	
	57	Right Lower Closing Side Guide Horizontal Adjustment	50	
	58	Right Lower Closing Side Guide Horizontal Adjustment	50	
	59	Right Lower Closing Side Guide Horizontal Adjustment	50	
	60	Traveling Compression In / Out Adjustment	00190	
	61	Flap Plow Angle Adjustment	?	
	62	Left Transfer Chain In / Out Adjustment	00643	
	63	Left Transfer Chain Up / Down Adjustment	00691	
	64	Main Product Conveyor Right Side Guide Change Out	FCW-1X	
	65	Carton Feeder Up / Down Adjustment	00286	
	66	Left Transfer Chain Phase Adjustment	78	
	67	Left Double Infeed Side Guide	41	
	68	Left Double Infeed Side Guide	41	
	69	Left Double Infeed Side Guide	41	
	70	Left Double Infeed Side Guide	42	
	71	Left Double Infeed Side Guide	42	
	72	Left Double Infeed Side Guide	35	
	73	Left Double Infeed Side Guide	38	
	74	Left Index Transition Plate In / Out	35	
	75	Left Index Transition Plate Up / Down	44	
	76	Left Indexing Screw In / Out	00482	
	77	Left Indexing Screw Up / Down	00400	
	78	Left Indexing Screw Changeout	M-67476-2A	
	79	Left Offset Guide Changeout	Square	
	80	Infeed Side Guide	43	
	81	Infeed Side Guide	43	

FCW 2X

2x	Item	Description	Factory	Field
	1	Infeed Side Guide	41	
	2	Infeed Side Guide	43	
	3	Overhead Up / Down Adjustment	39	
	4	Overhead Up / Down Adjustment	33	
	5	Right Offset Guide Changeout	Square	
	6	Right Indexing Screw Changeout	M-67476-2	
	7	Right Indexing Screw Up / Down	00400	
	8	Right Indexing Screw In / Out	00513	
	9	Overhead Guide Rail Vertical Adjustment	34	
	10	Overhead Guide Rail Vertical Adjustment	32	
	11	Right Index Transition Plate Up / Down	22	
	12	Right Index Transition Plate In / Out	49	
	13	Right Double Infeed Side Guide	47	
	14	Right Double Infeed Side Guide	46	
	15	Right Double Infeed Side Guide	43	
	16	Right Double Infeed Side Guide	41	
	17	Right Double Infeed Side Guide	41	
	18	Right Double Infeed Side Guide	41	
	19	Right Double Infeed Side Guide	41	
	20	Magazine In / Out Adjustment	00981	
	21	Magazine Side Guide In / Out	01122	
	22	Magazine Up / Down Adjustment	00812	
	23	Magazine Face Plate Change Out	Square 2X	
	24	Right Main Product Conveyor Side Guide Change Out	FCW-2X	
	25	Right Transfer Chain Phase Adjustment	110	
	26	Feeder Vacuum Cup Position	No Change	
	27	Right Transfer Chain Up / Down Adjustment	00904	
	28	Right Transfer Chain In / Out Adjustment	00765	
	29	Flap Plow Angle Adjustment	?	
	30	Overhead Conveyor Carrier Lug Change Out	FCW-2X	
	31	Overhead Conveyor Pusher Lug Change Out	FCW-2X	
	32	Traveling Compression (Barrel Cam) In / Out Adjustment	00343	
	33	Glue Gun Vertical Adjustment	55	
	34	Squaring Chain Phase Adjustment	62	
	35	Closing Plow / Tongue Adjustment	FCW-2X	
	36	Right Closing Side Guide Vertical Adjustment	57	
	37	Right Closing Side Guide Vertical Adjustment	56	
	38	Right Closing Side Guide Vertical Adjustment	58	
	39	Right Upper Closing Side Guide Horizontal Adjustment	55	
	40	Right Upper Closing Side Guide Horizontal Adjustment	55	
	41	Right Upper Closing Side Guide Horizontal Adjustment	55	
	42	Right Lower Closing Side Guide Horizontal Adjustment	58	

2x	Item	Description	Factory	Field
	43	Right Lower Closing Side Guide Horizontal Adjustment	58	
	44	Right Lower Closing Side Guide Horizontal Adjustment	58	
	45	Traveling Compression (Barrel Cam) Phase Adjustment	45	
	46	Right Disharge Conveyor Upstream Adjustment	52	
	47	Right Disharge Conveyor Downstream Adjustment	53	
	48	Left Disharge Conveyor Downstream Adjustment	45	
	49	Left Disharge Conveyor Upstream Adjustment	55	
	50	Overhead Conveyor Phase Adjustment	73	
	51	Left Closing Side Guide Vertical Adjustment	59	
	52	Left Closing Side Guide Vertical Adjustment	56	
	53	Left Closing Side Guide Vertical Adjustment	53	
	54	Right Upper Closing Side Guide Horizontal Adjustment	44	
	55	Right Upper Closing Side Guide Horizontal Adjustment	46	
	56	Right Upper Closing Side Guide Horizontal Adjustment	48	
	57	Right Lower Closing Side Guide Horizontal Adjustment	55	
	58	Right Lower Closing Side Guide Horizontal Adjustment	56	
	59	Right Lower Closing Side Guide Horizontal Adjustment	57	
	60	Traveling Compression In / Out Adjustment	00188	
	61	Flap Plow Angle Adjustment	?	
	62	Left Transfer Chain In / Out Adjustment	00842	
	63	Left Transfer Chain Up / Down Adjustment	00895	
	64	Main Product Conveyor Right Side Guide Change Out	FCW-2X	
	65	Carton Feeder Up / Down Adjustment	00461	
	66	Left Transfer Chain Phase Adjustment	86	
	67	Left Double Infeed Side Guide	42	
	68	Left Double Infeed Side Guide	42	
	69	Left Double Infeed Side Guide	42	
	70	Left Double Infeed Side Guide	42	
	71	Left Double Infeed Side Guide	39	
	72	Left Double Infeed Side Guide	33	
	73	Left Double Infeed Side Guide	38	
	74	Left Index Transition Plate In / Out	41	
	75	Left Index Transition Plate Up / Down	18	
	76	Left Indexing Screw In / Out	00482	
	77	Left Indexing Screw Up / Down	00400	
	78	Left Indexing Screw Changeout	M-67476-2A	
	79	Left Offset Guide Changeout	Square	
	80	Infeed Side Guide	42	
	81	Infeed Side Guide	43	

Machine Factory Settings

Glue System Settings

Hot Melt

	Factory	Field
Manufacturer		
Product Number		

Hot Melt System Manufacturer Nordson

Model #: _____ Serial #: _____

Applicator Settings

	Factory	Field
Pump		
Hose #1	350°F	
Hose #2		
Hose #3		
Hose #4		

	Factory	Field
Tank	350°F	
Gun #1	350°F	
Gun #2		
Gun #3		
Gun #4		

HMI Screen Settings

Axis 1: Left Index Screw

	Factory	Field
Short Term Positive Limit	150.0	
Short Term Negative Limit	-150.0	
Long Term Positive Limit	90.0	
Long Term Negative Limit	-90.0	
Offset	0.00	
Input Method	Symmetric	

Axis 2: Right Index Screw

	Factory	Field
Short Term Positive Limit	150.0	
Short Term Negative Limit	-150.0	
Long Term Positive Limit	90.0	
Long Term Negative Limit	-90.0	
Offset	0.00	
Input Method	Symmetric	

VFD 1: Main Drive

	Factory	Field
Max Speed	8000	
Min Speed	1100	
Speed Gain	52.12	
Speed Offset	0	

VFD 2: Infeed Conveyor

	Factory	Field
Max Speed	8000	
Min Speed	1500	
Speed Gain	54.40	
Speed Offset	0	

VFD 3: Overhead Lift

	Factory	Field
Max Speed	6000	
Min Speed	500	
Speed Gain	1.00	
Speed Offset	0	

VFD 4: Magazine Advance

	Factory	Field
Max Speed	6000	
Min Speed	500	
Speed Gain	60.00	
Speed Offset	0	

VFD 5: Side Tucker

	Factory	Field
Max Speed	8000	
Min Speed	1500	
Speed Gain	15.00	
Speed Offset	0	

VFD 6: Discharge Conveyor

	Factory	Field
Max Speed	8000	
Min Speed	1500	
Speed Gain	40.00	
Speed Offset	0	

Position Based Controls

		Factory		Field	
Ch	Description	On	Off	On	Off
0	Not Used	0.00	0.00		
1	Product Detect / Vacuum Control	10.00	145.00		
2	Pick Verify / Load Gate	359.00	60.00		
3	Cycle Stop	310.00	350.00		
4	Indexer Start	70.00	170.00		
5	Not Used	210.00	220.00		
6	Robot Pick Window	175.00	225.00		
7	Overhead Change Stop	175.00	225.00		
8	Zero Stop	352.00	75.00		
9	Not Used	0.00	0.00		

Machine Parameters

	Factory	Field
Low Speed ON	1500	
Mid Speed ON	750	
Mid Speed OFF	1500	
High Speed ON	500	
High Speed OFF	1500	
Low Magazine Warning	100	
Low Magazine Shutdown	200	
Downstream Timer ON	500	

	Factory	Field
Downstream Timer OFF	1500	
High Speed Gain	1500	
Low Glue Warning	10000	
Low Glue Shutdown	1000	
Pick Confirm Eye Fault Timer	2588	
Glue Eye Fault Timer	1.060	
Pick Confirm Eye Fault Timer	3.125	

Glue Melter Setup

	Factory	Field
Stand-by Delta T	125	
Maintenance Interval	500	
Hours Til Next Service	372	
Under Temp Delta T	51	
Over Temp Delta T	42	

Glue Pressure Setup

	Factory	Field
High Speed Set Point	100	
Low Speed Set Point	50	
High Pressure Set Point	40	
Low Pressure Set Point	20	
Manual Pressure	28	

Machine Speed

	Factory	Field
Manual Speed	11.00	
Idle Speed Setting	0.00	
Jog Speed Setting	7.11	
Low Speed Setting	0.250	
Mid Speed Setting	7.04	

Robot Setup

	Factory	Field
Pick X Axis Position	-3	
Pick X Axis Position	-3	
Pick Y Axis Position	0	
Pick Y Axis Position	0	
Pick Z Axis Position	0	
Pick Z Axis Position	0	

	Factory	Field
Pick Approach Position	0	
Pick Approach Position	0	
Pick Retract Position	0	
Pick Retract Position	0	
Pick Rotation Position	0	
Pick Rotation Position	0	
Place Angle Position	0	
Place Retract Angle Position	0	

Overhead Adjustment

	Factory	Field
Upper Soft Limit	11.00	
Lower Soft Limit	0.00	
Out of Position Limit	7.11	
Position Set Point	0.250	
VFD Speed	7.04	

Magazine Advance Controls

	Factory	Field
Magazine Advance Start Delay	100	
Magazine Advance Base Speed	15	
Magazine Adv. High Speed Gain	1.750	

Blow Off

	Factory	Field
Position	193.3	
Enabled	Yes	

Recipe Settings

Recipe: EXPAD 1X

Recipe Glue

		Factory		Field	
Stich	Gun	On	Off	On	Off
1	Glue Gun	0.50	2.25		
2	Glue Gun	0.00	0.00		

Basic Setup

			Factory		Field
Initial Speed			100		
Glue Offset			170.00		
Glue Enable	ON	OFF	70	210	
Overhead Position Setpoint			7.12		
Screw Indexer Start Position			70.0		
Robot Recipe Number			0		
Product Count			1		

Robot Settings 1

	Factory	Field
Pick X Axis Position	0	
Pick Y Axis Position	0	
Pick Z Axis Position	0	
Pick Approach Position	0	
Pick Retract Position	0	
Pick Rotation Position	0	
Place Angle Position	0	

	Factory	Field
Place X Axis Position	0	
Place Y Axis Position	0	
Place Z Axis Position	0	
Place Approach Angle	0	
Place Retract Position	0	
Place Rotation Position	0	
Place Retract Angle Position	0	

Recipe: EXPAD 2X

Recipe Glue

		Factory		Field	
Stich	Gun	On	Off	On	Off
1	Glue Gun	0.50	2.25		
2	Glue Gun	0.00	0.00		

Basic Setup

			Factory		Field
Initial Speed			100		
Glue Offset			170.00		
Glue Enable	ON	OFF	70	210	
Overhead Position Setpoint			7.83		
Screw Indexer Start Position			70.0		
Robot Recipe Number			1		
Product Count			2		

Robot Settings 1

	Factory	Field
Pick X Axis Position	-35	
Pick Y Axis Position	-10	
Pick Z Axis Position	42	
Pick Approach Position	40	
Pick Retract Position	0	
Pick Rotation Position	0	
Place Angle Position	0	

	Factory	Field
Place X Axis Position	-15	
Place Y Axis Position	3	
Place Z Axis Position	-10	
Place Approach Angle	0	
Place Retract Position	0	
Place Rotation Position	0	
Place Retract Angle Position	0	

Recipe: FCW 1X

Recipe Glue

		Factory		Field	
Stich	Gun	On	Off	On	Off
1	Glue Gun	0.50	2.25		
2	Glue Gun	0.00	0.00		

Basic Setup

			Factory		Field
Initial Speed			80		
Glue Offset			140.00		
Glue Enable	ON	OFF	70	210	
Overhead Position Setpoint			7.01		
Screw Indexer Start Position			24.0		
Robot Recipe Number			0		
Product Count			1		

Robot Settings 1

	Factory	Field
Pick X Axis Position	-15	
Pick Y Axis Position	0	
Pick Z Axis Position	52	
Pick Approach Position	40	
Pick Retract Position	40	
Pick Rotation Position	0	
Place Angle Position	0	

	Factory	Field
Place X Axis Position	0	
Place Y Axis Position	0	
Place Z Axis Position	-2	
Place Approach Angle	0	
Place Retract Position	0	
Place Rotation Position	0	
Place Retract Angle Position	0	

Recipe: FCW 2X

Recipe Glue

		Factory		Field	
Stich	Gun	On	Off	On	Off
1	Glue Gun	0.30	2.30		
2	Glue Gun	0.00	0.00		

Basic Setup

			Factory		Field
Initial Speed			100		
Glue Offset			130.00		
Glue Enable	ON	OFF	70	210	
Overhead Position Setpoint			6.04		
Screw Indexer Start Position			24.0		
Robot Recipe Number			2		
Product Count			2		

Robot Settings 1

	Factory	Field
Pick X Axis Position	-8	
Pick Y Axis Position	0	
Pick Z Axis Position	0	
Pick Approach Position	0	
Pick Retract Position	0	
Pick Rotation Position	0	
Place Angle Position	0	

	Factory	Field
Place X Axis Position	-7	
Place Y Axis Position	0	
Place Z Axis Position	52	
Place Approach Angle	40	
Place Retract Position	40	
Place Rotation Position	0	
Place Retract Angle Position	0	

Recipe: EMU 1X

Recipe Glue

		Factory		Field	
Stich	Gun	On	Off	On	Off
1	Glue Gun	0.25	2.19		
2	Glue Gun	0.00	0.00		

Basic Setup

			Factory		Field
Initial Speed			66		
Glue Offset			140.00		
Glue Enable	ON	OFF	70	210	
Overhead Position Setpoint			7.11		
Screw Indexer Start Position			70.0		
Robot Recipe Number			0		
Product Count			1		

Robot Settings 1

	Factory	Field
Pick X Axis Position	-15	
Pick Y Axis Position	0	
Pick Z Axis Position	52	
Pick Approach Position	40	
Pick Retract Position	40	
Pick Rotation Position	0	
Place Angle Position	0	

	Factory	Field
Place X Axis Position	0	
Place Y Axis Position	0	
Place Z Axis Position	-2	
Place Approach Angle	0	
Place Retract Position	0	
Place Rotation Position	0	
Place Retract Angle Position	0	

Recipe: EMU 2X

Recipe Glue

		Factory		Field	
Stich	Gun	On	Off	On	Off
1	Glue Gun	0.19	2.19		
2	Glue Gun	0.00	0.00		

Basic Setup

			Factory		Field
Initial Speed			100		
Glue Offset			66		
Glue Enable	ON	OFF	70	210	
Overhead Position Setpoint			6.90		
Screw Indexer Start Position			70.0		
Robot Recipe Number			3		
Product Count			2		

Robot Settings 1

	Factory	Field
Pick X Axis Position	-3	
Pick Y Axis Position	-3	
Pick Z Axis Position	0	
Pick Approach Position	0	
Pick Retract Position	0	
Pick Rotation Position	0	
Place Angle Position	0	

	Factory	Field
Place X Axis Position	0	
Place Y Axis Position	0	
Place Z Axis Position	0	
Place Approach Angle	0	
Place Retract Position	0	
Place Rotation Position	0	
Place Retract Angle Position	0	

Machine Layout

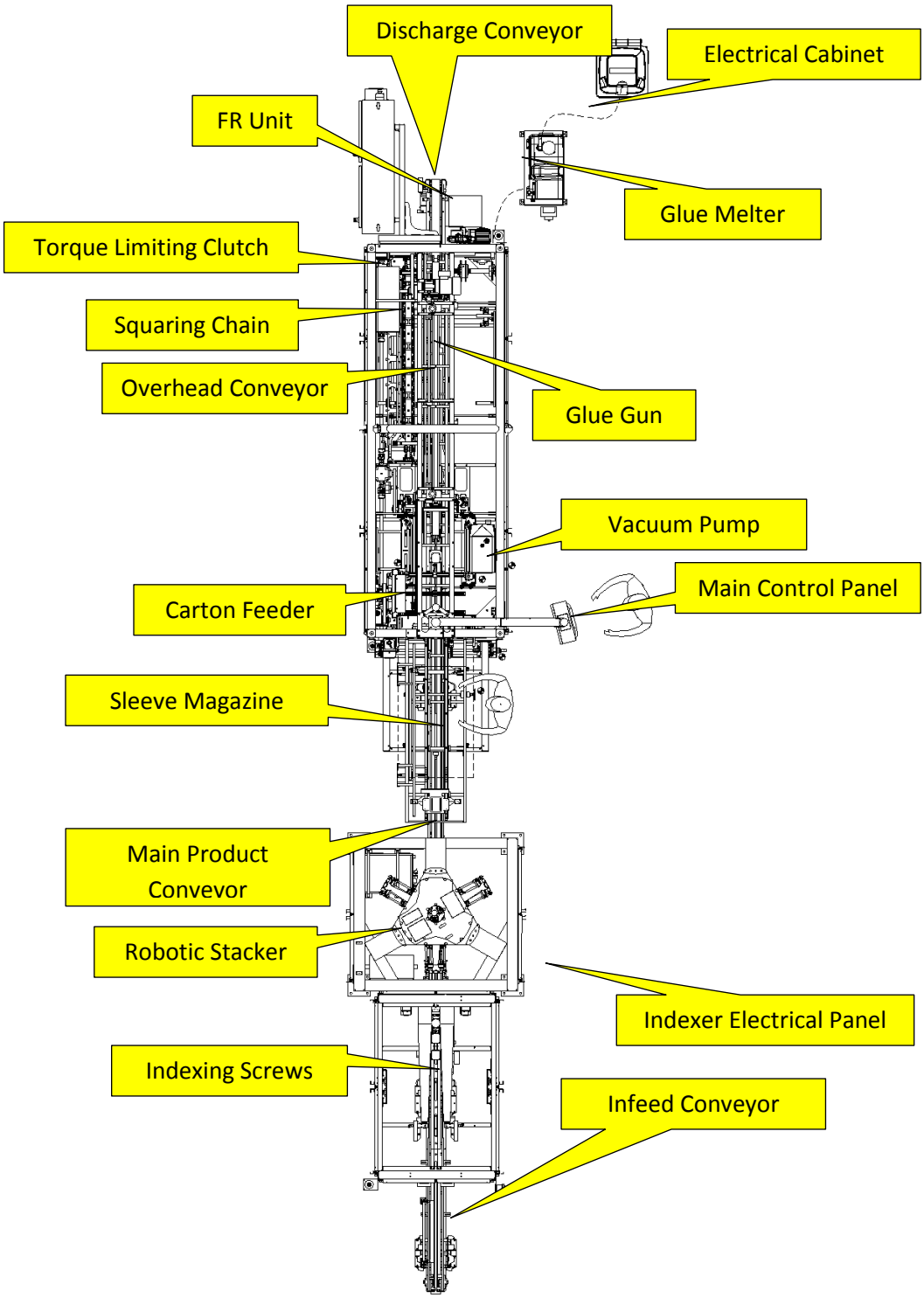

Machine Sections

Infeed / Indexing Section

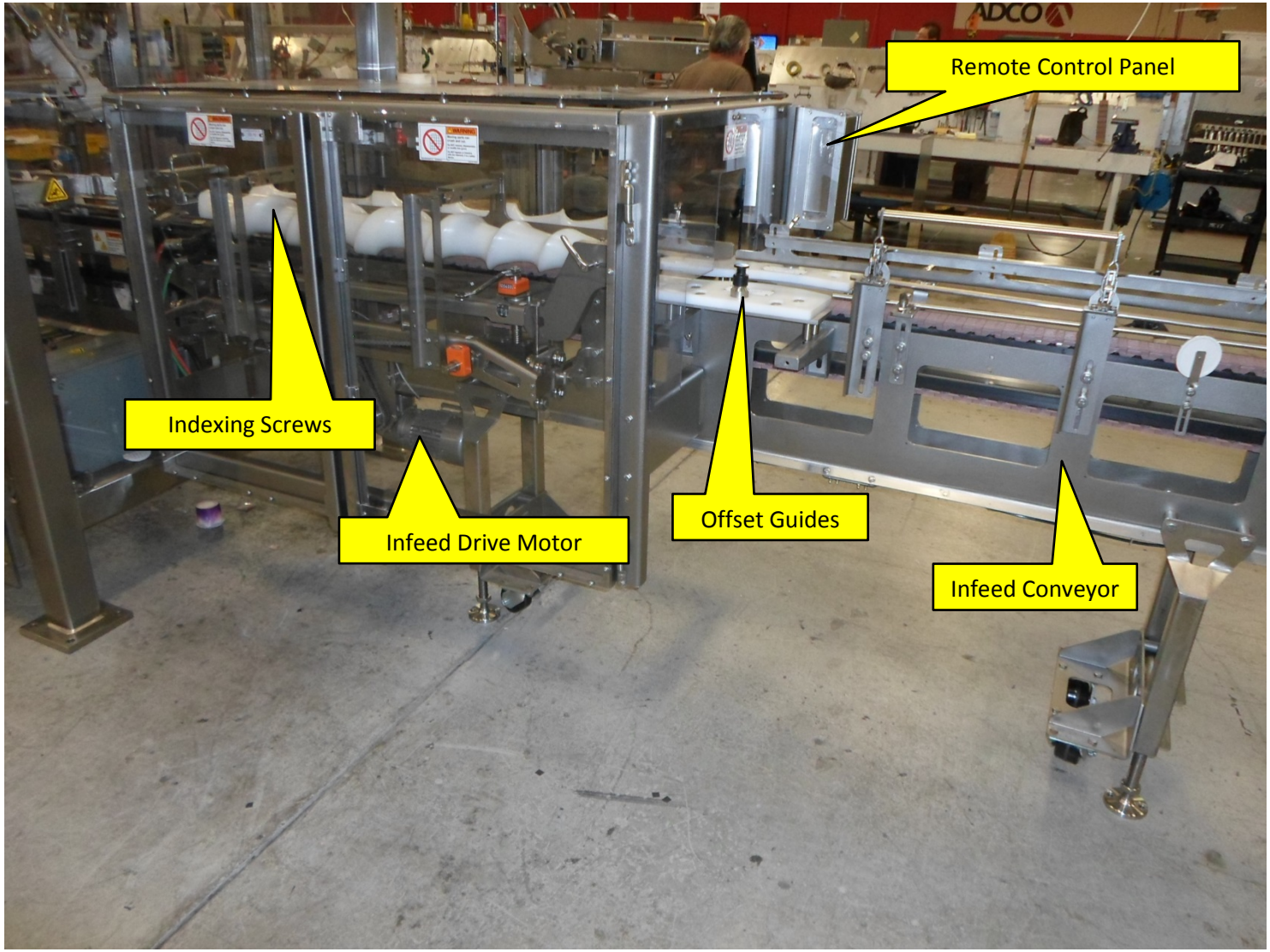

Stacking Section

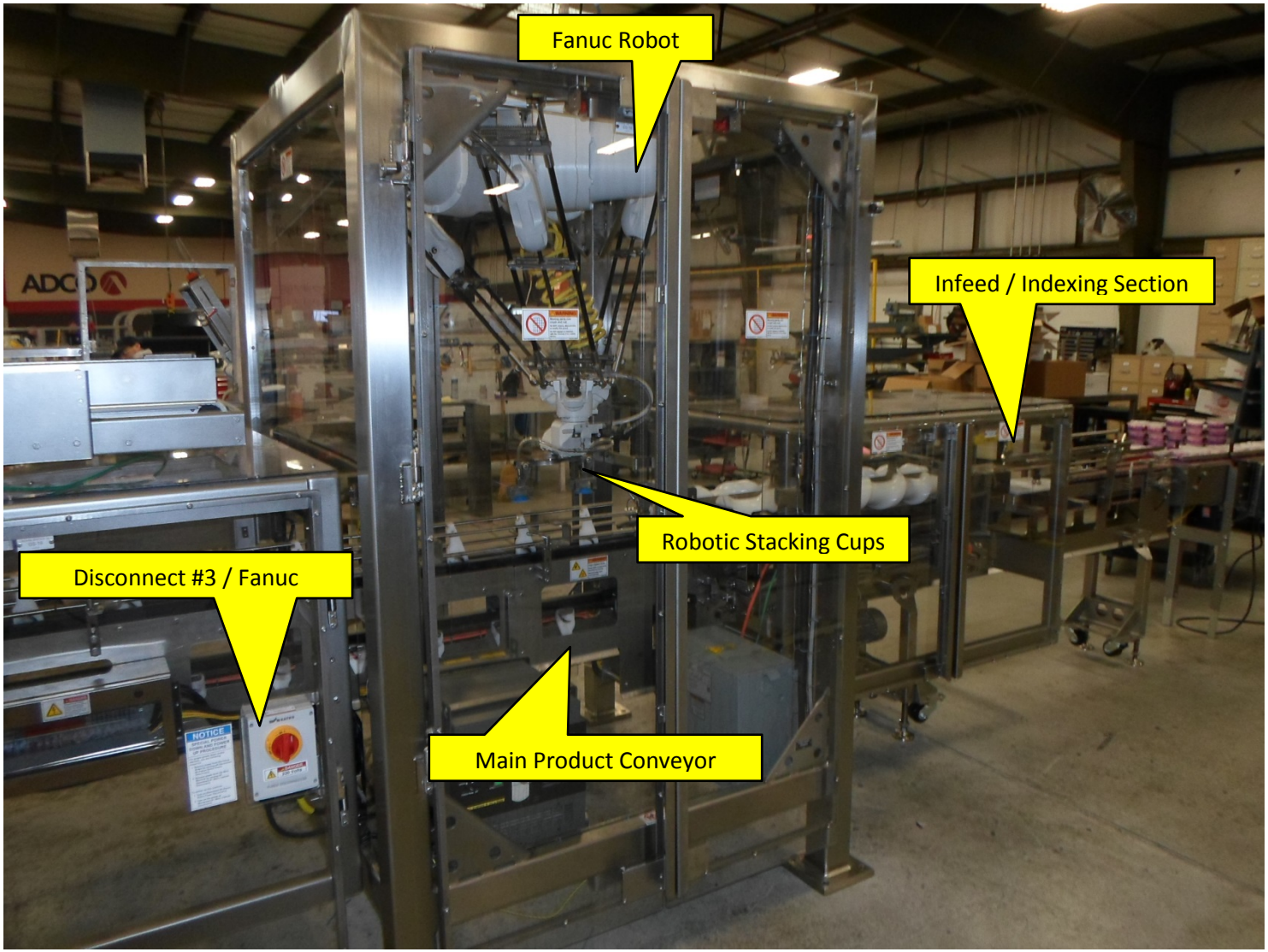

Picking Section / Overhead Conveyor

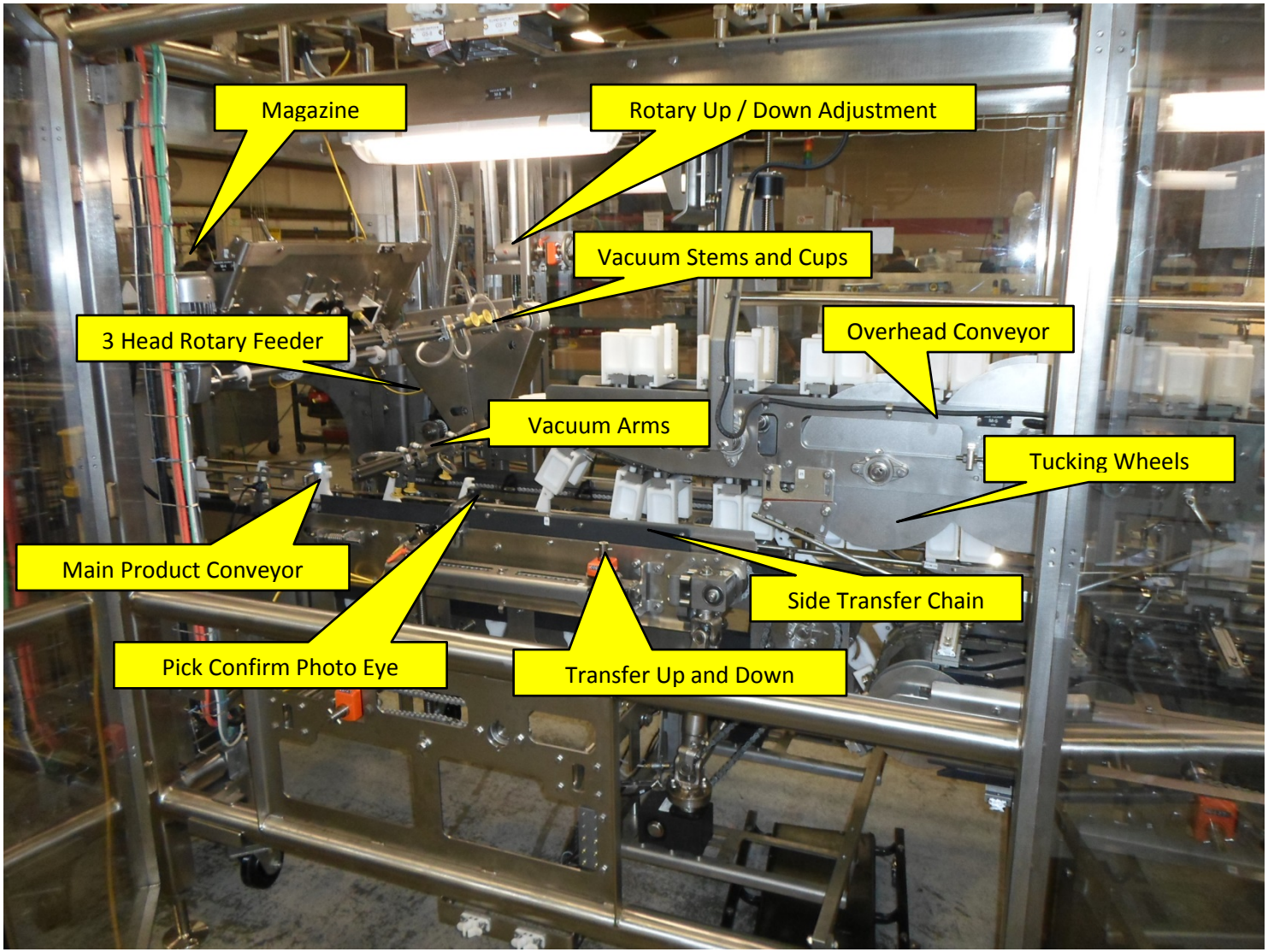

Side Compression / Overhead Conveyor Section

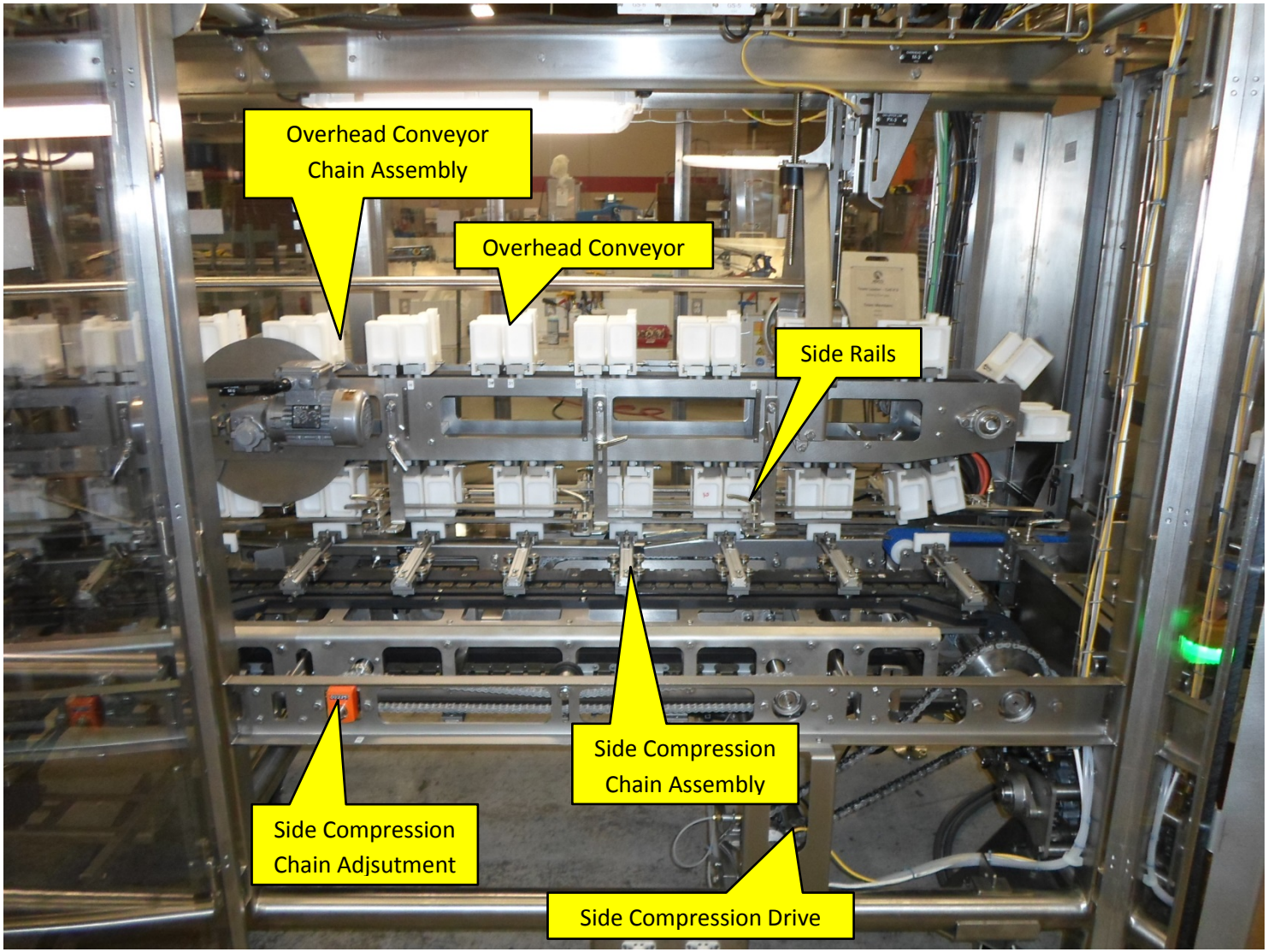

Changeover Sequence

The Changeover Sequence is provided to help with changing over the machine to the provided sizes in an orderly sequence. It is arranged to help make the changeover as short as possible. The sequence does not necessarily have to be followed in order, and all adjustments may not be necessary.

Order of Changeover

1. Infeed Side Guide
2. Infeed Side Guide
3. Overhead Up / Down Adjustment
4. Overhead Up / Down Adjustment
5. Right Offset Guide Changeout
6. Right Indexing Screw Changeout
7. Right Indexing Screw Up / Down
8. Right Indexing Screw In / Out
9. Overhead Guide Rail Vertical Adjustment
10. Overhead Guide Rail Vertical Adjustment
11. Right Index Transition Plate Up / Down
12. Right Index Transition Plate In / Out
13. Right Double Infeed Side Guide
14. Right Double Infeed Side Guide
15. Right Double Infeed Side Guide
16. Right Double Infeed Side Guide
17. Right Double Infeed Side Guide
18. Right Double Infeed Side Guide
19. Right Double Infeed Side Guide
20. Magazine In / Out Adjustment
21. Magazine Side Guide In / Out
22. Magazine Up / Down Adjustment
23. Magazine Face Plate Change Out
24. Main Product Convr. Rt Side Guide Change Out
25. Right Transfer Chain Phase Adjustment
26. Feeder Vacuum Cup Position
27. Right Transfer Chain Up / Down Adjustment
28. Right Transfer Chain In / Out Adjustment
29. Flap Plow Angle Adjustment
30. Overhead Conveyor Carrier Lug Change Out
31. Overhead Conveyor Pusher Lug Change Out
32. Traveling Compression (Barrel Cam) In / Out Adjustment
33. Glue Gun Vertical Adjustment
34. Squaring Chain Phase Adjustment
35. Closing Plow / Tongue Adjustment
36. Right Closing Side Guide Vertical Adjustment
37. Right Closing Side Guide Vertical Adjustment
38. Right Closing Side Guide Vertical Adjustment
39. Rt Upper Closing Side Guide Horiz. Adjustment
40. Rt Upper Closing Side Guide Horiz. Adjustment
41. Rt Upper Closing Side Guide Horiz. Adjustment
42. Rt Lower Closing Side Guide Horiz. Adjustment
43. Rt Lower Closing Side Guide Horiz. Adjustment
44. Rt Lower Closing Side Guide Horiz. Adjustment
45. Traveling Compression (Barrel Cam) Phase Adjustment
46. Rt Discharge Conveyor Upstream Adjustment
47. Rt Discharge Conveyor Downstream Adjustment
48. Lt Discharge Conveyor Downstream Adjustment
49. Lt Discharge Conveyor Upstream Adjustment
50. Overhead Conveyor Phase Adjustment
51. Left Closing Side Guide Vertical Adjustment
52. Left Closing Side Guide Vertical Adjustment
53. Left Closing Side Guide Vertical Adjustment
54. Lt Upper Closing Side Guide Horiz. Adjustment
55. Lt Upper Closing Side Guide Horiz. Adjustment
56. Lt Upper Closing Side Guide Horiz. Adjustment
57. Lt Lower Closing Side Guide Horiz. Adjustment
58. Lt Lower Closing Side Guide Horiz. Adjustment
59. Lt Lower Closing Side Guide Horiz. Adjustment
60. Traveling Compression In / Out Adjustment
61. Flap Plow Angle Adjustment
62. Left Transfer Chain In / Out Adjustment
63. Left Transfer Chain Up / Down Adjustment
64. Main Product Convr. Lt Side Guide Change Out
65. Carton Feeder Up / Down Adjustment
66. Left Transfer Chain Phase Adjustment
67. Left Double Infeed Side Guide
68. Left Double Infeed Side Guide
69. Left Double Infeed Side Guide
70. Left Double Infeed Side Guide

71. Left Double Infeed Side Guide
72. Left Double Infeed Side Guide
73. Left Double Infeed Side Guide
74. Left Index Transition Plate In / Out
75. Left Index Transition Plate Up / Down
76. Left Indexing Screw In / Out
77. Left Indexing Screw Up / Down
78. Left Indexing Screw Changeout
79. Left Offset Guide Changeout
80. Infeed Side Guide
81. Infeed Side Guide

Adjustment Instructions

NOTE: The Settings for this machine are recorded on the "Machine Adjustment Setting" Sheets, which also record the changeover procedure. The Individual adjustment instructions are identified with the type of adjustments made on the "Machine Adjustment Setting" Sheets.

Adjustment 1: Scale and Pointer Adjustments

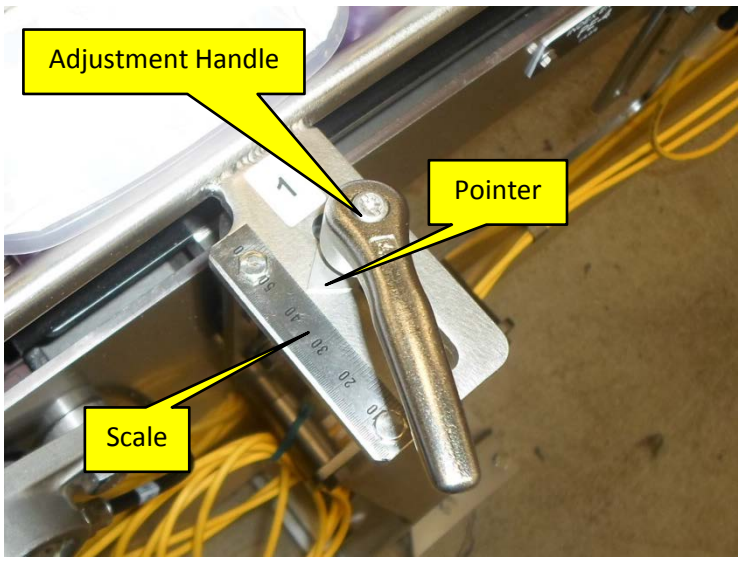

1.1 Loosen the Adjustment Handle.

1.2 Adjust the side guide to where the Pointer is at the setting indicated on the Machine Adjustment Settings Sheets.

1.3 Tighten the Adjustment Handle.

Adjustment 2: Offset Guide Change Out

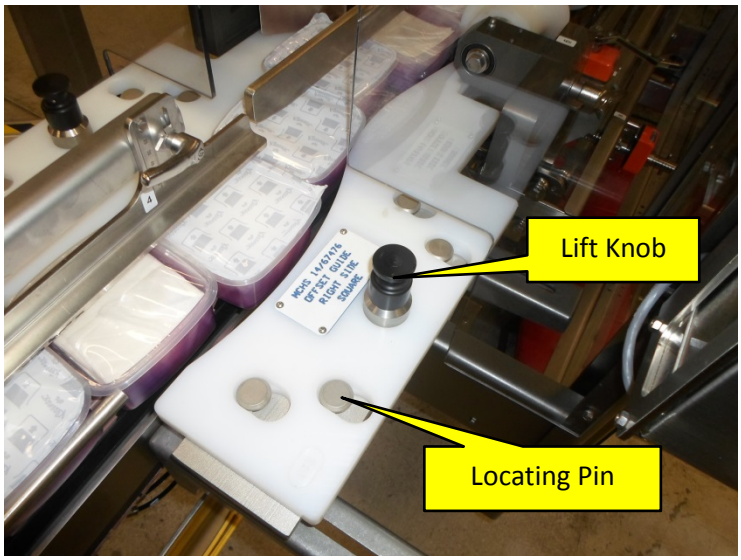

2.1 Lift up on the Lift Knob.

2.2 Slide the Offset Guide to the outside, out from under the Locating Pins, and remove it.

2.3 Place the new Offset Guide over the Locating Pins, and slide it inward to lock it in place.

Adjustment 3: Indexing Screw Changeout

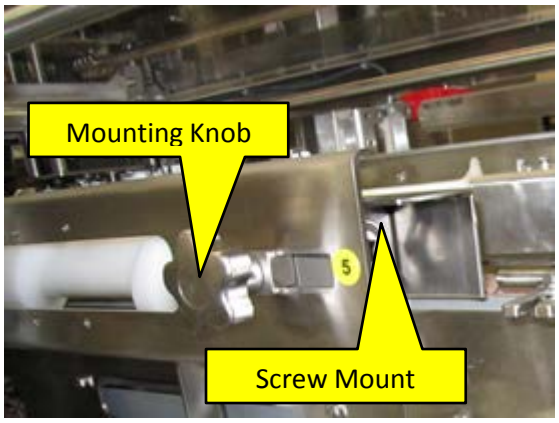

To change out the Left Indexing Screw:

1. Raise the Overhead Rails on the Infeed Conveyor.
2. Loosen the Mounting Knob and slide the Screw Mount Upstream.
3. Place the Indexing Screw on the Infeed Conveyor.
4. Slide the screw out the Infeed Conveyor upstream.
5. Locate the Indexing Screw called out on the Machine Adjustment Setting Sheet.
6. Place the New Indexing called out on the Machine Adjustment Setting Sheet.
7. Slide the Indexing Screw into the Indexing Section.
8. Place the Infeed Screw onto the Downstream Mount.
9. Slide the Upstream Mount into the Indexing Screw.
10. Tighten the Mounting Knob.

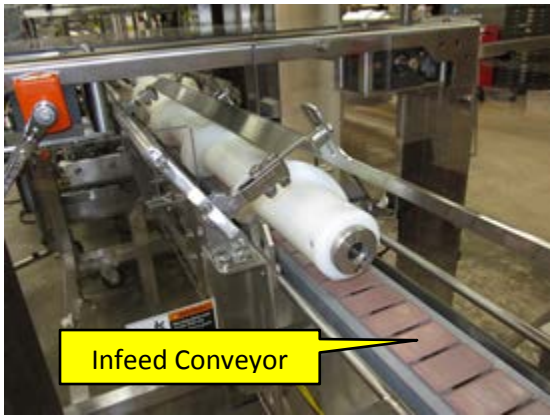

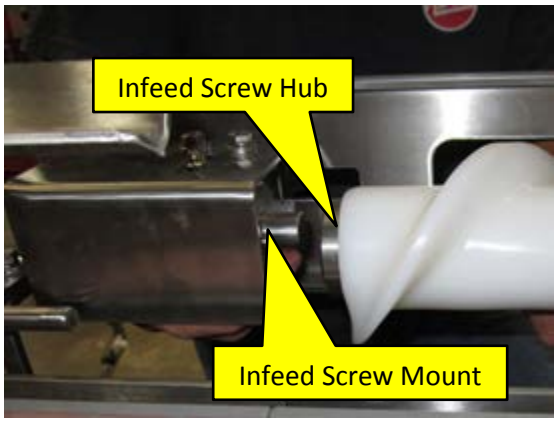

Adjustment 4: Digital Counter Adjustments

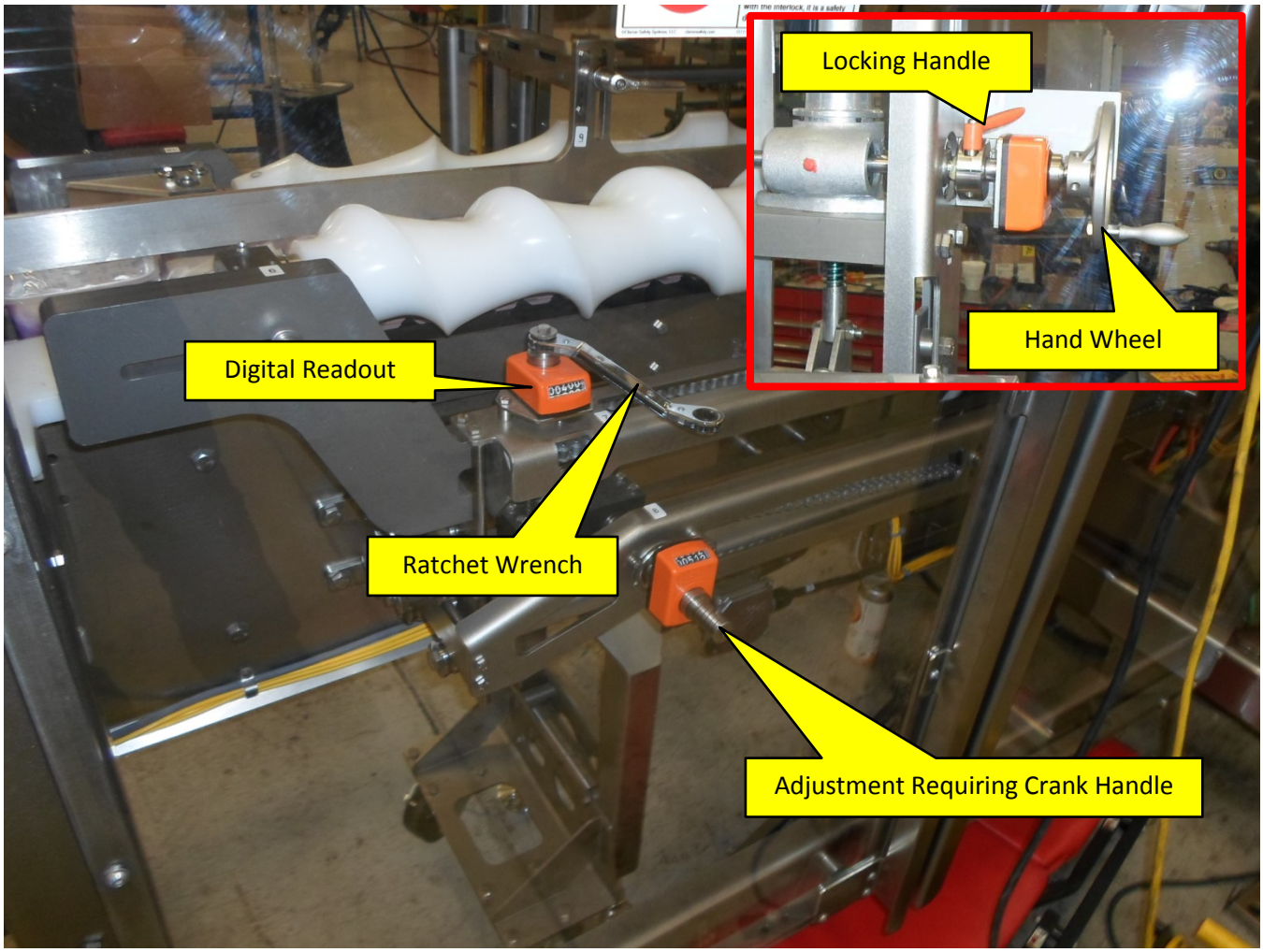

4.1 Using the attached Ratchet Wrench, Hand Wheel, or by attaching the supplied Crank Handle, adjust the component till the Digital Readout indicates the setting on the Machine Adjustment Settings Sheets.

NOTE: Some adjustments have a Locking Handle to prevent drift, make sure to loosen these Locking Handles before making the adjustment.

Adjustment 5: Main Product Conveyor Side Guides

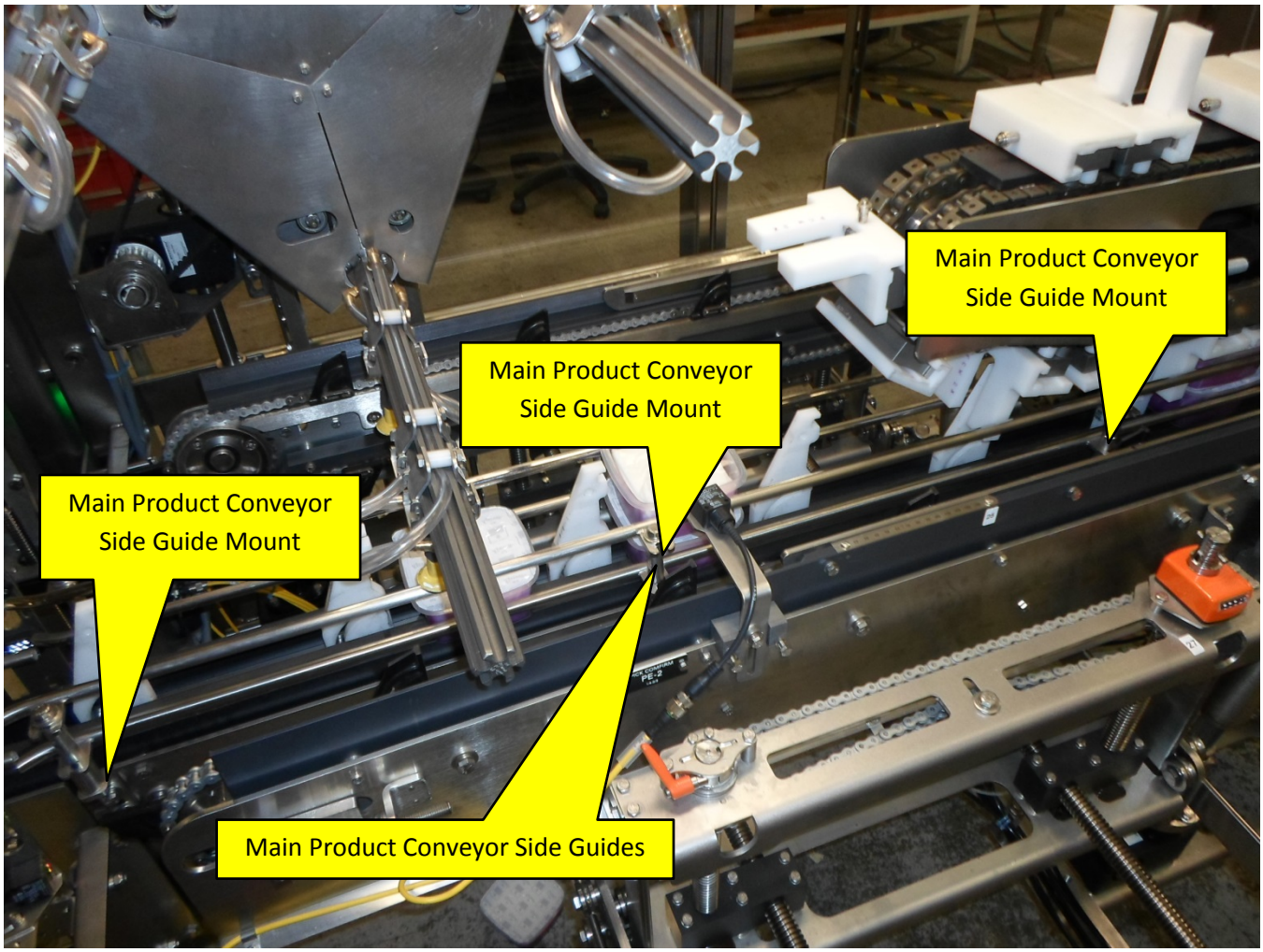

5.1 Lift the Main Product Side Guide off their mounts.

5.2 Locate the Main Product Side Guide indicated on the Machine Adjustment Settings Sheets.

5.3 Place the Main Product Side Guide onto the mounts.

Adjustment 6: Overhead Lug Changeout

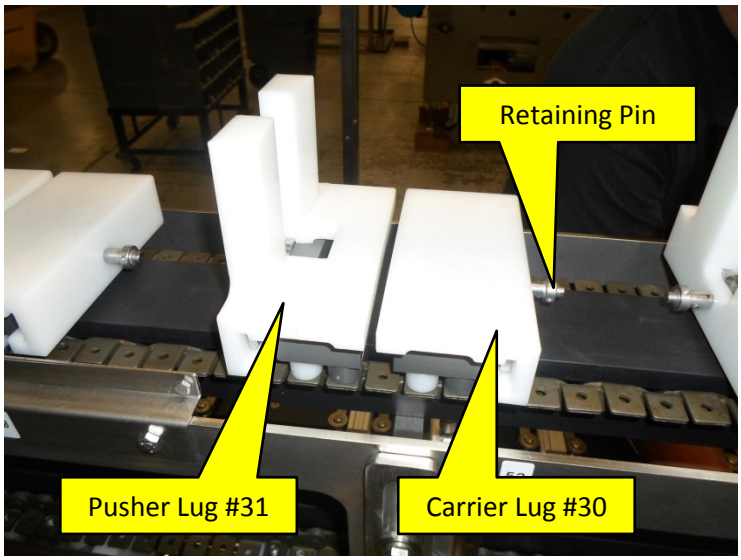

6.1 Pressing the center release button in the middle of the Retaining Pin pull it from the lug.

6.2 Slide the lug to either side to remove it from the chain.

6.3 Close the doors, and lift the emergency stops. Press Reset.

6.4 Jog the machine so the lugs that couldn't be accessed are now easily accessible, and repeat till all the lugs are removed.

6.5 Locate the lugs indicated on the Machine Adjustment Settings Sheet.

6.6 Place the lugs on the Chain and replace the Retaining Pins.

6.7 Jog the machine so the lugs that couldn't be accessed are now easily accessible, and repeat till all the lugs are installed.

Adjustment 7: Plow Down Adjustments

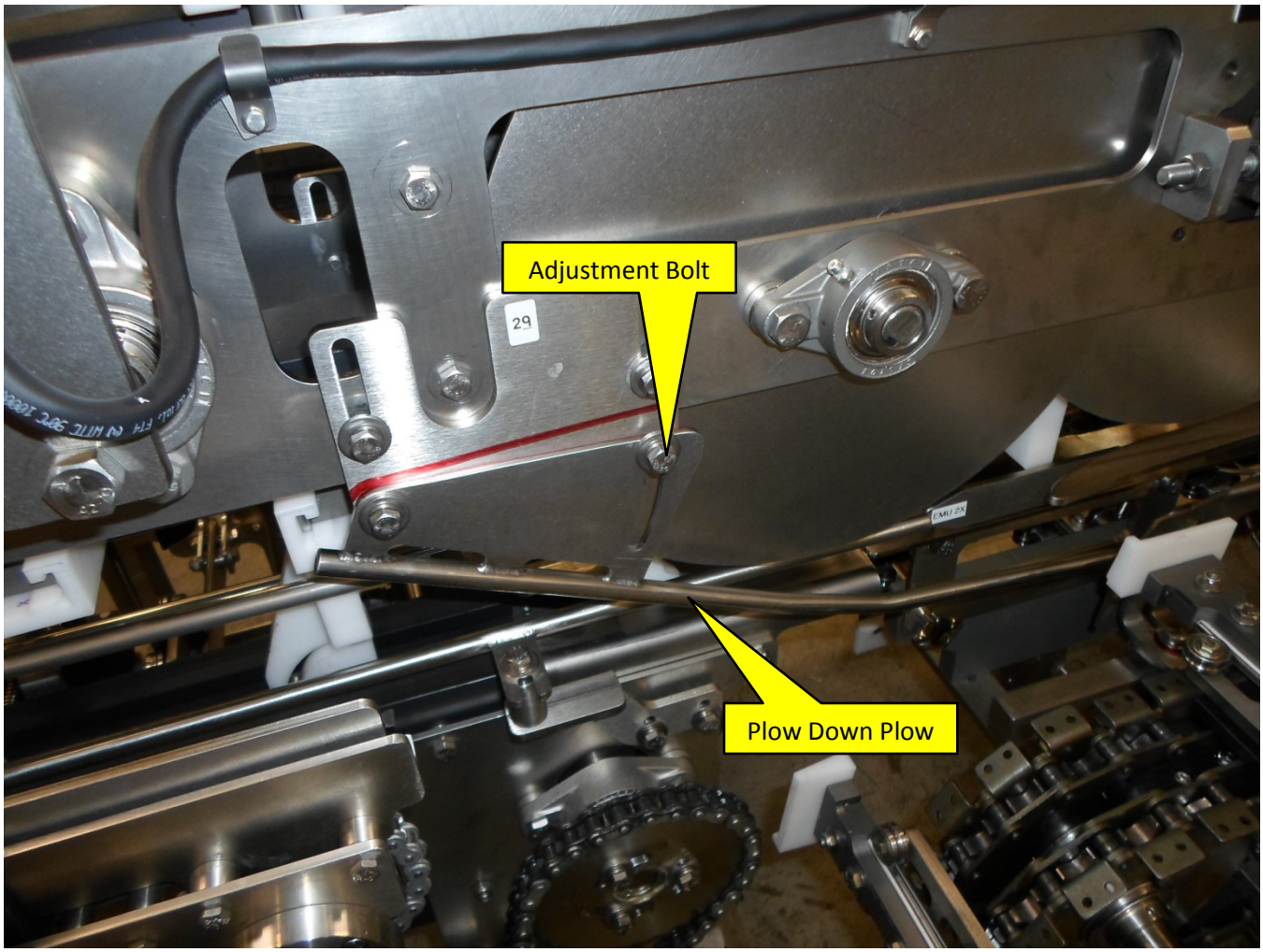

7.1 Loosen the adjustment bolt.

7.2 Slide the plow so its angle is the one indicated on the Machine Adjustment Settings Sheet.

7.3 Tighten the Adjustment Handle.

Adjustment 8: Magazine Gate Changeout

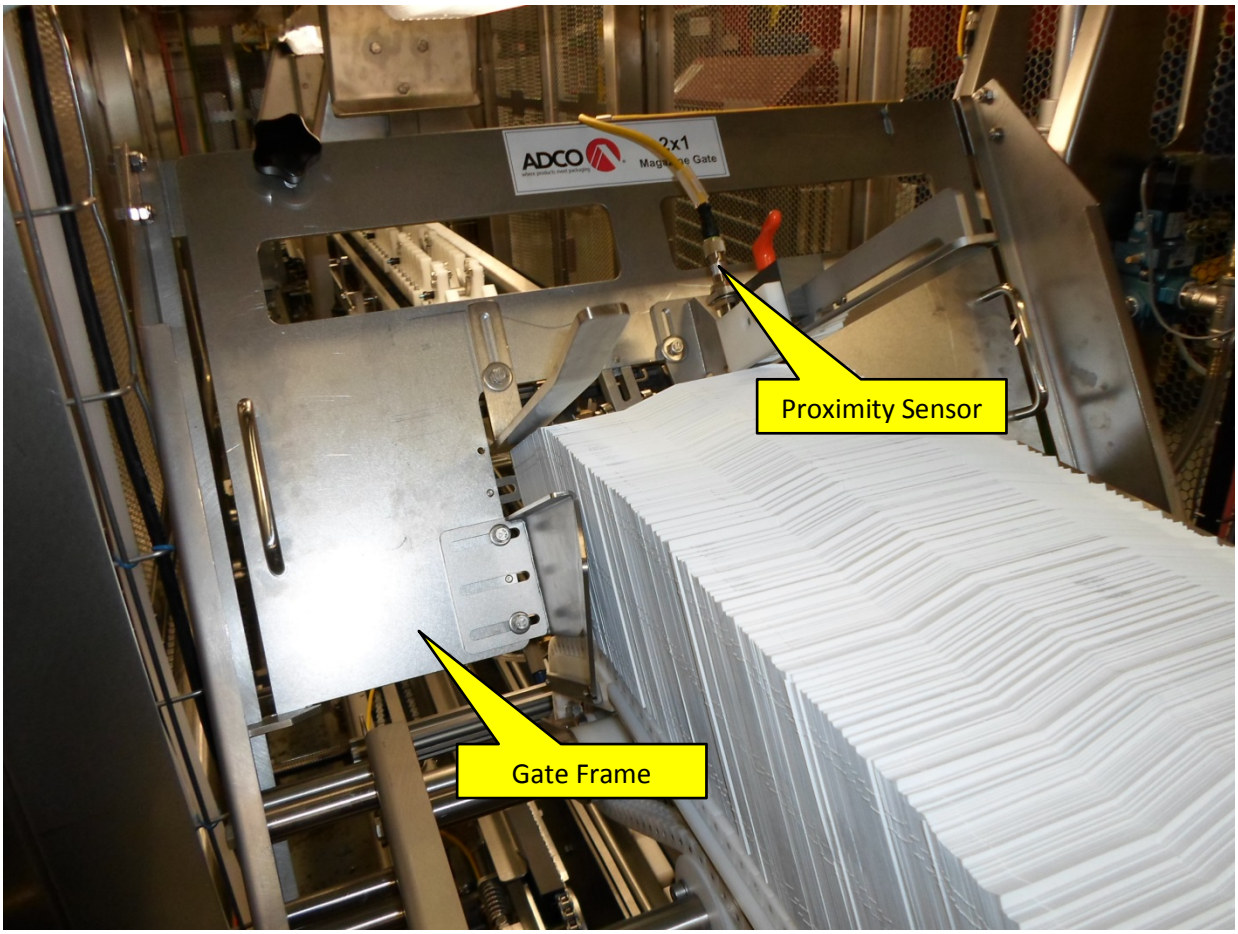

8.1 Remove the Proximity Sensor from the gate frame.

8.2 Remove the Hand Knob

8.3 Remove the Magazine Gate

8.4 Locate the gate indicated on the Machine Setting Adjustment Sheet

8.5 Place the new gate on the Tabs.

8.6 Replace the Hand Knobs.

8.7 Locate the Proximity Sensor and install it on the gate frame.

Adjustment 9: Chain Phase Adjustments

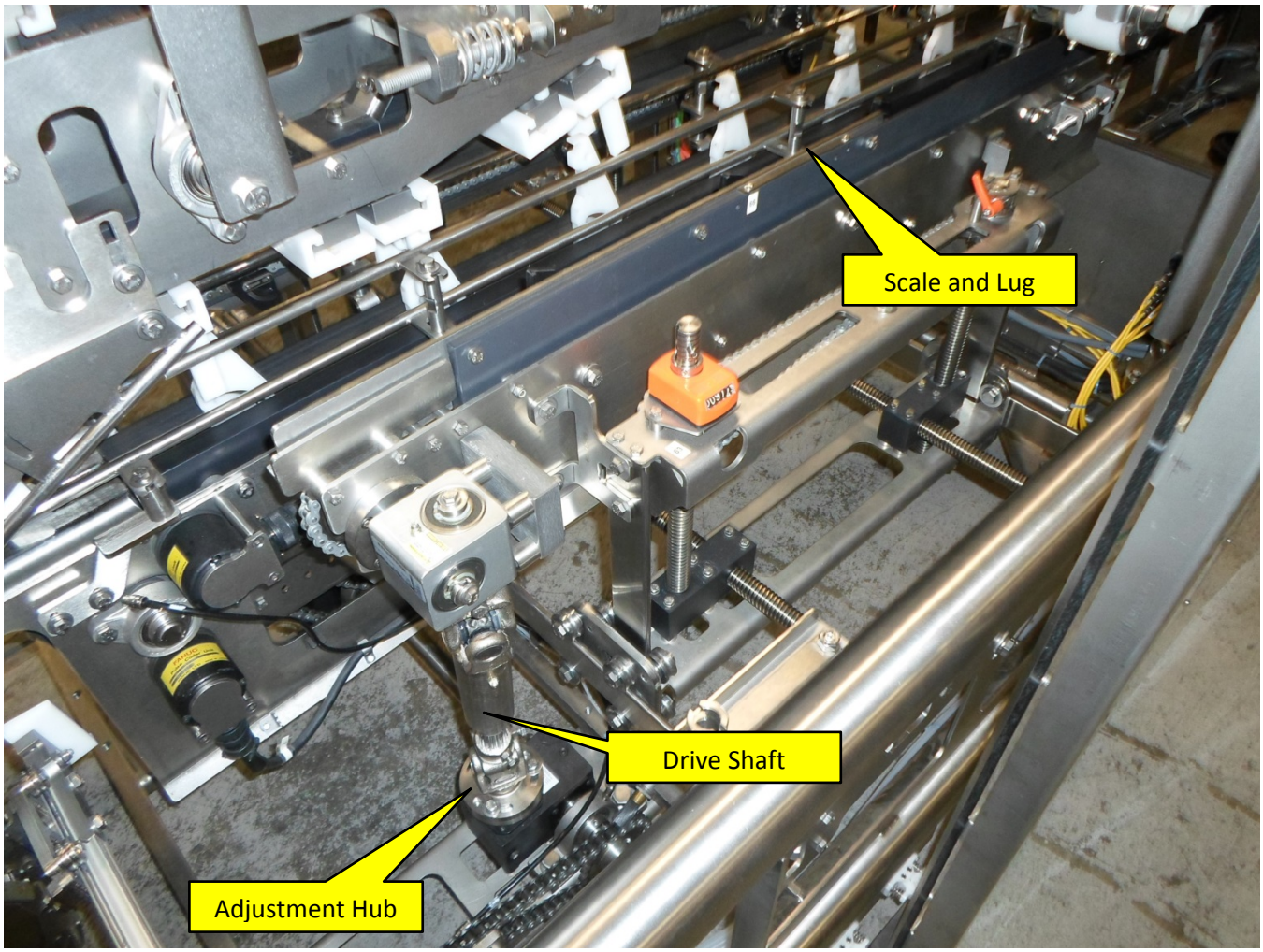

NOTE: Make sure the machine has its position at zero degrees. If not, the adjustment will be off and machine will not operate in a satisfactory fashion.

9.1 Loosen the three adjustment bolts on the Adjustment Hub.

9.2 Grab the Drive Shaft or Adjustment Wheel, and rotate it to the correct setting.

Adjustment 10: Recipe Change

To change the Recipe:

10.1 Go to the recipe screen.

NOTE: For navigation assistance, please see the HMI Screen Tree in Section 4 of this manual.

10.2 Press the ▲ and ▼ buttons to highlight the desired recipe.

10.3 Press and hold the Load Recipe Button.

10.4 When the currently running display shows the recipe needed to run the current carton, changeover is complete.

10.5 Go to the Main Control Screen.

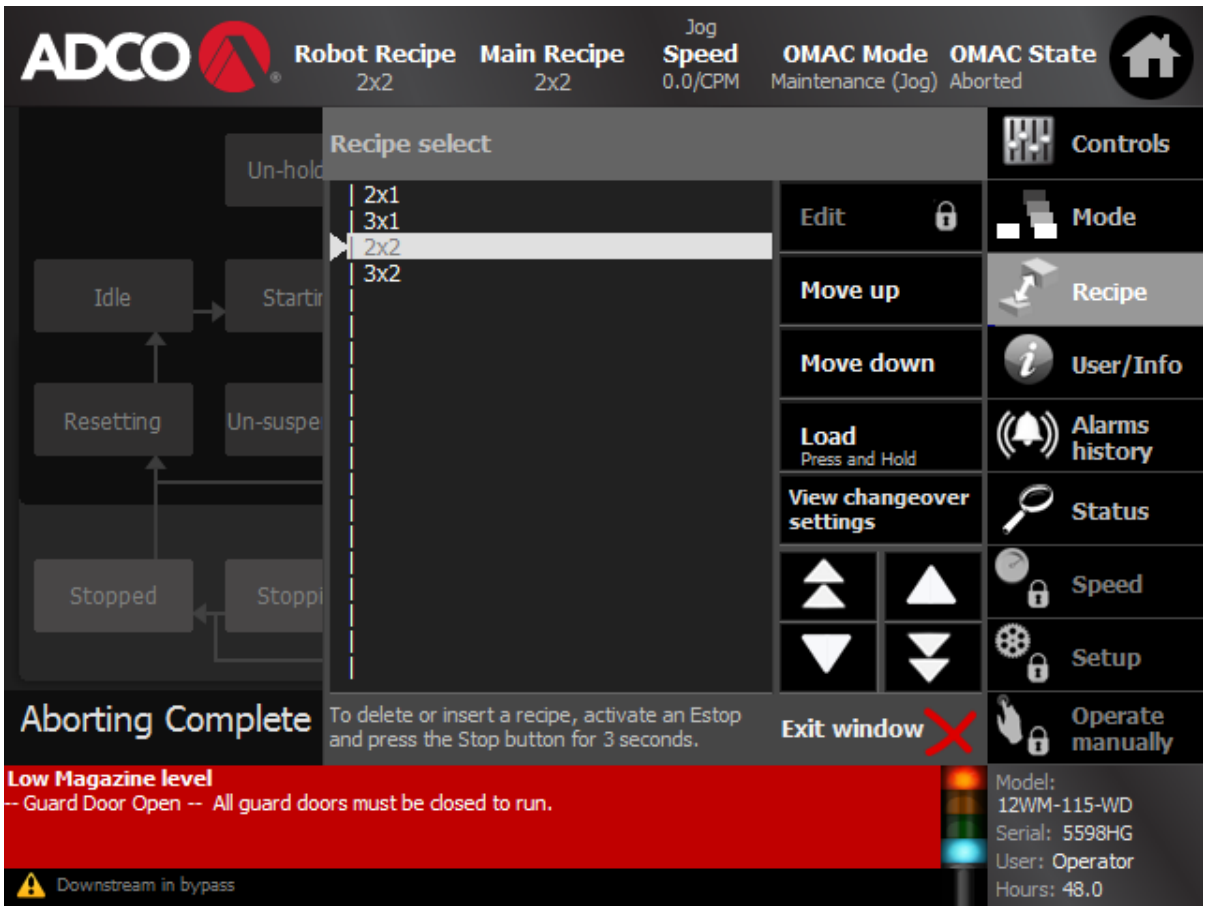

Chapter 6 – Parts Ordering

This Chapter of the Service Manual covers many installation instructions and guides. Guide lines include wiring and pneumatic recommendations and general guidelines to installation of the machine.

Table of Contents

Chapter 6 – Parts Ordering 6-1

Parts Ordering Procedure 6-6

Aftermarket Support Team 6-6

Recommended Parts Assembly Procedures 6-7

Disassembly 6-7

Reassembly 6-7

Roller (Machine) Chain Tension 6-7

Timing Belt Tension 6-8

Dual Universal Joint Shaft Reassembly Alignment 6-9

Bearings 6-9

Machine Parts List:

Spare Parts List 6-A

Fabricated Parts List 6-B

Purchase Parts List 6-C

Machine Drawings:

Section 01 – Frame 6-D

5624-01-001 – Frame Assembly

NOTE: ADCO Manufacturing purchases parts, such as gearboxes, glue melters, conveyors, and etc. from third party vendors. These purchase parts may or may not be called out on assembly drawings, but may have manuals of their own within the Component Literature folder on the PDF Manual CD.

NOTE: Part and Drawing Numbers may reflect a “-2” or “-3” at the end. The follow indicates the details of their meanings:

- “XXXX-XX-XXX” or “XXXX-XX-XXX-2” = Indicates as shown.
- “XXXX-XX-XXX-3” = Indicates opposite of shown.

Section 02 – Main Drive.....6-E

100-05-002 - #50-15T Idler Assembly

100-05-003 - #60-13T Idler Assembly

5624-02-001 – Main Drive Assembly

Section 03 – Product Conveyor 6-F

100-05-002 - #50-15T Idler Assembly

5624-03-002 – Product Conveyor Assembly

5598-03-007 – Encoder Track Assembly

5426-21-010 – Adjustable Track Assembly

5624-03-149 – Main Product Conveyor Chain

Section 04 – Sleeve Transfer 6-G

5624-04-001 – Sleeve Transfer Assembly

5624-04-002 – Carton Transfer Chain Assembly

5624-04-004 – Transfer Chain Adjustment Assembly, Vertical and Horizontal

5624-04-005 – Transfer Chain Adjustment Assembly, Vertical and Horizontal

5624-04-006 – Sleeve Transfer Assembly

5624-04-007 – Photo Eye Mount Carton Confirm Assembly

830-04-010 – Adjustable Idler Assembly

830-04-008 – INA Roller Carriage Plate Assembly

830-04-006 – INA Roller Carriage Plate Assembly

5426-04-101 – Transfer Chain Assembly

Section 05 – Rotary Feeder 6-H

5580-05-001 – Rotary Feeder Assembly

670-02-002 – Short Idler Assembly

670-02-003 – Long Idler Assembly

Section 06 – Feeder Mount 6-I

5624-06-001 – Feeder Mount Assembly

5624-06-002 – Feeder Mount Assembly

100-38-002 – Size 32 Washdown INA Roller

Section 07 – Sleeve Magazine 6-J

5624-07-001 – Sleeve Magazine Assembly

5402-07-002 – Magazine Base Assembly

5624-07-002 – Magazine Gate Assembly

5178-07-005 – Magazine Strongback Assembly

5178-07-004 – Guide Rail Mount Assembly

Section 08 – Magazine Mount 6-K

5624-08-001 – Magazine Mount Assembly

5624-08-002 – Magazine Carriage Assembly

Section 09 – Overhead Conveyor 6-L

5624-09-001 – Overhead Conveyor Assembly

5624-09-002 – Overhead Conveyor Lift Assembly

5624-09-003 – Overhead Conveyor Assembly, 7” Wide

5624-09-004 – Overhead Conveyor Drive Components

5580-09-004 – Vertical Overhead Lift Assembly

5304-09-004 – Take-Up Sprocket Assembly

830-09-008 - INA Roller Carrier Assembly

830-09-009 – Vertical Overhead Lift Assembly

830-09-011 – Conveyor Takeup Assembly

Section 10 – Overhead Conveyor Mods 6-M

5624-10-002 – Overhead Lugs, Rectangle Double Assembly

5624-10-003 – Overhead Lugs, Square Single Assembly

5624-10-004 – Overhead Lugs, Round Single Assembly

5624-10-005 – Overhead Lugs, Rectangle Single Assembly

5624-10-006 – Overhead Lugs, Square Double Assembly

5624-10-007 – Overhead Lugs, Round Double Assembly

5624-10-008 – Overhead Conveyor Chain Assembly

Section 11 – Side Closing Chains 6-N

5624-11-001 – Closing BC Assembly

5624-11-002 – Linear Rollers Assembly

5624-11-007 – Closing BC Side Assembly

5624-11-009 – Closing Arm Assembly

5624-11-012 – Sleeve Transfer Assembly

Section 12 – Bottom Squaring Chain 6-O

5624-12-002 – Squaring Chain Assembly

5426-12-104 – Squaring Chain Assembly

Section 13 – Closing Plows 6-P

5624-13-003 – Closing Plows Assembly

100-05-001 - #40-17T Idler Assembly

Section 14 – Discharge Conveyor 6-Q

5624-14-001 – Discharge Conveyor Assembly

Section 16 – Main Guards 6-R

5624-16-003 – Timing Screw Guards Assembly

5624-16-004 – Infeed Cage Assembly

5426-16-005 – Right Hand Upstream Guard Door Assembly

5426-16-006 – Right Hand Upstream Guard Door Assembly

5426-16-014 – Right Hand Upstream Guard Door Assembly

5624-16-015 – Right Hand Upstream Guard Door Assembly

Section 18 – Electrical 6-S

5579-18-001 – Electrical Components Assembly

5624-18-003 – Strong Arm Mount Assembly

5624-18-004 – Electrical Components Assembly

Section 19 – Indexing System 6-T

5624-19-004 – Adjustable Feed Mount Assembly

5624-19-005 – Feed Screw Mount Assembly

830-04-006 – INA Roller Carriage Plate Assembly

830-04-008 – INA Roller Carriage Plate Assembly

Section 20 – Infeed Conveyor 6-U

5624-20-002 – Infeed Conveyor Assembly

5624-20-003 – Infeed Leg Assembly

Section 21 – Robotics 6-V

5624-21-002 – Tracking Encoder Assembly

Section 22 – Robot Frame 6-W

5624-22-001 – Robot Cell Assembly

Section 23 – End-Of-Arm-Tooling (EOAT) 6-X

5624-23-002 – End of Arm Tooling Assembly

Section 24 – Robot Guards 6-Y

5624-24-001 – Left Guard Door Assembly

5624-24-002 – Right Guard Door Assembly

Parts Ordering Procedure

1. Have the ADCO machine Model Number and Serial Number available.
2. When ordering manufactured components, always specify:
   a. Brand Name
   b. Part Number
      - If this information is not available, please specify where the part is used on the machine (on which side of the machine the part is located, left/right side looking downstream, or which sub-assembly the part is used in feeder, hopper, loader, drive or infeed).
3. When ordering all other parts, always specify:
   a. ADCO Part Number:
      - A part number may be obtained by checking the actual part to be replaced for an inscribed number (Older machines may not have part number inscriptions).
      - A part number may be obtained by referring to the ADCO parts drawing sent with the machine.
      - If drawings are not available and a scribed part number can be read, specify where the part is used in the machine. Indicate which side of the machine, right or left, the part is located when looking downstream, or what the sub-assembly part is used in, such as the drive, hopper, loader, etc.
   b. Shafts: please specify Location, Diameter, and Length.
   c. Sprockets/Gear: Please specify Pitch between tooth centers, and number of teeth, and bore diameter.
4. Prices are subject to change.

Aftermarket Support Team

ADCO's After Market Support Team provides the following services for our customers:

1. Spare and Replacement Parts Ordering
2. Machinery Rebuilds and Refurbishing
3. Engineering for New Product/Carton Retrofits
4. Field Kits for ADCO and Competing Machinery
5. Replacement Service Manuals
6. Warranty Claims

For ***Parts Sales*** inquiries contact ADCO at TEL: (559) 875-5563, or send and email to: ams@adcomfg.com

For ***Service*** inquiries contact ADCO at TEL: (559) 875-5563, or send and email to: service@adcomfg.com

Recommended Parts Assembly Procedures

Disassembly

Before disassembling any part of the machine, it is recommended that parts be marked, either by marking them with a marker or a scratch awl. Confirm the parts ordered are the ones to be replaced before removing them by checking the assembly prints later in this chapter of the manual. If they are different, call ADCO immediately to confirm whether or not they are equivalent to the same part (Gearboxes, Interlock Switches, Etc).

Reassembly

If plows are ordered, they may not be bent due to the many variations in cartons. It is urged that the plows be bent for the cartons being ran, an adjustable end wrench and bending them while in place or by removing them and using a vice. This process may require jogging the machine multiple times to get it correct, call ADCO if there are some difficulties in replacing and bending the new plows.

When mounting parts, ADCO Manufacturing uses thread locker on all fasteners with the following exceptions:

1. Set Screws on Bearings – Bearing Set Screws are designed to be assembled without thread locker of any kind.
2. Fasters used to hold Lexan Polycarbonate – When the thread locker cures, it cracks and weakens the Lexan Polycarbonate, and therefore thread locker should be avoided.
3. Adjustment Handles – Adjustment handles used for changeovers and other frequent adjustments.
4. Pressed Cinch Nuts – Usually pressed into the Table Top Chain to attach the infeed and transfer lugs, or the lugs may become irremovable due to the nuts actually spinning when attempting to remove the lugs.
5. Keenserts – Usually used in plastics, thread locker may cause the Keensert to give way and strip the plastic when removing bolts.

This equipment was shipped assembled using Loctite #243 (Blue) Thread locker or Loctite #220 (Blue) Wicking Thread Locker on all of the threaded fasteners with the exceptions above. If the facility that this machine is located has similar specifications when assembling components, use them instead.

Roller (Machine) Chain Tension

When installing Roller Chain, such as the flights, proper tension is needs to be set to prevent abnormal wear and chain winding. Initial tension for roller chain power transmission is not as critical as for belt transmission. Roller chain should have a proper amount of slack.

When the chain makes an irregular clicking or popping sound, it is generally too tight. If the chain is too loose, machine components will surge back and forth, or the chain will "jump" or wind causing loss of machine position and / or timing. Slack should be adjusted to four percent of the chain span (Figure 1).

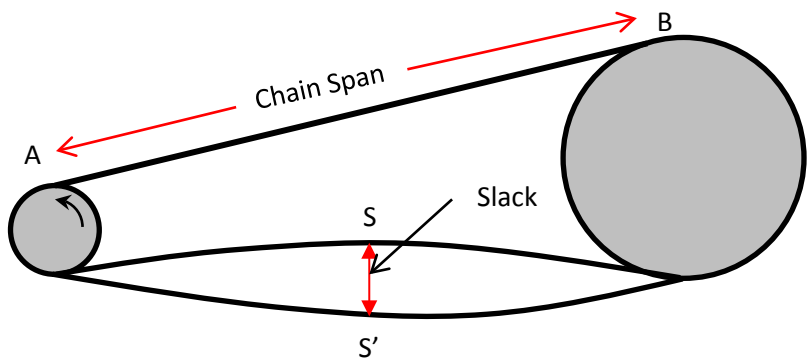

Figure 1

An example of how to calculate the proper amount of slack in a drive chain:

$$31.5"\ Chain\ Span\ \times\ (4\%)\ 0.04\ =\ 1.26"$$

If the chain fits into one of the following situations, adjust to two percent chain slack.

- Vertical power transmission
- Distance between shafts is more than 3 ½ Feet.
- Heavy loads and frequent starting.
- Sudden backward rotation.

For Spring Take-Up of Captured Flight Chains, take up the slack and compress the spring until the gaps between the coils are ½ of the relaxed spring gap.

For Take-Up of Non-Captured Flight Chains, the tension should be setup so the chain can be lifted 1 ½" for every 60" of Span.

Timing Belt Tension

Belt tension can be measured one of two ways. The first is simply grabbing the gear belt, and making sure it can be twisted 90°.

The second method is by using a belt tension gauge, this is normally needed on very short spans where twisting the belt is impossible. One such belt tensioner is the Dodge V-Belt Tension Tester (Part #109082), it is small enough to measure the tension on the smaller spans.

Dual Universal Joint Shaft Reassembly Alignment

Drive shafts with dual universal joints need to be assembled so the yokes of the universal joints are properly aligned to help prevent additional wear on the joints due to misalignment. There are two examples below, the first is correctly aligned and the second is incorrectly aligned.

CORRECT PHASE

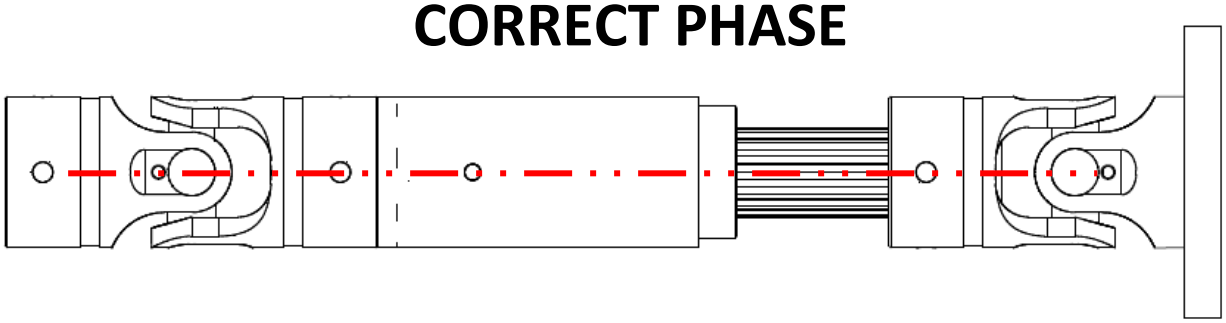

WRONG PHASE

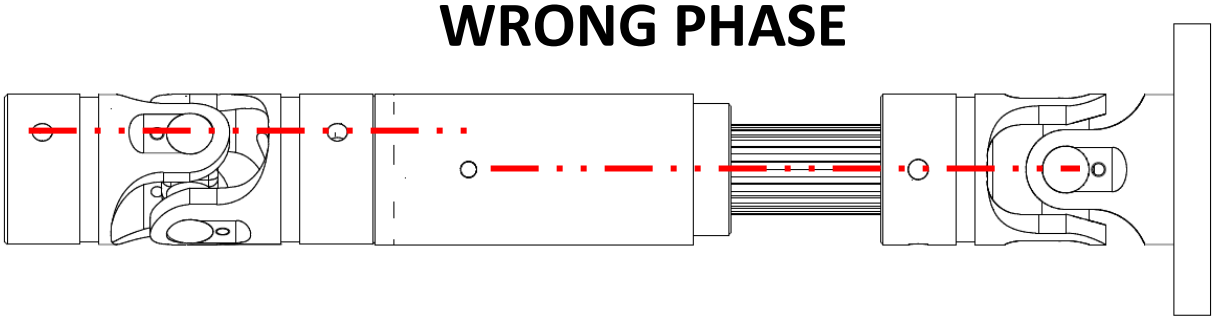

Bearings

Clean and lightly oil the shaft (aerosol oil or viscosity of less ISO VG 15) to allow easier sliding of the bearing onto the shaft. If needed, use a mallet and pipe to tap on the inner race only. Taping on the outer race and / or mounting block may cause damage to the bearing or shorten its life dramatically.

Use the following tables for proper tightening torque of the set screws (NOTE: If a bearing shows up with documentation, and differs from the following, use that instead. Check the manufacturers recommended settings if needed on their website).

Standard Steel Set Screws

Set Screw Size	Max. Recom. Torq.
10-32	28 in. lb.
¼-28	66 in. lb.
5/16-24	126 in. lb.
3/8-24	228 in. lb.
7/16-20	306 in. lb.
½-20	330 in. lb.

400 Series Set Screws

Set Screw Size	Max. Recom. Torq.
¼-28	54 in. lb.
5/16-24	110 in. lb.
3/8-24	205 in. lb.

Continued…

To properly tighten the set screws without causing elongation or cracking, use the following 3-Step alternating instructions:

1. First set screw should not be tightened greater 50% of the above Maximum Recommended Torque (MRT) or “snug”.
2. The second set screw may be tightened to the MRT.
3. The process is completed by returning to the first set screw and tightening it to the MRT.

NOTE: Torque wrench is highly recommended for accurate tightening.

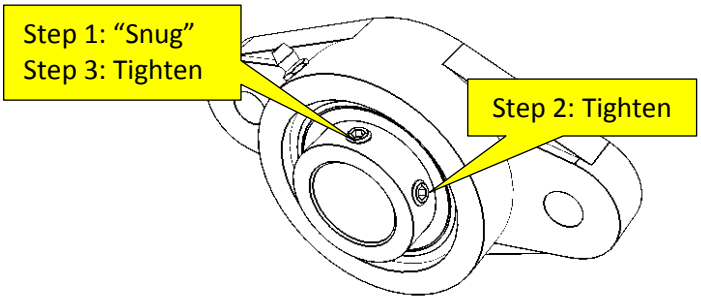

Spare Parts

RECOMMENDED STOCK

SECTION	M.S.	ADC	BRAND	CATALOG NO.	DESCRIPTION	QTY
02-MAIN DRIVE		51226	LOVEJOY	11075	SPIDER - SS095 COUPLING URETHANE - OPEN CENTER	1
02-MAIN DRIVE		39090	MRC	R-10ZZST	BEARING - Ø5/8" RADIAL SS	2
02-MAIN DRIVE		57348	NORDGEAR	SK12063 AF SM5 -100L/4 NSD+	RIGHT ANGLE HELICAL WORM GEARMOTOR, 3hp MOTOR, 15.57:1 RATIO = 110 OUTPUT RPM, AF (B5 flange) MOUNT, M3 MOUNT POS. W/ TERM. BOX @ 4, NSD+ PAINT, S.S. 35mm HOLLOW BORE	1
02-MAIN DRIVE		57331	R+W	SKP/200/W/35/100/60-160/SS	TORQUE LIMITER - SKP MODEL, 200 SERIES, SINGLE POSTION ENGAGEMENT, 35mm BORE, 100Nm DISENGAGEMENT TORQUE, 60-160Nm ADJUST RANGE, STAINLESS STEEL	1
02-MAIN DRIVE		30166	SPICER	5-170X	CROSS & BEARING KIT	2
02-MAIN DRIVE		54323	WC BRANHAM	4303-0031	GEARBOX - SPIRAL BEVEL 1:1, 4.125 WIDE, 3 WAY, 25MM S.S. SHAFTS [FOOD GRADE GREASE]	1
02-MAIN DRIVE		52996	WC BRANHAM	4304-0908	Gearbox, Right Angle, Glide Right, T-O-M S-R Metric, 25mm to 30mm R/H	1
02-MAIN DRIVE		52997	WC BRANHAM	4304-0909	Gearbox, Right Angle, Glide Right, T-O-M S-R Metric, 25mm to 30mm L/H	1
02-MAIN DRIVE		56072	IPTCI	SUCSFB 207	BEARING - Ø35mm 3-HOLE FLANGE - ALL STAINLESS	1
02-MAIN DRIVE		51423	IPTCI	SUCSFL 207	BEARING - Ø35mm 2 HOLE FLANGE ALL STAINLESS	1
02-MAIN DRIVE		57531	IPTCI	SUCSP 207	BEARING - Ø35mm PILLOW BLOCK	1
02-MAIN DRIVE		57532	IPTCI	SUCSP206	BEARING - Ø30mm PILLOW BLOCK ALL STAINLESS	1
03-PRODUCT CONVEYOR		52395	SKF	SS 6005-2RS1	DBL. SEALED RADIAL BRG.- 25mm BORE STAINLESS STEEL	2
03-PRODUCT CONVEYOR		49697	IPTCI	SUCSFL205	BEARING - Ø25mm 2 HOLE FLANGE ALL STAINLESS	1
03-PRODUCT CONVEYOR		39646	SPIROLOX	RR-137-S	RETAINING RING - SS INTERNAL	2
04-SLEEVE TRANSFER		31792	HARKESS	#L-2421	NYLON PUSHER LUG FOR #2040 CHAIN (5398-04-103)	4
04-SLEEVE TRANSFER		45828	IPTCI	SSER-204	INSERT BEARING - 20MM ID X 47MM OD X 15.9MM WIDE SS	1
04-SLEEVE TRANSFER		57351	MISUMI	SBGRN6004ZZ	Bearings with Housings - Direct Mount, Unretained, 20mm, S.S.	1
04-SLEEVE TRANSFER		52797	SKF	W 6004-2RS1	DBL. SEALED RADIAL BRG.- 20mm BORE STAINLESS STEEL	2
04-SLEEVE TRANSFER		44897	SPIROLOX	RR165SS	RETAINING RING	2

PRICES ARE SUBJECT TO CHANGE WITHOUUT NOTICE! - M.S. = SAME PART LISTED IN MULTIPLE SECTIONS

Spare Parts

ADCO
where products meet packaging

RECOMMENDED STOCK

SECTION	M.S.	ADC	BRAND	CATALOG NO.	DESCRIPTION	QTY
04-SLEEVE TRANSFER		47665	TOLOMATIC	0124-0410	COMPACT GB - SLIDE RITE 1:1 RATIO (15mm TO 15mm BORE) RH DRIVE	1
04-SLEEVE TRANSFER		48349	TOLOMATIC	0125-0410	COMPACT GB - SLIDE RITE 1:1 RATIO (15mm TO 15mm BORE) LH DRIVE	1
05-ROTARY FEEDER		41855	CARTER	SY-40-S	BEARING - YOKE ROLLER Ø1-1/4" OD X Ø3/8" ID STAINLESS STEEL	2
05-ROTARY FEEDER		30057	DURKEE-ATWOOD	322L050	GEARBELT	1
05-ROTARY FEEDER		31623	DURKEE-ATWOOD	420L050	GEARBELT	1
05-ROTARY FEEDER		56641	GARLOCK	GM2428-32	GARMAX FIBER WOUND BEARING Ø 1 1/2" I.D. X 2" long (830-05-026)	1
05-ROTARY FEEDER		46634	IPTCI	SSER205	BEARING - Ø25mm SS INSERT	1
05-ROTARY FEEDER		49283	IPTCI	SSER207	BEARING - Ø35mm SS INSERT	1
05-ROTARY FEEDER		46419	SMALLEY	C200-H3-S17	WAVE SPRING - STAINLESS STEEL 90lb LOAD, .75" FREE HEIGHT FOR 2.00" BORE	1
05-ROTARY FEEDER		48342	SMC	KXL10-03S	FITTING - 90° MALE ROTARY HI-SPEED 10mm TUBE - 3/8 RPT	1
05-ROTARY FEEDER		30588		#58	#58 YELLOW SUCTION CUP	9
06-FEEDER MOUNT		54871	BECKER	90139700007	REPLACEMENT VANES	1
06-FEEDER MOUNT		51979	BECKER	9095050100	REPLACEMENT FILTER INTERNAL	1
06-FEEDER MOUNT		46634	IPTCI	SSER205	BEARING - Ø25mm SS INSERT	1
06-FEEDER MOUNT			MISUMI	HTBN 1080-S8M-250	GEARBELT - S8M HIGH TORQUE 135 TOOTH - 1080mm LG X 25mm WIDE	1
06-FEEDER MOUNT		52884	WC BRANHAM	4304-0906	STANDARD GB - GLIDE RITE 1:1 RATIO (25mm TO 25mm BORE) RH DRIVE	1
07-SLEEVE MAGAZINE		38161	HABASIT	C0040K0079DPAA+001	HabaCHAIN Miniature 40P (Straight) 10ft BOX	1
07-SLEEVE MAGAZINE		57571	NORDGEAR	1SMID31AZ-63L/4 CUS	GEARMOTOR, 0.25 HP, 60:1 RATIO, M3 MOUNT, NSD+ PAINT, TEFC, T. BOX @ 4, 230/460V 60HZ	1
09-OH CONVEYOR		46634	IPTCI	SSER205	BEARING - Ø25mm SS INSERT	2
09-OH CONVEYOR		39090	MRC	R-10ZZST	BEARING - Ø5/8" S.S. RADIAL	2
09-OH CONVEYOR		54323	WC BRANHAM	4303-0031	Spiral Bevel 3-Way Right Angle Gearbox with 4.125 in. Wide Housing, 1:1 Ratio, Base Mounting and 25mm Diameter Shafts	1
09-OH CONVEYOR		49697	IPTCI	SUCSFL205	BEARING - Ø25mm 2 HOLE FLANGE ALL STAINLESS	1
09-OH CONVEYOR		576.33	IPTCI	SUCSP205	BEARING PILLOW BLOCKS - Ø25mm ALL STAINLESS	1
09-OH CONVEYOR		51491	IPTCI	SUCSFL 204	2-BOLT FLANGE BRG. - 20mm BORE ALL STAINLESS	1
09-OH CONVEYOR		57572	MISUMI	HTBN760S8M-250	TIMING BELT, S8M PITCH, 760mm LONG, 25mm WIDE	1

PRICES ARE SUBJECT TO CHANGE WITHOUUT NOTICE! - M.S. = SAME PART LISTED IN MULTIPLE SECTIONS

Spare Parts

RECOMMENDED STOCK

SECTION	M.S.	ADC	BRAND	CATALOG NO.	DESCRIPTION	QTY
09-OH CONVEYOR		57571	NORDGEAR	SK1SMID31AZ-63L4	GEARMOTOR, 0.25 HP, 30:1 RATIO, 56 R.P.M OUTPUT, M1 MOUNT, NSD+ PAINT, TEFC, 230/460V 60HZ, 14mm HOLLOW BORE, B14 FLANGED MOUNT, T.BOX @ 2	1
10-O.H. CONV MODS		50579	McMASTER CARR	92384A032	QUICK RELEASE PIN - Ø1/4" X 1/2" LG (REMOVE PULL RING)	2
11-SIDE CLOSE BCL		47726	CARTER	SCH-24-SB	3/4" HEAVY DUTY CAM FOLLOWER - STAINLESS STEEL, 7/16" SHANK	2
11-SIDE CLOSE BCL		47969	INA	LFR 50/8 NPP RB	ROLLER, SIZE 32, WASHDOWN	4
11-SIDE CLOSE BCL		48524	IPTCI	SSER-206	INSERT BEARING - 30MM ID X 62MM OD X 22MM WIDE SS	2
11-SIDE CLOSE BCL		50579	McMASTER CARR	92384A032	QUICK RELEASE PIN - Ø1/4" X 1/2" LG (REMOVE PULL RING)	2
11-SIDE CLOSE BCL		51491	IPTCI	SUCSFL204	2 HOLE FLANGE BRG - Ø20mm, ALL STAINLESS	1
11-SIDE CLOSE BCL		57534	IPTCI	SUCSFL208	2 HOLE FLANGE BRG - Ø40mm, ALL STAINLESS	1
11-SIDE CLOSE BCL		57010	HKK	ADC-060-R-A2-EV	AQUA C2060H A2 ATTACHMENT ROLLER CHAIN (A2 AT EVERY PITCH)	153"
11-SIDE CLOSE BCL		39090	MRC	R-10ZZST	BEARING - Ø5/8" RADIAL SS	2
12-SQUARING CHAIN		31792	HARKESS	#L-2421	NYLON PUSHER LUG FOR #2040 CHAIN (4970-12-116)	2
12-SQUARING CHAIN		46634	IPTCI	SSER205	BEARING - Ø25mm SS INSERT	1
12-SQUARING CHAIN		39090	MRC	R-10ZZST	SEALED S.S. RADIAL BRG - 5/8" BORE	2
12-SQUARING CHAIN		45505	SKF	SS 61904-2RS1	DBL. SEALED RADIAL BRG.- 20mm I.D. 37mm O.D. 9mm WIDE S.S.	2
14-DISCHARGE CONV		51767	HABASIT/KVP	SM605	BELT - STRAIGHT 1/2" PITCH SMOOTH TOP BLUE POM (ACETAL), 3" WIDE	48"
14-DISCHARGE CONV		57357	NORDGEAR	SK1SMID31VZ-63L	1/4 HP GEARMOTOR - 224RPM (7.5:1 RATIO) - 14mm SOLID S.S. SHAFT - SIDE B - "M3" MOUNTING - NSD + PAINT - 230/460V-60Hz	1
14-DISCHARGE CONV		54258	IPTCI	SUCSFB205	BEARING - Ø25mm 3 HOLE FLANGE ALL STAINLESS	1
15-SEALING SYSTEM		38966	NORDSON	143300	HOSE, 12FT GLUE (WASHDOWN CONSTRUCTION)	1
15-SEALING SYSTEM		57439	NORDSON	8517903	MINIBLUE II APPLICATOR, 230V, SD-SERIES 44 SOLENOID, .012" ORIFICE, 100 MESH - 45° CONN., WATERWASH CORDSET, WITH COVER CONFIGURATION CODE #MB2-BEL-00AIA-000-WTSSDF41-010-000-00	1

PRICES ARE SUBJECT TO CHANGE WITHOUUT NOTICE! - M.S. = SAME PART LISTED IN MULTIPLE SECTIONS

Spare Parts

RECOMMENDED STOCK

SECTION	M.S.	ADC	BRAND	CATALOG NO.	DESCRIPTION	QTY
15-SEALING SYSTEM		38650	NORDSON	322412	Saturn Single Orifice Nozzle, 0.012" Ø	1
16-MAIN GUARDS		50410	Allen Bradley	440N-Z21S16H	SENSAGUARD INTERLOCK SWITCH, 18mm PLASTIC BARREL, WITH 6" PIGTAIL W/ 8PIN MICRO M12 CONNECTOR	1
16-MAIN GUARDS		49026	Allen Bradley	#82653	CORDSET - 10M FOR SENSAGUARD SW 8PIN MICRO M12 CONNECTOR	1
16-MAIN GUARDS		54054	ADCO	100-39-108	HINGE - LOWER GUARD DOOR	2
16-MAIN GUARDS		54055	ADCO	100-39-109	HINGE - UPPER GUARD DOOR	2
18-ELECTRICAL		40298	Allen Bradley	100-C09DJ01	9 amp, 24vdc coil, NC aux contacts	1
18-ELECTRICAL		49713	Allen Bradley	140M-C2E-B40	Drive overcurrent protection device	1
18-ELECTRICAL		49443	Allen Bradley	140M-C2E-B63	Drive overcurrent protection device	1
18-ELECTRICAL		50592	Allen Bradley	140M-C2E-C10	Drive overcurrent protection device	1
18-ELECTRICAL		46897	Allen Bradley	1492-CAB010B69	Connection cable for IFM module,	1
18-ELECTRICAL		46899	Allen Bradley	1492-CAB010E69	Connection cable for IFM module,	1
18-ELECTRICAL		46931	Allen Bradley	1492-IFM20F-3	I/O Interface Module, 16 Pt, Sensor Power	1
18-ELECTRICAL		45499	Allen Bradley	1492-IFM20FN	I/O Interface Module, 16 Pt, Narrow	1
18-ELECTRICAL		49446	Allen Bradley	1492-SP1C050	1 pole, 5A, 230v, circuit breaker	1
18-ELECTRICAL		45265	Allen Bradley	1494F-S1	Disconnect Operating Handle, Side	1
18-ELECTRICAL		53782	Allen Bradley	1769-L27ERM-QBFC1B	CompactLogix CPU, 1Mb RAM, 16 In, 16Out, Analog, HSC, 4 Axis motion	1
18-ELECTRICAL		40916	Allen Bradley	1769-OB16P	Micrologix 1500 16pt output card, solid	1
18-ELECTRICAL		56905	Allen Bradley	1783-BMS10CGN	Stratix 5700 ethernet switch,10 port w/CIP	1
18-ELECTRICAL		56233	Allen Bradley	1783-US8T	Stratix 2000 ethernet switch, 8 port	1
18-ELECTRICAL		45675	Allen Bradley	193-ED1CB	1.0 - 5.0 amp electronic overload relay	1
18-ELECTRICAL		53572	Allen Bradley	194R-FC03	Disconnect Operating Accessory, Cable	1
18-ELECTRICAL		53631	Allen Bradley	194R-J60-1753	60 amp, fused IEC disconnect (J fuses)	1
18-ELECTRICAL		47806	Allen Bradley	2090-K2CK-D15M	Low Profile breakout for K3x0 motor	1
18-ELECTRICAL		53780	Allen Bradley	2097-V34PR5-LM	Kinetix 350, 460v 3ph, 2.0Kw, 5.7a output	1
18-ELECTRICAL		54994	Allen Bradley	25B-D2P3N104	1HP, 3Ph Input, 460v 2.3 A Output, "A"	1
18-ELECTRICAL		55942	Allen Bradley	25B-D6P0N104	3HP, 3Ph Input, 460v 6.0 A Output, "A"	1
18-ELECTRICAL		52244	Allen Bradley	2711P-T10C4D8	PV+6 (Touch only), 10" Color, RS232,Cat5,	1
18-ELECTRICAL		45092	Allen Bradley	42EF-B1JBBE-F4	Photo eye, background supression, LO	1
18-ELECTRICAL		46125	Allen Bradley	42EF-G1MPA-F4	Photo eye, fiber-optic, LO/DO	1
18-ELECTRICAL		43558	Allen Bradley	42EF-P2MPB-F4	Photo eye, retroreflective, sourcing	1
18-ELECTRICAL		47309	Allen Bradley	43GR-TMC25SL	Fiber Optic cable, Bifurcated, Right	1
18-ELECTRICAL		54742	Allen Bradley	440R-E23097	Emergency Stop Relay Expansion, 4 N.O.	1
18-ELECTRICAL		41057	Allen Bradley	440R-M23084	MSR138 1DP, Emergency Stop Relay 2	1
18-ELECTRICAL		34819	Allen Bradley	700-HK32Z24-4	5a,DPDT, 24vdc, slim line	1
18-ELECTRICAL		34772	Allen Bradley	700-HN122	Relay Base, DIN rail mount, gen purpose	1
18-ELECTRICAL		56126	Allen Bradley	800FP-LMT44PN3RX11S	Red, Illuminated, Twist to Release, 40mm	1
18-ELECTRICAL		55666	Allen Bradley	842E-CM-MIP10BA	842E-CM Ethernet/IP Encoder - CIP	1
18-ELECTRICAL		45094	Allen Bradley	872C-DH3CP12D4	N.C. Inductive prox switch	1

PRICES ARE SUBJECT TO CHANGE WITHOUUT NOTICE! - M.S. = SAME PART LISTED IN MULTIPLE SECTIONS

Spare Parts

RECOMMENDED STOCK

SECTION	M.S.	ADC	BRAND	CATALOG NO.	DESCRIPTION	QTY
18-ELECTRICAL		45093	Allen Bradley	872C-DH3NP12D4	N.0. Inductive prox switch	1
18-ELECTRICAL		54996	Banner	SSA-EB1PLGR-12ECQ8	E-Stop Pushbutton, Complete	1
18-ELECTRICAL		45739	Edison	EDCC-12	12 amp, Midget fuse, Class CC, SloBlow	3
18-ELECTRICAL		45740	Edison	EDCC-15	15 amp, Midget fuse, Class CC, SloBlow	3
18-ELECTRICAL		45731	Edison	EDCC-2	2 amp, Midget fuse, Class CC, SloBlow	2
18-ELECTRICAL		45741	Edison	EDCC-20	20 amp, Midget fuse, Class CC, SloBlow	3
18-ELECTRICAL		45733	Edison	EDCC-4	4 amp, Midget fuse, Class CC, SloBlow	5
18-ELECTRICAL		45734	Edison	EDCC-5	5 amp, Midget fuse, Class CC, SloBlow	1
18-ELECTRICAL		48011	efector	PK6224	Pressure switch, 0 to 150 psi, Micro	1
18-ELECTRICAL		45339	Littlefuse	JTD-50	50 amp, J Type fuse	3
18-ELECTRICAL		47563	Mac	56C-33-501JD=4358	Large 3 way 1/2" port	1
18-ELECTRICAL		56176	Marathon	BCI-PUR-HR-XXFFMF-S-	FEEDBACK CABLE, 20m	1
18-ELECTRICAL		56175	Marathon	BCI-PUR-XXFPMF-16S-	MTR. POWER CABLE, 20m	1
18-ELECTRICAL		56082	Murr	7000-12481-0000000	M12 field wireable connector, male, 4	1
18-ELECTRICAL		53044	Murr	8000-84410-3331000	PNP 4-Port wiring block w/10m cable	1
18-ELECTRICAL		53045	Murr	8000-88410-3621000	PNP 8-Port wiring block w/10m cable	1
18-ELECTRICAL		45097	Murr (Iris)	7000122210241000	M12, 4 pin, Cable, 10m, straight, yellow	1
18-ELECTRICAL		45096	Murr (Iris)	7000122210240500	M12, 4 pin,Cable, 5m straight, yellow	1
18-ELECTRICAL		48061	Nordson	1053289	KIT,CIRCUIT BOARD,ETHERNET CARD	1
18-ELECTRICAL		47483	Nordson	772 033	Pressure transducer, DIN rail mount	1
18-ELECTRICAL		54723	ReignPower	LP1150-24MADA	24VDC Power Supply, 6.25a, 150w	1
18-ELECTRICAL		55403	Turck	8.0010.40H0.0000	Turck Encoder single point tether arm	1
18-ELECTRICAL		55601	Turck	E-RKC 8T-264-30	Cable, 30m, straight, black jacket, M12, 8 conductor, 4 STP,	1
18-ELECTRICAL		56625	Turck	T8.5826.1U62.1200	Encoder, SS, 0.50 Inch Hollow bore, 1200ppr, 24vdc, 5-30vdc Push/pull output	1
18-ELECTRICAL		55538	Turck	WKC8T-10/S771	M12, 8 pin, Cable, 10m, 90deg, gray jacket	1
18-ELECTRICAL		49105	SMC	SV2100-5W1U-02N	Pneumatic control valve, 5/2, Single	1
19-INDEXING SYSTEM		50328	Allen Bradley	MPL-B320P-MJ72AA	SERVO, 320-SERIES, 460v, 5000rpm, MULTI-	1
21-ROBOTICS			FANUC	A05B-2550-K030	CONTROLLER BATTERY (CPU)	1
21-ROBOTICS			FANUC	A60L-0001-0046#1.0	FUSE 1/FUSE 2: protect +24V E-STOP	10
21-ROBOTICS			FANUC	A60L-0001-0046#2.0	FUSE 3: protect +24V at power supply unit	10
21-ROBOTICS			FANUC	A60L-0001-0175#0.5A	FU1/FU2: protect fan motor	10
21-ROBOTICS			FANUC	A60L-0001-0290#LM10C	FUSE 2: protect +24V output for peripheral I/F	10
21-ROBOTICS			FANUC	A60L-0001-0290#LM32C	FS1/ FS2: Servo Amp control circuit/ End	10
21-ROBOTICS			FANUC	A60L-0001-0290#LM50C	FUSE 1/FS3: protect +24V output	10
21-ROBOTICS			FANUC	A98L-0040-0255	J1-J6 Reducer Oil	1
23-EOAT		57640	McMaster	9287K143	TORSION SPRING	10
23-EOAT		57830	NUMATICS	NSBPC010ANOXXG2	VACUUM GENERATOR	1
23-EOAT		57496	PIAB	G.S50T50.B1.SI.G14M.00	50 MM SUCTION CUP	10
20-INFEED CONVEYOR		49697	IPTCI	SUCSFL205	BEARING - Ø25mm 2 HOLE FLANGE	1
20-INFEED CONVEYOR		57380	NORDGEAR	SK03MD50VZH-71L4	1/2 HP GEARMOTOR - 86RPM (20:1 RATIO)	1

PRICES ARE SUBJECT TO CHANGE WITHOUUT NOTICE! - M.S. = SAME PART LISTED IN MULTIPLE SECTIONS

Spare Parts

RECOMMENDED STOCK

SECTION	M.S.	ADC	BRAND	CATALOG NO.	DESCRIPTION	QTY
20-INFEED CONVEYOR		31999	UNI	34LF880URTK350	UNI 880 RIB CHAIN 3 1/2" WIDE 10ft PER BOX 20ft NEEDED	120"
19-INDEXING SYSTEM		51783	MISUMI	HTBN 490 S5M 250	GEARBELT - HIGH TORQUE S5M TYPE	1
19-INDEXING SYSTEM		52797	SKF	W 6004-2RS1	DBL. SEALED RADIAL BRG.- 20mm BORE	2
19-INDEXING SYSTEM		57369	STOBER	P421SPZ0010MT - AB	PLANETARY GEARHEAD, SERVOFIT "P"	1
21-ROBOTICS				D-Cell "ALKALI" Battery	ROBOT Unit Battery (Absolute Pulse Coder)	4

PRICES ARE SUBJECT TO CHANGE WITHOUUT NOTICE! - M.S. = SAME PART LISTED IN MULTIPLE SECTIONS

Fabrication Parts

SECTION	DATE	PART NO.	DESCRIPTION	QTY
01-MAIN FRAME	**REF**	**5624-01-001**	**ASSEMBLY - FRAME**	**REF**
01-MAIN FRAME	02/03/15	5624-01-100	WELDMENT - MAIN FRAME	1
01-MAIN FRAME	03/26/15	5228-01-105	PANEL - CASTER MOUNT	4
01-MAIN FRAME	03/26/15	5228-01-106	WELDMENT - RETAINER - CASTER MOUNT	5
01-MAIN FRAME	03/26/15	5304-01-102	BLOCK - CASTER MOUNT	4
01-MAIN FRAME	03/26/15	5624-01-116	RETAINER - CASTER MOUNT	3
01-MAIN FRAME	05/14/15	100-22-104	HANGER - CRANK HANDLE	2
01-MAIN FRAME	05/14/15	100-22-126	WELDMENT - CRANK HANDLE	2
02-MAIN DRIVE	**REF**	**100-05-002**	**ASSEMBLY - #50-15T IDLER (WASHDOWN)**	**REF**
02-MAIN DRIVE	**REF**	**100-05-003**	**ASSEMBLY - #60-13T IDLER (WASHDOWN)**	**REF**
02-MAIN DRIVE	**REF**	**5624-02-001**	**ASSEMBLY - MAIN DRIVE**	**REF**
02-MAIN DRIVE	01/06/15	7710783	BRACKET - IDLER ADJUST	1
02-MAIN DRIVE	01/06/15	100-05-102	WELDMENT - #50-15T IDLER (WASHDOWN)	2
02-MAIN DRIVE	01/06/15	100-05-103	WELDMENT - #60-13T IDLER (WASHDOWN)	1
02-MAIN DRIVE	01/06/15	100-05-115	SPACER - IDLER LUBE	3
02-MAIN DRIVE	01/06/15	100-05-116	BOLT - IDLER LUBE	3
02-MAIN DRIVE	01/06/15	100-07-100	U-JOINT - DRIVE 25mm	15
02-MAIN DRIVE	01/06/15	100-07-128	U-JOINT - DRIVE SPICER 20mm	2
02-MAIN DRIVE	01/06/15	5178-02-109	END CAP - TOLOMATIC	2
02-MAIN DRIVE	01/06/15	5178-02-110	SLEEVE - TOLOMATIC	2
02-MAIN DRIVE	01/06/15	5178-02-115	SHAFT - OVERHEAD CONVEYOR DRIVE SPLINE	1
02-MAIN DRIVE	01/06/15	5178-02-118	SHAFT - TOLOMATIC DRIVE	2
02-MAIN DRIVE	01/06/15	5178-02-122	COUPLING HALF - LOVEJOY JAW #SS095	4
02-MAIN DRIVE	01/06/15	5304-02-104	HUB - FEMALE TIMING	4
02-MAIN DRIVE	01/06/15	5319-02-111	U-JOINT - DRIVE 30mm	5
02-MAIN DRIVE	01/06/15	5319-06-102	WELDMENT - UNIVERSAL TIMING HUB	4
02-MAIN DRIVE	01/06/15	5398-02-109	PLATE - BEARING MOUNT	1
02-MAIN DRIVE	01/06/15	5624-02-100	PLATE - BEARING MOUNT	1
02-MAIN DRIVE	01/06/15	830-02-100	BAR - DOWNSTREAM GEARBOX CROSS	2
02-MAIN DRIVE	01/06/15	830-02-101	PLATE - BEARING MOUNT	1
02-MAIN DRIVE	01/06/15	830-02-102	SPROCKET - DRIVEN @ MAIN	1
02-MAIN DRIVE	01/06/15	830-02-103	PLATE - GEARBOX MOUNT	1
02-MAIN DRIVE	01/06/15	830-02-104	SHAFT - TOLOMATIC DRIVE	1
02-MAIN DRIVE	01/06/15	830-02-105	BAR - GEARBOX CROSS	1
02-MAIN DRIVE	01/06/15	830-02-106	BAR - MID CROSSMEMBER	1
02-MAIN DRIVE	01/06/15	830-02-107	CHANNEL - GEARBOX MOUNT	2
02-MAIN DRIVE	01/06/15	830-02-109	PLATE - GEARBOX MOUNT	1
02-MAIN DRIVE	01/06/15	830-02-110	PLATE - IDLER MOUNT	1
02-MAIN DRIVE	01/06/15	830-02-117	GUIDE - MAIN DRIVE CHAIN	1
02-MAIN DRIVE	01/06/15	830-02-118	SHAFT - MAIN DRIVE	1
02-MAIN DRIVE	01/06/15	830-02-119	BAR - GEARBOX CROSS	1
02-MAIN DRIVE	01/06/15	830-02-120	SHAFT - TORQ GUARD	1
02-MAIN DRIVE	01/06/15	IDLER BRKT	A27-1.250	2
02-MAIN DRIVE	01/06/15	SHAFT	M20-25-5.250 (FEEDER VERT DRIVE)	1
02-MAIN DRIVE	01/06/15	SHAFT	SHAFT M21-30-36.000-2.000-2.000 (UPSTREAM LINE)	1
02-MAIN DRIVE	01/06/15	SHAFT	SHAFT M21-30-41.375-2.000-2.000 (LINESHAFT DWNSTRM)	1
02-MAIN DRIVE	01/06/15	SPACER	A09-S-1.000-0.422-0.375 (GEARBOX MOUNT)	8
02-MAIN DRIVE	01/06/15	SPACER	A09-S-0.625-0.344-0.300 (TOLO GBOX)	12
02-MAIN DRIVE	01/06/15	SPACER	A09-S-1.000-0.422-1.000 (BCL DRIVE P.B. BEARING)	2
02-MAIN DRIVE	01/06/15	SPACER	A09-S-1.000-0.422-1.438 (GEARBOX MOUNT)	4

Fabrication Parts

SECTION	DATE	PART NO.	DESCRIPTION	QTY
02-MAIN DRIVE	01/06/15	SPACER	A09-S-1.250-0.500-1.250 (P.B. BEAARING)	2
02-MAIN DRIVE	01/06/15	SPACER	A09-S-1.250-0.516-0.250 (UNDER 3HOLE BEARING)	3
02-MAIN DRIVE	01/06/15	SPACER	A09-S-1.250-0.516-0.250 (MAIN DRIVE BEARING)	2
02-MAIN DRIVE	01/06/15	SPACER	A09-S-1.250-0.563-0.313 (TRANSFER P.B. BEARINGS)	4
02-MAIN DRIVE	01/06/15	SPACER	M10-S-1.000-M8-1.500-M8 (TRANSFER IDLER MOUNT)	2
02-MAIN DRIVE	01/06/15	SPACER	A09-S-1.000-0.344-1.036 (CHAIN GUIDE)	3
02-MAIN DRIVE	01/06/15	SPACER	A09-S-1.875-0.422-0.179 (SHAFT CAPT)	1
02-MAIN DRIVE	01/06/15	SPACER	M10-S-1.250-M10-3.250-M10 (BEARING MOUNT PLATE)	3
02-MAIN DRIVE	01/06/15	SPROCKET	M01-S-501-14-30 (BCL DRIVE)	1
02-MAIN DRIVE	01/06/15	SPROCKET	M01-S-501-15-25 (TRANSFER DRIVE)	1
02-MAIN DRIVE	01/06/15	SPROCKET	M01-S-501-20-30 (TRANSFER DRIVEN)	1
02-MAIN DRIVE	01/06/15	SPROCKET	M01-S-601-22-35 (MAIN DRIVE)	1
02-MAIN DRIVE	02/04/15	SPACER	A09-S-1.000-0.422-1.438 (GEARBOX MOUNT)	4
02-MAIN DRIVE	03/05/15	SPACER	A09-S-1.000-0.422-0.375 (GEARBOX MOUNT)	7
02-MAIN DRIVE	03/06/15	SPACER	A09-S-1.000-0.656-0.472 (main drive idler)	1
02-MAIN DRIVE	03/06/15	NUTPLATE	M24-S-1.000-2.000-1.250-0.375-M10 (main drive idler)	1
02-MAIN DRIVE	03/06/15	SPROCKET	M01-S-501-15-30 (product conv drive)	1
02-MAIN DRIVE	03/06/15	SPROCKET	M08-S-0050-30-S (product conv driven)	1
02-MAIN DRIVE	03/06/15	HUB	M07-S-25-0.750-A (product conv driven)	1
02-MAIN DRIVE	03/06/15	5624-02-101	BAR - GEARBOX CROSS (reworked 830-02-119)	1
02-MAIN DRIVE	03/11/15	5624-09-110	WELDMENT - OVERHEAD CONVEYOR DRIVE SPLINE	1
02-MAIN DRIVE	03/12/15	5624-02-102	SHAFT - CLOSING DRIVE	1
02-MAIN DRIVE	03/12/15	5624-18-112	ANGLE - ENCODER MOUNT	1
02-MAIN DRIVE	03/23/15	5624-02-103	DRIVE COUPLER - OV'HD CONV. (made by rework)	2
02-MAIN DRIVE	03/23/15	5624-02-105	SHAFT - DRIVE SPLINE TALL	2
02-MAIN DRIVE	03/25/15	SPACER	A09-S-1.000-0.422-1.688 (GBOX PLATE)	8
03-PRODUCT CONVEYOR	**REF**	**100-05-002**	**ASSEMBLY - #50-15T IDLER (WASHDOWN)**	**REF**
03-PRODUCT CONVEYOR	**REF**	**5624-03-002**	**ASSEMBLY - PRODUCT CONVEYOR ASSEMBLY**	**REF**
03-PRODUCT CONVEYOR	**REF**	**5624-21-001**	**ASSEMBLY - MAIN GEAR FOR PULSE ENCODER**	**REF**
03-PRODUCT CONVEYOR	**REF**	**5598-03-007**	**ASSEMBLY - ENCODER TRACK**	**REF**
03-PRODUCT CONVEYOR	**REF**	**5426-21-010**	**ASSEMBLY - ADJUSTABLE TAKUP**	**REF**
03-PRODUCT CONVEYOR	**02/26/14**	**5624-03-149**	**ASSEMBLY - MAIN PROD CONV CHAIN**	**1**
03-PRODUCT CONVEYOR	01/19/15	100-05-102	WELDMENT - #50-15T IDLER (WASHDOWN)	1
03-PRODUCT CONVEYOR	01/19/15	100-05-115	SPACER - IDLER LUBE	1
03-PRODUCT CONVEYOR	01/19/15	100-05-116	BOLT - IDLER LUBE	1
03-PRODUCT CONVEYOR	01/19/15	4676-0906	SHAFT - T.U. ADJUSTER ALL THREAD	2
03-PRODUCT CONVEYOR	01/19/15	5076-10-106	BLOCK - PROD. CONV T.U. SCREW	2
03-PRODUCT CONVEYOR	01/19/15	5154-23-124	SPACER - LUBE	1
03-PRODUCT CONVEYOR	01/19/15	5304-20-124	WELDMENT - CASTER MOUNT	1
03-PRODUCT CONVEYOR	01/19/15	5304-20-125	CHANNEL - CASTER MOUNT BRACE	1
03-PRODUCT CONVEYOR	01/19/15	5426-03-100	TRACK - UPPER CHAIN	1
03-PRODUCT CONVEYOR	01/19/15	5426-03-101	BAR - PRODUCT SUPPORT	1
03-PRODUCT CONVEYOR	01/19/15	5426-03-102	TRACK - LOWER CHAIN	1
03-PRODUCT CONVEYOR	01/19/15	5426-03-108	SPROCKET - MAIN DRIVE	1
03-PRODUCT CONVEYOR	01/19/15	5426-03-118	BRACKET - CONVEYOR PANEL	8
03-PRODUCT CONVEYOR	01/19/15	5426-21-158	BOLT - 12MM LUBE	1
03-PRODUCT CONVEYOR	01/19/15	5426-21-162	SPROCKET - IDLER	1
03-PRODUCT CONVEYOR	01/19/15	5426-21-163	BLOCK - CONVEYOR IDLER SLIDER	2
03-PRODUCT CONVEYOR	01/19/15	5624-03-104	PANEL - PRODUCT CONVEYOR	1
03-PRODUCT CONVEYOR	01/19/15	5624-03-105	PANEL - PRODUCT CONVEYOR	1
03-PRODUCT CONVEYOR	01/19/15	5624-03-106	PANEL - PRODUCT CONVEYOR	1
03-PRODUCT CONVEYOR	01/19/15	5624-03-107	WELDMENT - CONVEYOR MOUNT	1

Fabrication Parts

SECTION	DATE	PART NO.	DESCRIPTION	QTY
03-PRODUCT CONVEYOR	01/19/15	5624-03-113	BAR - IDLER RETRUN UPPER	1
03-PRODUCT CONVEYOR	01/19/15	5624-03-114	SHAFT - #60 CHAIN TAKEUP	1
03-PRODUCT CONVEYOR	01/19/15	5624-03-115	TRACK - AT CHAIN INCLINE	1
03-PRODUCT CONVEYOR	01/19/15	5624-03-116	TRACK - UPPER CHAIN	1
03-PRODUCT CONVEYOR	01/19/15	5624-03-117	TRACK - CHAIN RETURN	1
03-PRODUCT CONVEYOR	01/19/15	5624-03-118	BAR - IDLER RETRUN LOWER	1
03-PRODUCT CONVEYOR	01/19/15	5624-03-119	BAR - PRODUCT SUPPORT	1
03-PRODUCT CONVEYOR	01/19/15	5624-03-120	PANEL - PRODUCT CONVEYOR	1
03-PRODUCT CONVEYOR	01/19/15	5624-03-122	ANGLE - INDEX TRANSFER BRIDGE	1
03-PRODUCT CONVEYOR	01/19/15	5624-03-123	BAR - TRANSAFER SUPPORT	1
03-PRODUCT CONVEYOR	01/19/15	5624-03-124	BAR - TRANSFER SUPPORT	1
03-PRODUCT CONVEYOR	01/19/15	5624-03-125	TRACK - UPPER CHAIN	1
03-PRODUCT CONVEYOR	01/19/15	5624-03-126	BAR - PRODUCT SUPPORT	1
03-PRODUCT CONVEYOR	01/19/15	5624-03-127	BAR - HARKESS RUNNER	1
03-PRODUCT CONVEYOR	01/19/15	5624-03-128	TRACK - CHAIN RETURN	1
03-PRODUCT CONVEYOR	01/19/15	5624-03-130	BAR - HARKESS RUNNER	1
03-PRODUCT CONVEYOR	01/19/15	5624-03-131	WELDMENT - CONVEYOR LEG	1
03-PRODUCT CONVEYOR	01/19/15	5624-03-132	ANGLE - INFEED SPLICE / BRACE	2
03-PRODUCT CONVEYOR	01/19/15	5624-03-133	PLATE - CONVEYOR SPLICE	2
03-PRODUCT CONVEYOR	01/19/15	5624-03-135	BLOCK - TAKEUP	2
03-PRODUCT CONVEYOR	01/19/15	5624-03-136	PLATE - CONVEYOR SPLICE	2
03-PRODUCT CONVEYOR	01/19/15	5624-03-137	BAR - SIDE GUIDE MOUNT	22
03-PRODUCT CONVEYOR	01/19/15	5624-03-138	BAR - SIDE GUIDE MOUNT DWNSTRM	2
03-PRODUCT CONVEYOR	01/19/15	5624-03-139	WELDMENT - CONVEYOR MOUNT	1
03-PRODUCT CONVEYOR	01/19/15	5624-03-143	BAR - HARKESS RUNNER	1
03-PRODUCT CONVEYOR	01/19/15	5624-03-144	BAR - HARKESS RUNNER	1
03-PRODUCT CONVEYOR	01/19/15	5624-03-145	SHAFT - MAIN DRIVE	1
03-PRODUCT CONVEYOR	01/19/15	5624-03-146	NUTPLATE - SUPPORT RUNNER	1
03-PRODUCT CONVEYOR	01/19/15	830-09-125	BUSHING - SPRING END	4
03-PRODUCT CONVEYOR	01/19/15	IDLER BRKT	A27-1.250	1
03-PRODUCT CONVEYOR	01/19/15	NUTPLATE	M24-S-5.375-6.375-0.750-0.250-M6	2
03-PRODUCT CONVEYOR	01/19/15	SHAFT	M16-25-0.375-M8 (idler runner)	2
03-PRODUCT CONVEYOR	01/19/15	SPACER	A09-S-1.000-0.344-0.172 (chain runner)	13
03-PRODUCT CONVEYOR	01/19/15	SPACER	A09-S-1.000-0.344-0.484 (support runner)	13
03-PRODUCT CONVEYOR	01/19/15	SPACER	A09-S-1.000-0.344-0.734 (runner mount)	2
03-PRODUCT CONVEYOR	01/19/15	SPACER	A09-S-1.000-0.422-0.250 (conveyor mount)	6
03-PRODUCT CONVEYOR	01/19/15	SPACER	A09-S-1.000-0.468-0.250 (beaaring mount)	4
03-PRODUCT CONVEYOR	01/19/15	SPACER	M10-H-1.000-M8-1.938-M8 (caster mount)	4
03-PRODUCT CONVEYOR	01/19/15	SPACER	M10-S-1.000-M10-2.070-M10 (leg mount)	4
03-PRODUCT CONVEYOR	01/19/15	SPACER	M10-S-1.000-M8-1.237-M8 (idler mount)	2
03-PRODUCT CONVEYOR	01/19/15	SPACER	M10-S-1.000-M8-1.750-M8 (harknes runner)	12
03-PRODUCT CONVEYOR	01/19/15	SPACER	M10-S-1.000-M8-2.000-M8 (harknes runner)	4
03-PRODUCT CONVEYOR	01/19/15	SPACER	M10-S-1.250-M8-4.000-M8 (conveyor brace)	9
03-PRODUCT CONVEYOR	01/19/15	SPACER	M10-S-1.250-M8-4.500-M8 (conveyor brace)	3
03-PRODUCT CONVEYOR	01/19/15	SPACER	A09-S-1.000-0.344-1.071 (splice mount)	4
03-PRODUCT CONVEYOR	01/22/15	5624-03-111	PANEL - PRODUCT CONVEYOR	1
03-PRODUCT CONVEYOR	01/22/15	5624-03-112	CHANNEL - PRODUCT COVNEYOR	1
03-PRODUCT CONVEYOR	01/22/15	5624-03-121	ANGLE - PRODCUT SUPPORT AT INDEX	1
03-PRODUCT CONVEYOR	02/03/15	5624-03-148	LUG - MAIN PRODCUT CONV. #60 HARKNES	45
03-PRODUCT CONVEYOR	02/26/14	100-45-145	CONNECTING LINK - #2060 HARKESS	45
03-PRODUCT CONVEYOR	03/03/15	SPACER	A09-S-1.000-0.344-0.250 (splice plate)	22
03-PRODUCT CONVEYOR	03/03/15	SPACER	A09-S-1.000-0.344-0.500 (splice plate)	4
03-PRODUCT CONVEYOR	03/04/15	SPACER	A09-S-1.000-0.344-0.422 (INCLINE TRACK & IDLER)	10
03-PRODUCT CONVEYOR	03/10/15	5624-03-150-2	ANGLE - PRODUCT SUPPORT	1
03-PRODUCT CONVEYOR	03/10/15	5624-03-150-3	ANGLE - PRODUCT SUPPORT	1

Fabrication Parts

SECTION	DATE	PART NO.	DESCRIPTION	QTY
03-PRODUCT CONVEYOR	03/11/15	SPACER	A09-S-1.000-0.344-0.172 (chain runner) (need 13 more)	13
03-PRODUCT CONVEYOR	03/12/15	5624-03-151	WELDMENT - CONVEYOR SUPPORT	1
03-PRODUCT CONVEYOR	03/12/15	SPACER	A09-S-1.000-0.344-0.500	2
03-PRODUCT CONVEYOR	03/12/15	SPACER	A09-S-1.000-0.422-0.118	2
03-PRODUCT CONVEYOR	03/12/15	SPACER	A09-S-1.000-0.422-0.945	2
03-PRODUCT CONVEYOR	03/28/15	5172-04-123	SCALE - SIDE GUIDE ADJUST	4
03-PRODUCT CONVEYOR	03/28/15	5624-03-154-2	ANGLE - O.H. GUIDE AT TRANSFER	1
03-PRODUCT CONVEYOR	03/28/15	5624-03-154-3	ANGLE - O.H. GUIDE AT TRANSFER	1
03-PRODUCT CONVEYOR	03/28/15	5624-03-155	ANGLE - SIDE GUIDE AFTER INDEX	2
03-PRODUCT CONVEYOR	03/28/15	5624-03-156-2	ANGLE - SIDE GUIDE AFTER INDEX	1
03-PRODUCT CONVEYOR	03/28/15	5624-03-156-3	ANGLE - SIDE GUIDE AFTER INDEX	1
03-PRODUCT CONVEYOR	03/28/15	5624-03-157-2	ANGLE - SIDE PLOW MOUNT	2
03-PRODUCT CONVEYOR	03/28/15	5624-03-157-3	ANGLE - SIDE PLOW MOUNT	2
03-PRODUCT CONVEYOR	03/28/15	5624-14-109	PLATE - CAPTURE POINTER	4
03-PRODUCT CONVEYOR	03/28/15	SPACER	A09-S-1.000-0.344-1.071 (guide after index)	4
03-PRODUCT CONVEYOR	03/28/15	SPACER	A09-S-0.375-0.218-0.130 (side guide)	4
03-PRODUCT CONVEYOR	03/28/15	SPACER	A09-S-0.375-0.218-0.189 (o.h. guide)	4
03-PRODUCT CONVEYOR	04/01/15	5172-04-123	SCALE - SIDE GUIDE ADJUST	16
03-PRODUCT CONVEYOR	04/01/15	5624-03-160-2	WELDMENT - SIDE GUIDE ROD PROD CONV	2
03-PRODUCT CONVEYOR	04/01/15	5624-03-160-3	WELDMENT - SIDE GUIDE ROD PROD CONV	2
03-PRODUCT CONVEYOR	04/01/15	5624-03-165-2	MOUNT - SIDE GUIDE	2
03-PRODUCT CONVEYOR	04/01/15	5624-03-165-3	MOUNT - SIDE GUIDE	2
03-PRODUCT CONVEYOR	04/01/15	5624-20-125	POINTER	16
03-PRODUCT CONVEYOR	04/01/15	SPACER	A09-S-0.750-0.344-0.250 (side guide mount)	4
03-PRODUCT CONVEYOR	04/01/15	SPACER	A09-S-0.750-0.344-1.375 (side guide mount)	4
03-PRODUCT CONVEYOR	04/01/15	SPACER	A09-S-0.750-0.344-1.625 (side guide mount)	24
03-PRODUCT CONVEYOR	04/01/15	5624-03-168-2	PLATE - OFFSET IDLER MOUNT	1
03-PRODUCT CONVEYOR	04/01/15	5624-03-168-3	PLATE - OFFSET IDLER MOUNT	1
03-PRODUCT CONVEYOR	04/01/15	5624-03-169	SPACER - IDLER OFFSET	2
03-PRODUCT CONVEYOR	04/01/15	5624-03-170	SPACER - IDLER OFFSET MOUNT	2
03-PRODUCT CONVEYOR	04/01/15	SHAFT	M17-25-3.618-M12 (idler)	1
03-PRODUCT CONVEYOR	04/01/15	5624-03-148	LUG - MAIN PRODUCT CONV. #60 HARKESS (need one more)	1
03-PRODUCT CONVEYOR	04/01/15	100-54-145	CONNECTING LINK - #2060 HARKESS (need one more)	1
03-PRODUCT CONVEYOR	04/01/15	5624-03-171	BAR - IDLER RETURN LOWER	1
03-PRODUCT CONVEYOR	04/03/15	5624-03-177	POST - SIDE GUIDE MOUNT	8
03-PRODUCT CONVEYOR	04/03/15	5624-03-178	ANGLE - SIDE GUIDE MOUNT	6
03-PRODUCT CONVEYOR	04/03/15	5624-03-180	WELDMENT - ROUND LOWER GUIDE	4
03-PRODUCT CONVEYOR	04/03/15	5624-03-182	WELDMENT - GUIDE SQUARE LOWER	4
03-PRODUCT CONVEYOR	04/03/15	5624-03-184	WELDMENT - ROUND UPPER GUIDE	2
03-PRODUCT CONVEYOR	04/03/15	5624-03-186	WELDMENT - RECTANGLE LOWER GUIDE	4
03-PRODUCT CONVEYOR	04/03/15	5624-03-188	WELDMENT - RECTANGLE UPPER GUIDE	2
03-PRODUCT CONVEYOR	04/03/15	5624-03-190	WELDMENT - SQUARE UPPER GUIDE	2
03-PRODUCT CONVEYOR	04/03/15	5624-03-193	SPACER - SIDE GUIDE MOUNT	48
03-PRODUCT CONVEYOR	04/03/15	SPACER	A09-S-1.000-0.344-0.250 (guide mount in frame)	16
03-PRODUCT CONVEYOR	04/06/15	5624-03-179-2	ANGLE - SIDE GUIDE MOUNT	1
03-PRODUCT CONVEYOR	04/06/15	5624-03-179-3	ANGLE - SIDE GUIDE MOUNT	1
03-PRODUCT CONVEYOR	04/08/15	5604-03-195	UNIVERSAL FIBER OPTIC MOUNT	2
03-PRODUCT CONVEYOR	04/09/15	5167-17-162	ANGLE-PRODUCT DOUN P.E. MOUNT	1
03-PRODUCT CONVEYOR	04/09/15	5624-03-196	PLATE - BEARING MOUNT	2
03-PRODUCT CONVEYOR	04/16/15	5624-03-197	UPPER GUIDE MOUNT RECTANGLE	6
03-PRODUCT CONVEYOR	04/16/15	5624-03-198	UPPER GUIDE MOUNT ROUND	6
03-PRODUCT CONVEYOR	04/16/15	5624-03-199	UPPER GUDIE MOUNT SQUARE	6
03-PRODUCT CONVEYOR	05/14/15	5624-03-206-2	WELDMENT - STAKING SIDE GUIDES	1
03-PRODUCT CONVEYOR	05/14/15	5624-03-206-3	WELDMENT - STAKING SIDE GUIDES	1
03-PRODUCT CONVEYOR	05/28/15	5624-03-207-2	ANGLE - SHIFTED MOUNT	1

Fabrication Parts

SECTION	DATE	PART NO.	DESCRIPTION	QTY
03-PRODUCT CONVEYOR	05/28/15	5624-03-207-3	ANGLE - SHIFTED MOUNT	1
03-PRODUCT CONVEYOR	06/24/15	5624-03-209	PLATE - SIDE GUIDE AFTER INDEX MOUNT	2
03-PRODUCT CONVEYOR	06/24/15	5624-03-210	BAR - OVERHEAD LIFT MOUNT	1
03-PRODUCT CONVEYOR	06/24/15	SPACER	M10-S-1.000-M8-1.071-M8 (overhead mount)	4
03-PRODUCT CONVEYOR	06/24/15	SPACER	A09-S-1.000-0.409-0.120 (overhead slide @ bolt)	4
03-PRODUCT CONVEYOR	07/02/15	5624-03-211	PRODUCT CONVEYOR LUG BACKSTOP	1
04-SLEEVE TRANSFER	**REF**	**5624-04-001**	**ASSEMBLY - SLEEVE TRANSFER**	**REF**
04-SLEEVE TRANSFER	**REF**	**5624-04-002**	**ASSEMBLY - CARTON TRANSFER CHAIN ASSY**	**REF**
04-SLEEVE TRANSFER	**REF**	**5624-04-004**	**ASSEMBLY - TRANSFER CHAIN ADJUST VERT. & HORIZ.(RIGHT)**	**REF**
04-SLEEVE TRANSFER	**REF**	**5624-04-005**	**ASSEMBLY - TRANSFER CHAIN ADJUST VERT. & HORIZ. (LEFT)**	**REF**
04-SLEEVE TRANSFER	**REF**	**5624-04-006**	**ASSEMBLY - SLEEVE TRANSFER**	**REF**
04-SLEEVE TRANSFER	**REF**	**5624-04-007**	**ASSEMBLY - PHOTO EYE MOUNT CARTON CONFIRM**	**REF**
04-SLEEVE TRANSFER	**REF**	**830-04-010**	**ASSEMBLY - ADJUSTABLE IDLER**	**REF**
04-SLEEVE TRANSFER	**REF**	**830-04-008**	**ASSEMBLY - INA ROLLER CARRIAGE PLATE**	**REF**
04-SLEEVE TRANSFER	**REF**	**830-04-006**	**ASSEMBLY - INA ROLLER CARRIAGE PLATE**	**REF**
04-SLEEVE TRANSFER	**12/10/14**	**5424-04-101-2**	**ASSEMBLY - TRANSFER CHAIN, HARKESS 9"**	**1**
04-SLEEVE TRANSFER	**12/10/14**	**5426-04-101-3**	**ASSEMBLY - TRANSFER CHAIN, HARKESS 9"**	**1**
04-SLEEVE TRANSFER	12/10/14	100-16-108	HARKNESS CONN. LINK	22
04-SLEEVE TRANSFER	12/10/14	100-20-103	CAP - GEARBOX END	4
04-SLEEVE TRANSFER	12/10/14	100-38-102	SPINDLE - SIZE 52 ROLLER	32
04-SLEEVE TRANSFER	12/10/14	4525-0526	IDLER, #40-18 TOOTHLESS	2
04-SLEEVE TRANSFER	12/10/14	5178-04-108	SLEEVE - IDLE LUBE	2
04-SLEEVE TRANSFER	12/10/14	5178-04-139	PLATE - SIKO MOUNT	2
04-SLEEVE TRANSFER	12/10/14	5178-04-149	BRACKET - SUPPORT RAIL	8
04-SLEEVE TRANSFER	12/10/14	5267-04-113-2	RAIL - CHAIN RETURN	1
04-SLEEVE TRANSFER	12/10/14	5267-04-113-3	RAIL - CHAIN RETURN	1
04-SLEEVE TRANSFER	12/10/14	5267-04-114	RAIL - TOP NOSE	2
04-SLEEVE TRANSFER	12/10/14	5319-04-104	SHAFT - TRANSFER VERTICAL @ TOLOMATIC	2
04-SLEEVE TRANSFER	12/10/14	5398-04-103	HARKESS LUG - SQUARING CHAIN	22
04-SLEEVE TRANSFER	12/10/14	5598-04-101	RAIL - OVERHEAD HOLD	2
04-SLEEVE TRANSFER	12/10/14	5598-04-102	PLATE - SLEEVE RUNNER MOUNT	2
04-SLEEVE TRANSFER	12/10/14	5598-11-113	PLATE - SIKO MOUNT	2
04-SLEEVE TRANSFER	12/10/14	5624-04-100-2	RAIL - TOP CHAIN	1
04-SLEEVE TRANSFER	12/10/14	5624-04-100-3	RAIL - TOP CHAIN	1
04-SLEEVE TRANSFER	12/10/14	5624-04-101-2	PANEL - CARTON TRANSFER	1
04-SLEEVE TRANSFER	12/10/14	5624-04-101-3	PANEL - CARTON TRANSFER	1
04-SLEEVE TRANSFER	12/10/14	5624-04-104-2	WELDMENT - CARTON RUNNER	1
04-SLEEVE TRANSFER	12/10/14	5624-04-104-3	WELDMENT - CARTON RUNNER	1
04-SLEEVE TRANSFER	12/10/14	5624-04-105-2	PLATE - HARKESS LUG SUPPORT	1
04-SLEEVE TRANSFER	12/10/14	5624-04-105-3	PLATE - HARKESS LUG SUPPORT	1
04-SLEEVE TRANSFER	12/10/14	5624-04-106	SHAFT - TRANSFER HORIZONTAL @ TOLOMATIC	2
04-SLEEVE TRANSFER	12/10/14	5624-04-107	SPROCKET - CARTON TRANS DRIVE	2
04-SLEEVE TRANSFER	12/10/14	5624-04-108	IDLER SPINDLE	2
04-SLEEVE TRANSFER	12/10/14	5624-04-109	SCREW SHAFT - HORIZONTAL ADJUST	2
04-SLEEVE TRANSFER	12/10/14	5624-04-110	SCREW SHAFT - HORIZONTAL ADJUST @ HANDLE	2
04-SLEEVE TRANSFER	12/10/14	5624-04-111	BLOCK - VERT + HORIZ ADJUSTMENT	4
04-SLEEVE TRANSFER	12/10/14	5624-04-112	RAIL - SLEEVE TRANS VERT SUPPORT	4
04-SLEEVE TRANSFER	12/10/14	5624-04-113	BAR - GEARBOX MOUNT	2
04-SLEEVE TRANSFER	12/10/14	830-04-100	PLATE - INA BEARING MOUNT	4
04-SLEEVE TRANSFER	12/10/14	830-04-102	CHANNEL - TRASFER CARRIAGE TIE	2
04-SLEEVE TRANSFER	12/10/14	830-04-105	WELDMENT - TRANSFER VERTICAL SUPPORT	2

Fabrication Parts

SECTION	DATE	PART NO.	DESCRIPTION	QTY
04-SLEEVE TRANSFER	12/10/14	830-04-107	PLATE - CLAMP COLLAR MOUNTNG PLATE	2
04-SLEEVE TRANSFER	12/10/14	830-04-108	SCREW SHAFT - VERTICAL ADJUST	2
04-SLEEVE TRANSFER	12/10/14	830-04-109	SCREW SHAFT - VERTICAL ADJUST @ HANDLE	2
04-SLEEVE TRANSFER	12/10/14	830-04-110	SPROCKET - FLIGHT PANEL ADJUST	8
04-SLEEVE TRANSFER	12/10/14	830-04-117	PLATE - CHAIN IDLER SLIDE PLATE	2
04-SLEEVE TRANSFER	12/10/14	830-04-118	IDLER SPINDLE - VERTICAL ADJ CHAIN	2
04-SLEEVE TRANSFER	12/10/14	830-04-119	IDLER - VERTICAL ADJ CHAIN	2
04-SLEEVE TRANSFER	12/10/14	830-04-121	BOLT - IDLER LUBE	2
04-SLEEVE TRANSFER	12/10/14	830-04-122	STUB - IDLE SPROCKET	2
04-SLEEVE TRANSFER	12/10/14	830-04-123	SPROCKET - TRANSFER IDLE	2
04-SLEEVE TRANSFER	12/10/14	830-04-124	PLATE - IDLER CAPTURE	2
04-SLEEVE TRANSFER	12/10/14	830-04-126	BAR - TAKEUP MOUNT	2
04-SLEEVE TRANSFER	12/10/14	830-04-127	SCREW - TRANSFER TAKEUP	2
04-SLEEVE TRANSFER	12/10/14	830-04-128-2	BRACKET - TRANSFER PANEL	2
04-SLEEVE TRANSFER	12/10/14	830-04-128-3	BRACKET - TRANSFER PANEL	2
04-SLEEVE TRANSFER	12/10/14	830-04-133	BRACKET - IDLER TENSION	2
04-SLEEVE TRANSFER	12/10/14	830-04-135	PLATE - HARKES IDLER	2
04-SLEEVE TRANSFER	12/10/14	830-11-113	BUSHING - SPRING END	4
04-SLEEVE TRANSFER	12/10/14	SPACER	A11-S-0.984-0.343-0.319-2-XX (idler runners)	4
04-SLEEVE TRANSFER	12/10/14	SPACER	A09-S-0.500-0.281-0.438 (siko plate)	4
04-SLEEVE TRANSFER	12/10/14	SPACER	A09-S-0.500-0.281-0.938 (clamp plate)	4
04-SLEEVE TRANSFER	12/10/14	SPACER	A09-S-0.500-0.281-0.984 (decline runner)	4
04-SLEEVE TRANSFER	12/10/14	SPACER	A09-S-0.625-0.265-0.125 (overhead rail)	6
04-SLEEVE TRANSFER	12/10/14	SPACER	A09-S-0.750-0.265-0.188 (harkes support)	4
04-SLEEVE TRANSFER	12/10/14	SPACER	A09-S-0.750-0.265-0.250 (adj block mount)	24
04-SLEEVE TRANSFER	12/10/14	SPACER	A09-S-0.750-0.281-0.250 (chain runner)	16
04-SLEEVE TRANSFER	12/10/14	SPACER	A09-S-0.750-0.281-0.446 (discharge sleeve runner)	4
04-SLEEVE TRANSFER	12/10/14	SPACER	A09-S-0.750-0.281-0.807 (gbox mount)	8
04-SLEEVE TRANSFER	12/10/14	SPACER	A09-S-0.750-0.344-0.250 (vert ina track)	8
04-SLEEVE TRANSFER	12/10/14	SPACER	A09-S-1.000-0.422-0.250 (bracket + bearing mount)	20
04-SLEEVE TRANSFER	12/10/14	SPACER	A09-S-1.000-0.422-0.500 (bearing mount)	4
04-SLEEVE TRANSFER	12/10/14	SPACER	A09-S-1.125-0.265-0.120 (acme shaft capt.)	8
04-SLEEVE TRANSFER	12/10/14	SPACER	A09-S-1.375-0.344-0.179 (idler capt)	4
04-SLEEVE TRANSFER	12/10/14	SPACER	A11-S-0.984-0.792-0.405-2-XX (sprocket mount)	2
04-SLEEVE TRANSFER	12/10/14	SPACER	M10-S-1.000-M8-1.375-M8 (harkess runner)	6
04-SLEEVE TRANSFER	03/02/15	SPACER	A09-S-0.750-0.265-0.188 (harkes support)	4
04-SLEEVE TRANSFER	03/02/15	5624-04-114	RAIL - TRANSFER SUPPORT	4
04-SLEEVE TRANSFER	03/02/15	SPACER	A09-S-0.750-0.344-0.195 (INA support)	8
04-SLEEVE TRANSFER	04/09/15	5624-04-115	BAR-PE. MOUNT	1
04-SLEEVE TRANSFER	04/09/15	5624-04-116	PE. MOUNT CARTON CONFIRM	1
05-ROTARY FEEDER	**REF**	**5580-05-001**	**ASSEMBLY - ROTARY FEEDER**	**REF**
05-ROTARY FEEDER	**REF**	**670-02-002**	**SHORT IDLER ASSEMBLY**	**REF**
05-ROTARY FEEDER	**REF**	**670-02-003**	**LONG IDLER ASSEMBLY**	**REF**
05-ROTARY FEEDER	11/25/14	5167-06-105	SLEEVE - INSIDE BELT INSIDE SPACER	2
05-ROTARY FEEDER	11/25/14	5167-06-108	SLEEVE - INSIDE BELT OUTSIDE SPACER	2
05-ROTARY FEEDER	11/25/14	5167-06-109	SLEEVE - OUTSIDE BELT INSIDE SPACER	1
05-ROTARY FEEDER	11/25/14	5167-06-110	SLEEVE - OUTSIDE BELT OUTSIDE SPACER	1
05-ROTARY FEEDER	11/25/14	5178-05-101	HUB - FEEDER ARM ADJUST	3
05-ROTARY FEEDER	11/25/14	5178-05-102	PULLEY - CENTER	1
05-ROTARY FEEDER	11/25/14	5178-05-103	HUB - FEEDER PULLEY MOUNT	1

Fabrication Parts

SECTION	DATE	PART NO.	DESCRIPTION	QTY
05-ROTARY FEEDER	11/25/14	5178-05-109	STEM - VACUUM CUP	9
05-ROTARY FEEDER	11/25/14	5178-05-112	BAR - FIXED IDLER MOUNT	2
05-ROTARY FEEDER	11/25/14	5228-05-122	ARM- VACUUM CUP MOUNT	3
05-ROTARY FEEDER	11/25/14	5267-05-103	SHAFT - MAIN CENTER MOUNT	1
05-ROTARY FEEDER	11/25/14	5267-05-108	ORIFICE - VACUUM CUP	9
05-ROTARY FEEDER	11/25/14	5304-05-100	PULLEY - FEEDER DRIVEN	1
05-ROTARY FEEDER	11/25/14	5304-05-101	PANEL - REAR SIDE 3HD - 8" FEEDER	1
05-ROTARY FEEDER	11/25/14	5304-05-102	PANEL - FRONT SIDE 3HD - 8" FEEDER	1
05-ROTARY FEEDER	11/25/14	5304-05-103	MANIFOLD - VACUUM	1
05-ROTARY FEEDER	11/25/14	5304-05-104	ANGLE - BELT GUARD 3HD 8"	1
05-ROTARY FEEDER	11/25/14	5304-05-105	PLATE - FEEDER GUARD NUTPLATE	1
05-ROTARY FEEDER	11/25/14	5304-05-106	ANGLE - BELT GUARD 3HD	1
05-ROTARY FEEDER	11/25/14	5304-05-107	ANGLE - BELT GUARD 3HD	1
05-ROTARY FEEDER	11/25/14	670-02-101	HOUSING - CENTER BEARING	1
05-ROTARY FEEDER	11/25/14	670-02-102	HOUSING - ARM BEARING	3
05-ROTARY FEEDER	11/25/14	670-02-103	NUTPLATE - CENTER BEARING	1
05-ROTARY FEEDER	11/25/14	670-02-107	BOLT - LUBE	5
05-ROTARY FEEDER	11/25/14	670-02-108	NUT PLATE - IDLER	3
05-ROTARY FEEDER	11/25/14	670-02-109	WELDMENT - LONG IDLER	1
05-ROTARY FEEDER	11/25/14	670-02-110	WELDMENT - SHORT IDLER	2
05-ROTARY FEEDER	11/25/14	670-02-112	RETAINER - CENTER BEARING	1
05-ROTARY FEEDER	11/25/14	670-05-101	RETAINER - FEED ARM BEARING	3
05-ROTARY FEEDER	11/25/14	670-05-102	RETAINER - ROTARY FITTING	3
05-ROTARY FEEDER	11/25/14	670-06-101	MOUNT - VACUUM STEM	9
05-ROTARY FEEDER	11/25/14	670-06-102	CLAMP - VACUUM STEM MOUNT	18
05-ROTARY FEEDER	11/25/14	670-06-103	RETAINER - CARTON SPRING	9
05-ROTARY FEEDER	11/25/14	670-06-105	WELDMENT - VACUUM STEM CLAMP MOUNT	9
05-ROTARY FEEDER	11/25/14	830-05-026	ASSEMBLY - FEEDER PULLEY HUB 3HD	1
05-ROTARY FEEDER	11/25/14	830-05-116	PLATE - VACUUM MANIFOLD ADJUST	1
05-ROTARY FEEDER	11/25/14	830-05-129	HUB - FEEDER DRIVEN PULLEY	1
05-ROTARY FEEDER	11/25/14	SPACER	A09-D-0.500-0.266-0.688 (STEM MOUNT CLAMP)	9
05-ROTARY FEEDER	11/25/14	SPACER	A09-S-0.750-0.406-0.157 (FIXED IDLER)	2
05-ROTARY FEEDER	11/25/14	SPACER	M10-S-1.000-M10-2.125-M10 (DRIVE PULLEY)	3
05-ROTARY FEEDER	11/25/14	SPACER	A09-S-0.750-0.281-0.250 (GUARD MOUNT)	6
05-ROTARY FEEDER	03/09/15	5580-06-100	PLATE -VACUUM ADJUST MOUNT	1
06-FEEDER MOUNT	**REF**	**5624-06-001**	**ASSEMBLY - FEEDER MOUNT**	**REF**
06-FEEDER MOUNT	**REF**	**5624-06-002**	**ASSEMBLY - FEEDER MOUNT**	**REF**
06-FEEDER MOUNT	**REF**	**100-38-002**	**ASSEMBLY - SIZE 32 WASHDOWN INA ROLLER**	**REF**
06-FEEDER MOUNT	12/03/14	100-38-101	INA ROLLER SPACER/SPINDLE (SIZE 32)	12
06-FEEDER MOUNT	12/03/14	5579-06-100	TRACK, HOPPER SIDE GUIDE ADJ. (32)	2
06-FEEDER MOUNT	12/03/14	830-06-100	BAR - ADJ GEARBOX MOUNT	1
06-FEEDER MOUNT	12/03/14	830-06-101	COUPLING - FEEDER ADJUST	1
06-FEEDER MOUNT	12/03/14	830-06-102	SHAFT - VERT. ADJUST	1
06-FEEDER MOUNT	12/03/14	830-06-104	BUSHING - FEEDER VERT ADJ. SHAFT	1
06-FEEDER MOUNT	12/03/14	830-06-105	PLATE - SIKO BACKPLATE	1
06-FEEDER MOUNT	12/03/14	830-06-106	BAR - CLAMP & SIKO PLATE MOUNT	1
06-FEEDER MOUNT	12/03/14	830-06-107	PLATE - FEEDER MOUNT MAIN	1
06-FEEDER MOUNT	12/03/14	830-06-108	MOUNT - FEEDER CENTER SHAFT	1
06-FEEDER MOUNT	12/03/14	830-06-109	BLOCK - INA BEARING / BACKPLATE MOUNT	2
06-FEEDER MOUNT	12/03/14	830-06-110	BLOCK - TOP INA BEARING / BACKPLATE MOUNT	1

Fabrication Parts

SECTION	DATE	PART NO.	DESCRIPTION	QTY
06-FEEDER MOUNT	12/03/14	830-06-113-2	ANGLE - UPPER FEEDER MOUNT	1
06-FEEDER MOUNT	12/03/14	830-06-113-3	ANGLE - UPPER FEEDER MOUNT	1
06-FEEDER MOUNT	12/03/14	830-06-116	BAR - MECH DRIVE G-BOX MOUNT	1
06-FEEDER MOUNT	12/03/14	830-06-117	WELDMENT - GBOX MOUNT	1
06-FEEDER MOUNT	12/03/14	830-06-118	SHAFT - HORIZ DRIVE	1
06-FEEDER MOUNT	12/03/14	830-06-119	BLOCK - BEARING MOUNT	1
06-FEEDER MOUNT	12/03/14	830-06-120	SHAFT - UPPER VERT. DRIVE	1
06-FEEDER MOUNT	12/03/14	SPACER	A09-S-0.500-0.218-0.449 (clamp mount)	2
06-FEEDER MOUNT	12/03/14	SPACER	A09-S-0.750-0.344-0.500 (gbox mount)	4
06-FEEDER MOUNT	12/03/14	SPACER	A09-S-1.000-0.344-0.466 (track mount)	8
06-FEEDER MOUNT	03/09/15	5178-06-112	PLATE VACUUM ADJUST KNOB	1
06-FEEDER MOUNT	03/09/15	5178-06-124	BAR - VACUUM ADJUST	1
06-FEEDER MOUNT	03/09/15	SPACER	A09-S0.625-0.265-0.344	1
06-FEEDER MOUNT	03/09/15	SPACER	A09-S0.625-0.265-0.518	1
06-FEEDER MOUNT	03/24/15	100-22-140	HANDWHEEL - Ø 4" SS (12mm bore)	1
06-FEEDER MOUNT	04/30/15	5624-06-100	PLATE - VACUUM ADJUST MOUNT	1
07-SLEEVE MAGAZINE	**REF**	**5624-07-001**	**ASSEMBLY - SLEEVE MAGAZINE**	**REF**
07-SLEEVE MAGAZINE	**REF**	**5624-07-002**	**ASSEMBLY - MAGAZINE GATE**	**REF**
07-SLEEVE MAGAZINE	**REF**	**5549-08-007**	**ASSEMBLY - HOPPER ADVANCE SENSOR MOUNT**	
07-SLEEVE MAGAZINE	**REF**	**5402-07-002**	**ASSEMBLY - MAGAZINE BASE**	**REF**
07-SLEEVE MAGAZINE	**REF**	**5178-07-005**	**ASSEMBLY - MAGAZINE STRONGBACK**	**REF**
07-SLEEVE MAGAZINE	**REF**	**5178-07-004**	**ASSEMBLY - GUIDE RAIL MOUNT**	**REF**
07-SLEEVE MAGAZINE	12/06/14	41-42	BLADE - MAGAZINE	8
07-SLEEVE MAGAZINE	12/06/14	4677-2107	BUSHING - MAGAZINE SIDE GUIDE SCREW SHAFT	2
07-SLEEVE MAGAZINE	12/06/14	4677-2125	SPROCKET - MAGAZINE SIDE GUIDE ADJUST	1
07-SLEEVE MAGAZINE	12/06/14	4677-2126	WELDMENT - DOUBLE SPROCKET	1
07-SLEEVE MAGAZINE	12/06/14	4677-2152	RAIL - MAGAZINE CHAIN NOSE	2
07-SLEEVE MAGAZINE	12/06/14	4677-2154	AXLE - MAGAZINE CHAIN IDLER	2
07-SLEEVE MAGAZINE	12/06/14	4677-2155-2	WELDMENT - CARTON RUNNER (AS SHOWN)	2
07-SLEEVE MAGAZINE	12/06/14	5060-09-106	CHANNEL - MAGAZINE SIDE GUIDE MOUNT DOUBLE	2
07-SLEEVE MAGAZINE	12/06/14	5060-09-108	SHAFT - MAGAZINE SIDE ADJUST	2
07-SLEEVE MAGAZINE	12/06/14	5060-09-118-2	MOUNT - MAGAZINE PLATE LOWER MOUNT (AS SHOWN)	1
07-SLEEVE MAGAZINE	12/06/14	5060-09-118-3	MOUNT - MAGAZINE PLATE LOWER MOUNT (OPPOSITE)	1
07-SLEEVE MAGAZINE	12/06/14	5167-08-123	PLATE - HOPPER TABBING TOP	4
07-SLEEVE MAGAZINE	12/06/14	5172-08-100	SPACER - SIDE GUIDE MOUNT LONG	8
07-SLEEVE MAGAZINE	12/06/14	5172-08-112	GUIDE - MAGAZINE CHAIN ADJUST	2
07-SLEEVE MAGAZINE	12/06/14	5172-08-117	SPROCKET - SLIDING	2
07-SLEEVE MAGAZINE	12/06/14	5172-08-118	KEY - SLIDING	2
07-SLEEVE MAGAZINE	12/06/14	5172-08-119	PLATE - SLIDING SPROCKET CAPTURE	2
07-SLEEVE MAGAZINE	12/06/14	5172-08-120	GUIDE - MAGAZINE CHAIN	8
07-SLEEVE MAGAZINE	12/06/14	5172-08-121	GUIDE BUSHING - MAGAZINE SIDE GUIDE ADJUST	2
07-SLEEVE MAGAZINE	12/06/14	5172-08-122	NUTPLATE - MAGAZINE GUIDE BUSHING	2
07-SLEEVE MAGAZINE	12/06/14	5172-08-125	COLLAR - RUNNER PANEL MOUNT	8
07-SLEEVE MAGAZINE	12/06/14	5172-08-126	BAR - MAGAZINE GUIDE NUTPLATE	2
07-SLEEVE MAGAZINE	12/06/14	5172-08-127	BLOCK - MAGAZINE SIDE GUIDE	2
07-SLEEVE MAGAZINE	12/06/14	5172-08-129	CAP - SHAFT	1
07-SLEEVE MAGAZINE	12/06/14	5178-07-101-2	PANEL - MAGAZINE SIDE (AS SHOWN)	1
07-SLEEVE MAGAZINE	12/06/14	5178-07-101-3	PANEL - MAGAZINE SIDE (OPPOSITE)	1
07-SLEEVE MAGAZINE	12/06/14	5178-07-102	STRONGBACK - MAGAZINE	2
07-SLEEVE MAGAZINE	12/06/14	5178-07-103	RUNNER - MAGAZINE	2

Fabrication Parts

SECTION	DATE	PART NO.	DESCRIPTION	QTY
07-SLEEVE MAGAZINE	12/06/14	5178-07-109	CHANNEL - SIDE GUIDE	1
07-SLEEVE MAGAZINE	12/06/14	5178-07-113	GUIDE - ADJUSTMENT CHAIN	2
07-SLEEVE MAGAZINE	12/06/14	5178-07-115	WELDMENT - MAGAZINE STRONGBACK	2
07-SLEEVE MAGAZINE	12/06/14	5267-07-116	BLOCK - MAGAZINE WEIGHT	1
07-SLEEVE MAGAZINE	12/06/14	5267-07-117	PAD - MAGAZINE PUSH BLOCK	2
07-SLEEVE MAGAZINE	12/06/14	5304-07-100	SHAFT - SIDE GUIDE ADJUST	1
07-SLEEVE MAGAZINE	12/06/14	5304-07-102	CHANNEL - MAGAZINE END CAP	1
07-SLEEVE MAGAZINE	12/06/14	5304-07-103	MOUNT - MAGAZINE GATE TOP	1
07-SLEEVE MAGAZINE	12/06/14	5304-07-110	ROLLER EDGE CARTON MAGAZINE	6
07-SLEEVE MAGAZINE	12/06/14	5402-07-102	SHAFT - MAGAZINE DRIVE	1
07-SLEEVE MAGAZINE	12/06/14	5402-07-103	BUSHING - MAGAZINE DRIVE SHAFT	2
07-SLEEVE MAGAZINE	12/06/14	5499-08-119	BLOCK - SENSOR MOUNT	1
07-SLEEVE MAGAZINE	12/06/14	5499-08-120	PLATE - SENSOR MOUNT	1
07-SLEEVE MAGAZINE	12/06/14	5499-08-121	FLAG - SENSOR	1
07-SLEEVE MAGAZINE	12/06/14	5580-07-102	WELDMENT - O.H. SHOE @ PROX	1
07-SLEEVE MAGAZINE	12/06/14	5624-07-100-2	ANGLE - FACEPLATE GUIDE	1
07-SLEEVE MAGAZINE	12/06/14	5624-07-100-3	ANGLE - FACEPLATE GUIDE	1
07-SLEEVE MAGAZINE	12/06/14	5624-07-102-2	UPRIGHT - MAGAZINE GATE	1
07-SLEEVE MAGAZINE	12/06/14	5624-07-102-3	UPRIGHT - MAGAZINE GATE	1
07-SLEEVE MAGAZINE	12/06/14	5624-07-103-2	WELDMENT - GATE GUIDE	4
07-SLEEVE MAGAZINE	12/06/14	5624-07-103-3	WELDMENT - GATE GUIDE	4
07-SLEEVE MAGAZINE	12/06/14	NUTPLATE	(M24-S-4.000-4.500-0.500-0.250-M6) CARTON RUNNER	2
07-SLEEVE MAGAZINE	12/06/14	SHAFT	(M16-20-10.000-M8) SIDE GUIDE	4
07-SLEEVE MAGAZINE	12/06/14	SHAFT	(M17-25-22.000-M8) MAGAZINE SIDE PANEL	5
07-SLEEVE MAGAZINE	12/06/14	SPACER	(A09-D-1.250-0.790-0.250) ADJUST SHAFT	1
07-SLEEVE MAGAZINE	12/06/14	SPACER	(A09-D-1.500-0.992-0.125) SLIDING SPROCKET	2
07-SLEEVE MAGAZINE	12/06/14	SPACER	(A09-D-1.500-0.992-0.363) SLIDING SPROCKET	2
07-SLEEVE MAGAZINE	12/06/14	SPACER	(A09-D-2.000-0.755-0.240) ADJUST SPROCKET	2
07-SLEEVE MAGAZINE	12/06/14	SPACER	(A09-S-1.000-0.344-0.500) GEARMOTOR PLATE	4
07-SLEEVE MAGAZINE	12/06/14	SPACER	(A09-S-1.250-0.281-0.125) SHAFT END	4
07-SLEEVE MAGAZINE	12/06/14	SPACER	(M10-S-0.750-M8-3.000-M8) MAGAZINE UPRIGHT	8
07-SLEEVE MAGAZINE	12/06/14	SPACER	(A09-S-0.500-0.281-0.250) COLLAR & GUIDE	20
07-SLEEVE MAGAZINE	12/06/14	SPACER	(A09-S-0.625-0.265-1.125) MOTOR MOUNT	4
07-SLEEVE MAGAZINE	12/06/14	SPROCKET	(M01-S-401-18-20) SIDE GUIDE ADJUST	1
07-SLEEVE MAGAZINE	02/25/15	5167-08-123	PLATE - HOPPER TABBING TOP	8
07-SLEEVE MAGAZINE	02/25/15	5287-08-117	WELDMENT - O.H. SHOE @ HOPPER	6
07-SLEEVE MAGAZINE	02/25/15	5499-08-119	BLOCK - SENSOR MOUNT	5
07-SLEEVE MAGAZINE	02/25/15	5499-08-120	PLATE - SENSOR MOUNT	5
07-SLEEVE MAGAZINE	02/25/15	5499-08-121	FLAG - SENSOR	5
07-SLEEVE MAGAZINE	02/25/15	5580-07-102	WELDMENT - O.H. SHOE @ PROX	5
07-SLEEVE MAGAZINE	02/25/15	5624-07-101	PLATE - GATE SQUARE DOUBLE	1
07-SLEEVE MAGAZINE	02/25/15	5624-07-103-2	WELDMENT - GATE GUIDE	2
07-SLEEVE MAGAZINE	02/25/15	5624-07-103-3	WELDMENT - GATE GUIDE	2
07-SLEEVE MAGAZINE	02/25/15	5624-07-106	PLATE - GATE SQUARE SINGLE	1
07-SLEEVE MAGAZINE	02/25/15	5624-07-107	PLATE - GATE RECTANGLE DOUBLE	1
07-SLEEVE MAGAZINE	02/25/15	5624-07-108	PLATE - GATE RECTANLGE SINGLE	1
07-SLEEVE MAGAZINE	02/25/15	5624-07-109	PLATE - GATE ROUND SINGLE	1
07-SLEEVE MAGAZINE	02/25/15	5624-07-110	PLATE - GATE ROUND DOUBLE	1
07-SLEEVE MAGAZINE	03/09/15	5624-07-111	PLATE - GEARMOTOR MOUNT	1

Fabrication Parts

SECTION	DATE	PART NO.	DESCRIPTION	QTY
07-SLEEVE MAGAZINE	03/09/15	5624-07-112	ANGLE - IN OUT ADJUSTMENT	1
07-SLEEVE MAGAZINE	03/09/15	5304-08-104	NUT - HOPPER HORIZONTAL ADJUST	1
07-SLEEVE MAGAZINE	03/09/15	SPACER	A09-S-0.750-0.281-0.250 (adj angle mount)	4
07-SLEEVE MAGAZINE	03/24/15	100-22-137	HAND WHEEL - Ø4" S.S. (16mm BORE)	1
07-SLEEVE MAGAZINE	05/21/15	5624-07-115	ANGLE - HOPPER PUSH BLOCK	1
07-SLEEVE MAGAZINE	05/21/15	SPACER	M10-D-0.750-M6-0.938-M6 (chain support)	2
07-SLEEVE MAGAZINE	05/21/15	SPACER	A09-S-1.000-0.265-0.125 (chain support capt)	2
07-SLEEVE MAGAZINE	05/21/15	SPACER	M10-S-0.750-M6-1.750 only one tap needed (block stop)	1
07-SLEEVE MAGAZINE	06/01/15	5624-07-116	HOPPER BLADE	10
08-MAGAZINE MOUNT	**REF**	**5624-08-001**	**ASSEMBLY - MAGAZINE MOUNT**	**REF**
08-MAGAZINE MOUNT	**REF**	**5624-08-002**	**ASSEMBLY - ROLLER MOUNT PLATE**	**REF**
08-MAGAZINE MOUNT	12/09/14	100-02-115	COUPLING, RULAND S.S. TWO-PIECE, 1/2" X 1/2"	3
08-MAGAZINE MOUNT	12/09/14	100-38-102	SPINDLE - SIZE 52 ROLLER	16
08-MAGAZINE MOUNT	12/09/14	5178-04-143	BUSHING - HORIZONTAL ADJUST SHAFT	1
08-MAGAZINE MOUNT	12/09/14	5178-08-106	BUSHING - HOPPER ADJUST SHAFT	1
08-MAGAZINE MOUNT	12/09/14	5178-08-115	BLOCK - HOPPER ROLLER SUPPORT	4
08-MAGAZINE MOUNT	12/09/14	5178-08-118	SCREW SHAFT - HORIZONTAL ADJUST	1
08-MAGAZINE MOUNT	12/09/14	5304-08-102	PLATE - LIFTING BLOCK CLAMP PLATE	2
08-MAGAZINE MOUNT	12/09/14	5304-08-106-2	RETAINER HOPPER	2
08-MAGAZINE MOUNT	12/09/14	5304-08-106-3	RETAINER HOPPER	2
08-MAGAZINE MOUNT	12/09/14	5402-08-100	SHAFT - HOPPER VERTICAL ADJUST	1
08-MAGAZINE MOUNT	12/09/14	5402-08-101	BLOCK - VERT. ADJUST	2
08-MAGAZINE MOUNT	12/09/14	5402-08-103	RAIL - HOPPER MOUNT SUPPORT	2
08-MAGAZINE MOUNT	12/09/14	5624-08-100-2	PANEL - HOPPER MOUNT	1
08-MAGAZINE MOUNT	12/09/14	5624-08-100-3	PANEL - HOPPER MOUNT	1
08-MAGAZINE MOUNT	12/09/14	5624-08-101	BAR - HOPPER JACK MOUNT	2
08-MAGAZINE MOUNT	12/09/14	5624-08-102	PLATE - INA ROLLER MOUNT	2
08-MAGAZINE MOUNT	12/09/14	5624-08-103	BAR - LIFTING JACK MOUNT	4
08-MAGAZINE MOUNT	12/09/14	5624-08-104	SHAFT - HOPPER JACK LINK	1
08-MAGAZINE MOUNT	12/09/14	5624-08-105	CHANNEL - HOPPER MOUNT CROSS	2
08-MAGAZINE MOUNT	12/09/14	5624-08-106	PLATE - CORNER BRACE	4
08-MAGAZINE MOUNT	12/09/14	5624-08-109-2	MOUNT - CAM ROLLER	2
08-MAGAZINE MOUNT	12/09/14	5624-08-109-3	MOUNT - CAM ROLLER	2
08-MAGAZINE MOUNT	12/09/14	5624-08-110-2	WELDMENT - HOPPER MOUNT	1
08-MAGAZINE MOUNT	12/09/14	5624-08-110-3	WELDMENT - HOPPER MOUNT	1
08-MAGAZINE MOUNT	12/09/14	SPACER	A09-S-0.750-0.281-0.250 (corner brace)	8
08-MAGAZINE MOUNT	12/09/14	SPACER	A09-S-0.750-0.344-0.250 (cam roller mount)	16
08-MAGAZINE MOUNT	12/09/14	SPACER	A09-S-0.750-0.422-0.250 (adj block mount)	8
08-MAGAZINE MOUNT	12/09/14	SPACER	A09-S-1.000-0.422-0.375 (ina roller mount)	16
08-MAGAZINE MOUNT	12/09/14	SPACER	A09-S-1.000-0.790-0.060 (horiz bushing)	1
08-MAGAZINE MOUNT	12/09/14	SPACER	A09-S-1.500-0.500-0.500 (angle mount)	8
08-MAGAZINE MOUNT	03/02/15	5624-08-102	PLATE - INA ROLLER MOUNT (need 2 more 4 total)	2
08-MAGAZINE MOUNT	03/09/15	5624-08-112	BAR - INA TRACK SPACER	2
08-MAGAZINE MOUNT	03/24/15	100-22-137	HAND WHEEL - Ø4" S.S. (16mm BORE)	1
09-OH CONVEYOR	**REF**	**5624-09-001**	**ASSEMBLY - OVERHEAD CONVEYOR**	**REF**
09-OH CONVEYOR	**REF**	**5624-09-002**	**ASSEMBLY - O.H. CONVEYOR LIFT**	**REF**
09-OH CONVEYOR	**REF**	**5624-09-003**	**ASSEMBLY - OVERHEAD CONVEYOR 7" WIDE**	**REF**
09-OH CONVEYOR	**REF**	**5624-09-004**	**ASSEMBLY - OH CONVEYOR DRIVE COMPONENTS**	**REF**
09-OH CONVEYOR	**REF**	**5580-09-004**	**VERTICAL OVERHEAD LIFT ASSEMBLY**	**REF**
09-OH CONVEYOR	**REF**	**5304-09-004**	**ASSEMBLY - TAKE-UP SPROCKET**	**REF**

Fabrication Parts

SECTION	DATE	PART NO.	DESCRIPTION	QTY
09-OH CONVEYOR	**REF**	**830-09-008**	**INA ROLLER CARRIER ASSEMBLY**	**REF**
09-OH CONVEYOR	**REF**	**830-09-009**	**VERTICAL OVERHEAD LIFT ASSEMBLY**	**REF**
09-OH CONVEYOR	**REF**	**830-09-011**	**ASSEMBLY - CONVEYOR TAKEUP**	**REF**
09-OH CONVEYOR	12/11/14	7710783	BRACKET - IDLER ADJUST	1
09-OH CONVEYOR	12/11/14	100-02-193	COUPLING - RULAND 2 PIECE 25mm SS	1
09-OH CONVEYOR	12/11/14	100-05-103	WELDMENT - #60-13T IDLER (WASHDOWN)	1
09-OH CONVEYOR	12/11/14	100-38-102	SPINDLE - SIZE 52 ROLLER	8
09-OH CONVEYOR	12/11/14	15AT694G	BOLT - LUBE	1
09-OH CONVEYOR	12/11/14	5076-10-106	BLOCK - PROD. CONV T.U. SCREW	2
09-OH CONVEYOR	12/11/14	5154-23-154	BLOCK - CONVEYOR IDLER SLIDER	2
09-OH CONVEYOR	12/11/14	5178-09-102	RAIL - OVERHEAD CHAIN LEADIN	2
09-OH CONVEYOR	12/11/14	5178-09-106	MOUNT - LEADIN RAIL	2
09-OH CONVEYOR	12/11/14	5178-09-107	HUB - DRIVE SPROCKET	1
09-OH CONVEYOR	12/11/14	5178-09-108	SPROCKET - IDLE	2
09-OH CONVEYOR	12/11/14	5178-09-134-2	WELDMENT - SIDE FLAP PLOW	1
09-OH CONVEYOR	12/11/14	5178-09-134-3	WELDMENT - SIDE FLAP PLOW	1
09-OH CONVEYOR	12/11/14	5178-18-109	BAR - LIGHT MOUNT	4
09-OH CONVEYOR	12/11/14	5267-09-106	RAIL - OVERHEAD CHAIN	2
09-OH CONVEYOR	12/11/14	5267-09-107	RAIL - OVERHEAD CHAIN RETURN	2
09-OH CONVEYOR	12/11/14	5267-09-127	BLOCK - O.H. CONV. VERT. ADJUST	2
09-OH CONVEYOR	12/11/14	5267-09-128	PLATE - LIFTING BLOCK NUTPLATE	2
09-OH CONVEYOR	12/11/14	5386-12-103	NUTPLATE - SIDE ADJ BEARING	1
09-OH CONVEYOR	12/11/14	5398-09-102	BAR - JACK MOUNT	3
09-OH CONVEYOR	12/11/14	5398-09-103	RAIL - O.H. CONVEYOR SUPPORT	2
09-OH CONVEYOR	12/11/14	5398-09-106	SHAFT - O.H. LIFT @ MOTOR	1
09-OH CONVEYOR	12/11/14	5398-09-110	BAR - O.H. RAIL STIFFENER	2
09-OH CONVEYOR	12/11/14	5398-09-113	ANGLE - BEARING SUPPORT	1
09-OH CONVEYOR	12/11/14	5398-09-114	BAR - JACK MOUNT	1
09-OH CONVEYOR	12/11/14	5398-09-115	BAR - IDLER MOUNT	1
09-OH CONVEYOR	12/11/14	5402-09-100	BAR - OVERHEAD CROSS	18
09-OH CONVEYOR	12/11/14	5580-09-100	WELDMENT - OVERHEAD LIFT DOWNSTREAM	1
09-OH CONVEYOR	12/11/14	5580-09-107	COUPLING END Ø3/4"	2
09-OH CONVEYOR	12/11/14	5580-09-108	COUPLING END Ø1/2"	2
09-OH CONVEYOR	12/11/14	5598-09-114	BAR - JACK MOUNT	1
09-OH CONVEYOR	12/11/14	5598-09-116	O/H ENCODER MOUNT	1
09-OH CONVEYOR	12/11/14	820-0154	SPACER, BEARING LUBE	1
09-OH CONVEYOR	12/11/14	830-09-110	BAR - MOTOR MOUNT	2
09-OH CONVEYOR	12/11/14	830-09-111	WELDMENT - CARRIAGE MOUNT	2
09-OH CONVEYOR	12/11/14	830-09-114-2	CHANNEL - O.H. COVNEYOR MOUNT DOWNSTREAM	1
09-OH CONVEYOR	12/11/14	830-09-114-3	CHANNEL - O.H. COVNEYOR MOUNT DOWNSTREAM	1
09-OH CONVEYOR	12/11/14	830-09-115	PLATE - ROLLERS MOUNT	2
09-OH CONVEYOR	12/11/14	830-09-116-2	CHANNEL - O.H. CONVEYOR MOUNT UPSTREAM	1
09-OH CONVEYOR	12/11/14	830-09-116-3	CHANNEL - O.H. CONVEYOR MOUNT UPSTREAM	1
09-OH CONVEYOR	12/11/14	830-09-118-2	ANGLE - LOWER LIMIT PROX MOUNT	1
09-OH CONVEYOR	12/11/14	830-09-118-3	ANGLE - LOWER LIMIT PROX MOUNT	1
09-OH CONVEYOR	12/11/14	830-09-119	WELDMENT - OVERHEAD LIFT UPSTREAM	1
09-OH CONVEYOR	12/11/14	830-09-124	BLOCK - TAKEUP	2
09-OH CONVEYOR	12/11/14	830-09-125	BUSHING - SPRING END	4
09-OH CONVEYOR	12/11/14	830-09-126	SHAFT - T.U. ADJUSTER ALL THREAD	2
09-OH CONVEYOR	12/11/14	NUTPLATE	M24-S-2.000-3.000-1.000-0.375-M10 (o.h. rail mount)	2

Fabrication Parts

SECTION	DATE	PART NO.	DESCRIPTION	QTY
09-OH CONVEYOR	12/11/14	SHAFT	A21-0.750-61.000-1.000-1.000 (upper cross)	1
09-OH CONVEYOR	12/11/14	SHAFT	M20-25-8.375	1
09-OH CONVEYOR	12/11/14	SHAFT	M16-25-0.375-M8 (idler brace)	2
09-OH CONVEYOR	12/11/14	SHAFT	M17-25-M10-7.609-M10 (idler)	1
09-OH CONVEYOR	12/11/14	SHAFT	M17-25-M12-14.391-M12 (upstream support)	1
09-OH CONVEYOR	12/11/14	SHAFT	M17-25-M12-15.891-M12 (dwnstrm support)	1
09-OH CONVEYOR	12/11/14	SHAFT	M20-25-12.750 (dirve)	1
09-OH CONVEYOR	12/11/14	SPACER	A09-S-1.000-0.344-0.625 (idler mount)	2
09-OH CONVEYOR	12/11/14	SPACER	A09-S-1.000-0.422-0.875 (gearbox)	4
09-OH CONVEYOR	12/11/14	SPACER	A09-S-1.250-0.515-1.500 (pillow block bearing)	2
09-OH CONVEYOR	12/11/14	SPACER	A09-S-1.000-0.344-0.179 (shaft capt)	1
09-OH CONVEYOR	12/11/14	SPACER	A09-S-1.000-0.344-1.000 (plow mount)	4
09-OH CONVEYOR	12/11/14	SPACER	A09-S-1.000-0.421-0.788 (o.h. motor mount)	4
09-OH CONVEYOR	12/11/14	SPACER	A09-S-1.000-0.422-0.250 (carriage mount, ina plates, gbox mnt plate, bearing mnt,)	24
09-OH CONVEYOR	12/11/14	SPACER	A09-S-1.000-0.422-0.500 (gearbox + bearing mount)	8
09-OH CONVEYOR	12/11/14	SPACER	A09-S-1.000-0.422-1.375 (under jack mount)	8
09-OH CONVEYOR	12/11/14	SPACER	A09-S-1.500-0.422-0.250 (o.h. support rail)	10
09-OH CONVEYOR	12/11/14	SPACER	M10-S-1.000-M8-2.250-M8 (encoder)	1
09-OH CONVEYOR	12/11/14	SPACER	M10-S-1.250-M10-72.380-M10 (o.h. brace)	1
09-OH CONVEYOR	12/11/14	SPROCKET	A08-S-0060-20-H	1
09-OH CONVEYOR	12/11/14	SPROCKET	M01-S-601-20-25 (o.h. driven)	1
09-OH CONVEYOR	12/11/14	SPROCKET	M08-S-0060-20-S	1
09-OH CONVEYOR	12/11/14	SPROCKET	M01-S-601-12-25 (o.h. drive)	1
09-OH CONVEYOR	03/03/15	5624-09-101	PANEL - OVERHEAD CONVEYOR	2
09-OH CONVEYOR	03/03/15	5624-09-103	BAR - IDLER TAKEUP	2
09-OH CONVEYOR	03/03/15	5624-09-104	SHAFT - TUCK DRIVE	1
09-OH CONVEYOR	03/03/15	5624-09-105	PLATE - BRG MOUNT NUTPLATE	4
09-OH CONVEYOR	03/03/15	5624-09-106	HUB - TUCK DISK	2
09-OH CONVEYOR	03/03/15	5624-09-107	ANGLE - TUCK BEARING MOUNT	1
09-OH CONVEYOR	03/03/15	5624-09-108	SPACER - MOTOR MOUNT	3
09-OH CONVEYOR	03/03/15	5624-09-109	ANGLE - MOTOR MOUNT	1
09-OH CONVEYOR	03/03/15	SPACER	M10-S-1.000-M10-6.485-M10 (idler brace)	1
09-OH CONVEYOR	03/03/15	SHAFT	M20-20-11.875 (tuck driven)	1
09-OH CONVEYOR	03/03/15	SPACER	A09-S-1.000-0.422-0.429 (bearing mount)	2
09-OH CONVEYOR	03/03/15	SPACER	A09-S-1.000-0.422-0.250 (bearing mount)	4
09-OH CONVEYOR	03/11/15	5624-09-100	BAR - O.H. CONV DRIVE GEARBOX MOUNT	1
09-OH CONVEYOR	04/10/15	5624-09-112	PLATE - O.H. TUCK DISK	2
09-OH CONVEYOR	04/23/15	5172-04-123	SCALE - SIDE GUIDE ADJUST	6
09-OH CONVEYOR	04/23/15	5624-20-125	POINTER	6
09-OH CONVEYOR	05/05/15	5624-09-117-2	ANGLE - SIDE GUIDE MOUNT	2
09-OH CONVEYOR	05/05/15	5624-09-117-3	ANGLE - SIDE GUIDE MOUNT	2
09-OH CONVEYOR	05/05/15	5624-09-118	SPACER - ADJ RAIL CAPT	6
09-OH CONVEYOR	05/05/15	5624-09-119	SCALE - 120MM LONG	6
09-OH CONVEYOR	05/05/15	5624-09-120	PLATE - SCALE BACKING	4
09-OH CONVEYOR	05/05/15	5624-09-121-2	ANGLE - SIDE GUIDE MOUNT	1
09-OH CONVEYOR	05/05/15	5624-09-121-3	ANGLE - SIDE GUIDE MOUNT	1
09-OH CONVEYOR	05/05/15	5624-09-122	ANGLE - LOWER LEVEL FLAG	1
09-OH CONVEYOR	05/05/15	5624-09-123	ANGLE - UPPER LIMIT FLAG	1

Fabrication Parts

SECTION	DATE	PART NO.	DESCRIPTION	QTY
09-OH CONVEYOR	05/07/15	5624-09-124	PLATE - O.H. PLOW MOUNT	2
09-OH CONVEYOR	05/27/15	5624-09-125	PLATE - O.H. SIDE GUIDE	2
09-OH CONVEYOR	05/29/15	5624-09-127	PLATE - TUCK MOUNT NUTPLATE	2
09-OH CONVEYOR	06/11/15	5624-20-125	POINTER	6
09-OH CONVEYOR	06/11/15	5172-04-123	SCALE - SIDE GUIDE ADJUST	6
09-OH CONVEYOR	06/11/15	SPACER	A09-S-0.750-0.344-1.000 (upper side guide mount)	6
09-OH CONVEYOR	06/23/15	5624-09-128	PLATE - OH TUCK DISK 15"	2
10-O.H. CONV MODS	**REF**	**5624-10-002**	**ASSEMBLY - O.H. LUGS, REC. DOUBLE**	**REF**
10-O.H. CONV MODS	**REF**	**5624-10-003**	**ASSEMBLY - O.H. LUGS, SQUARE SINGLE**	**REF**
10-O.H. CONV MODS	**REF**	**5624-10-004**	**ASSEMBLY - O.H. LUGS, ROUND SINGLE**	**REF**
10-O.H. CONV MODS	**REF**	**5624-10-005**	**ASSEMBLY - O.H. LUGS, REC. SINGLE**	**REF**
10-O.H. CONV MODS	**REF**	**5624-10-006**	**ASSEMBLY - O.H. LUGS, SQUARE DOUBLE**	**REF**
10-O.H. CONV MODS	**REF**	**5624-10-007**	**ASSEMBLY - O.H. LUGS, ROUND DOUBLE**	**REF**
10-O.H. CONV MODS	**REF**	**5624-10-008**	**ASSEMBLY - O.H. CONVEYOR BASE CHAIN**	**1**
10-O.H. CONV MODS	02/18/15	5624-10-116	PLATE - O.H. LUG CAPT.	48
10-O.H. CONV MODS	02/18/15	5624-10-117	BAR - PUSHER LUG MOUNT	24
10-O.H. CONV MODS	02/18/15	5624-10-119	SPACER - O.H. LUG BRACE	96
10-O.H. CONV MODS	02/18/15	5624-10-120	BLOCK - O.H. HOLD LUG	24
10-O.H. CONV MODS	02/18/15	5624-10-121	BAR - HOLD DOWN LUG MOUNT	24
10-O.H. CONV MODS	02/18/15	5624-10-122	BLOCK - O.H. HOLD LUG #2	24
10-O.H. CONV MODS	02/18/15	5624-10-123	BLOCK - O.H. HOLD DOWN SQUARE	24
10-O.H. CONV MODS	02/18/15	5624-10-125	BLOCK - HOLD DOWN ROUND	24
10-O.H. CONV MODS	02/18/15	5624-10-128	BLOCK - PUSH SQUARE STACK	24
10-O.H. CONV MODS	02/18/15	SPACER	A09-H-0.625-0.218-0.500 (lug mount)	96
10-O.H. CONV MODS	02/20/15	5624-10-118	BLOCK - O.H. PUSHER LUG, REC. STACK	24
10-O.H. CONV MODS	02/20/15	5624-10-124	BLOCK - PUSH LUG ROUND, SINGLE	24
10-O.H. CONV MODS	02/20/15	5624-10-126	BLOCK - HOLD DOWN SQUARE	24
10-O.H. CONV MODS	02/20/15	5624-10-127	BLOCK - PUSHER REC. SINGLE	24
10-O.H. CONV MODS	02/20/15	5624-10-129	BLOCK - PUSH ROUND STACK	24
11-SIDE CLOSE BC	**REF**	**5624-11-001**	**ASSEMBLY - CLOSING BC**	**REF**
11-SIDE CLOSE BC	**REF**	**5624-11-002**	**ASSEMBLY - LINEAR ROLLERS**	**REF**
11-SIDE CLOSE BC	**REF**	**5624-11-007**	**ASSEMBLY - CLOSING BC SIDE**	**REF**
11-SIDE CLOSE BC	**REF**	**5624-11-009**	**ASSEMBLY - CLOSING ARM**	**REF**
11-SIDE CLOSE BC	**REF**	**5624-11-012**	**ASSEMBLY - SLEEVE TRANSFER**	**REF**
11-SIDE CLOSE BC	12/30/14	100-38-101	INA ROLLER SPACER/SPINDLE (SIZE 32)	136
11-SIDE CLOSE BC	12/30/14	100-38-102	SPINDLE - SIZE 52 ROLLER	16
11-SIDE CLOSE BC	12/30/14	4525-0526	IDLER, #40-18 TOOTHLESS	2
11-SIDE CLOSE BC	12/30/14	5178-04-149	BRACKET - SUPPORT RAIL	8
11-SIDE CLOSE BC	12/30/14	5598-11-113	PLATE - SIKO MOUNT	2
11-SIDE CLOSE BC	12/30/14	5624-04-108	IDLER SPINDLE	2
11-SIDE CLOSE BC	12/30/14	5624-11-100	SPROCKET - BCL DRIVE	4
11-SIDE CLOSE BC	12/30/14	5624-11-102	SPROCKET - BCL IDLER	4
11-SIDE CLOSE BC	12/30/14	5624-11-103	RAIL - BCL CHAIN	4
11-SIDE CLOSE BC	12/30/14	5624-11-104	PLATE - ROLLER MOUNT	34
11-SIDE CLOSE BC	12/30/14	5624-11-105	BLOCK - ROLLER PLATE SPACER	68
11-SIDE CLOSE BC	12/30/14	5624-11-106	ANGLE - RETURN TRACK MOUNT	4
11-SIDE CLOSE BC	12/30/14	5624-11-107-2	ANGLE - CAM TRACK MOUNT	1
11-SIDE CLOSE BC	12/30/14	5624-11-107-3	ANGLE - CAM TRACK MOUNT	1
11-SIDE CLOSE BC	12/30/14	5624-11-108-2	ANGLE - BCL INSIDE	1
11-SIDE CLOSE BC	12/30/14	5624-11-108-3	ANGLE - BCL INSIDE	1

Fabrication Parts

SECTION	DATE	PART NO.	DESCRIPTION	QTY
11-SIDE CLOSE BC	12/30/14	5624-11-109	BAR - CROSSMEMBER	14
11-SIDE CLOSE BC	12/30/14	5624-11-110	SPROCKET - IDLER ADJSUT	4
11-SIDE CLOSE BC	12/30/14	5624-11-111	BLOCK - CONVEYOR IDLER SLIDER	4
11-SIDE CLOSE BC	12/30/14	5624-11-112	BLOCK - PROD. CONV T.U. SCREW	4
11-SIDE CLOSE BC	12/30/14	5624-11-113	SHAFT - IDLER	2
11-SIDE CLOSE BC	12/30/14	5624-11-114	ANGLE - IDLER BACKUP	4
11-SIDE CLOSE BC	12/30/14	5624-11-120	MOUNT - PUSHER	34
11-SIDE CLOSE BC	12/30/14	5624-11-122	SCREW SHAFT - HORIZONTAL ADJUST	2
11-SIDE CLOSE BC	12/30/14	5624-11-123	TRACK - RETURN	2
11-SIDE CLOSE BC	12/30/14	5624-11-124	SHAFT - BCL CLOSE	1
11-SIDE CLOSE BC	12/30/14	5624-11-125	SCREW SHAFT - HORIZONTAL ADJUST @ HANDLE	2
11-SIDE CLOSE BC	12/30/14	5624-11-126	PLATE - SPROCKET CLAMP	4
11-SIDE CLOSE BC	12/30/14	5624-11-127	HUB - ADJUSTABLE SPROCKET DRIVE	2
11-SIDE CLOSE BC	12/30/14	5624-11-128	CAM - TRACK ENTRY	2
11-SIDE CLOSE BC	12/30/14	5624-11-129-2	PLATE - CAM IN PUSH	1
11-SIDE CLOSE BC	12/30/14	5624-11-129-3	PLATE - CAM IN PUSH	1
11-SIDE CLOSE BC	12/30/14	5624-11-130-2	PLATE - CAM OUT PULL	1
11-SIDE CLOSE BC	12/30/14	5624-11-130-3	PLATE - CAM OUT PULL	1
11-SIDE CLOSE BC	12/30/14	5624-11-131	GUIDE - CAM @ DRIVE	2
11-SIDE CLOSE BC	12/30/14	5624-11-132-2	ANGLE - RETURN TRACK MOUNT	1
11-SIDE CLOSE BC	12/30/14	5624-11-132-3	ANGLE - RETURN TRACK MOUNT	1
11-SIDE CLOSE BC	12/30/14	5624-11-133	TRACK - RETURN CAM	2
11-SIDE CLOSE BC	12/30/14	5624-11-134	HUB - CAM IDLE GUIDE	2
11-SIDE CLOSE BC	12/30/14	5624-11-135	PLATE - SLIDING HUB CAPT	2
11-SIDE CLOSE BC	12/30/14	5624-11-136-2	ANGLE - OUTSIDE PLATE	1
11-SIDE CLOSE BC	12/30/14	5624-11-136-3	ANGLE - OUTSIDE PLATE	1
11-SIDE CLOSE BC	12/30/14	5624-11-137	BAR - LOWER CROSSMEMBER	14
11-SIDE CLOSE BC	12/30/14	5624-11-139	ANGLE - BCL ROLLER SUPPORT	4
11-SIDE CLOSE BC	12/30/14	5624-11-140	BLOCK - SIDE ADJUST	4
11-SIDE CLOSE BC	12/30/14	5624-11-141	HUB - BCL DRIVEN	1
11-SIDE CLOSE BC	12/30/14	830-04-110	SPROCKET - PANEL ADJUST	4
11-SIDE CLOSE BC	12/30/14	830-09-126	SHAFT - T.U. ADJUSTER ALL THREAD	4
11-SIDE CLOSE BC	12/30/14	SHAFT	M16-25-0.375-M8 (IDLER PLATE)	4
11-SIDE CLOSE BC	12/30/14	SPACER	A11-D-2.500-1.875-0.240-2-XX (DRIVE HUB)	4
11-SIDE CLOSE BC	12/30/14	SPACER	A09-S-0.625-0.438-0.090 (CAM FOLLOWER)	34
11-SIDE CLOSE BC	12/30/14	SPACER	A09-S-0.750-0.266-0.788 (TRACK MOUNT)	21
11-SIDE CLOSE BC	12/30/14	SPACER	A09-S-0.750-0.344-0.250 (ADJUST BLOCK)	12
11-SIDE CLOSE BC	12/30/14	SPACER	A09-S-1.000-0.422-0.250 (SUPPORT RAIL, BERAING MNT)	20
11-SIDE CLOSE BC	12/30/14	SPACER	A09-S-1.000-0.422-0.500 (BEARING MOUNT)	4
11-SIDE CLOSE BC	12/30/14	SPACER	A09-S-1.125-0.265-0.120 (acme shaft capt.)	4
11-SIDE CLOSE BC	12/30/14	SPACER	A09-S-1.250-0.547-0.250 (BRG MOUNT)	4
11-SIDE CLOSE BC	12/30/14	SPACER	A09-S-1.375-0.344-0.179 (idler capt)	2
11-SIDE CLOSE BC	12/30/14	SPACER	M10-S-1.250-M10-3.875-M10 (HUB CAPT)	4
11-SIDE CLOSE BC	01/23/15	5624-11-116	BAR - CAM BEARING MOUNT (new dim)	34
11-SIDE CLOSE BC	01/23/15	5624-11-118	MOUNT - PUSHER (new dim)	34
11-SIDE CLOSE BC	01/23/15	5624-11-143	TRACK - BCL CLOSE RUNNER	34
11-SIDE CLOSE BC	02/05/15	5624-11-145	RAIL - CLOSE BCL SUPPORT	4
11-SIDE CLOSE BC	02/05/15	5624-12-118	BAR - CLOSING INA TRACK MNT	4
11-SIDE CLOSE BC	02/25/15	5624-11-121-2	BLOCK - SLEEVE SIDE CONTROL	17

Fabrication Parts

SECTION	DATE	PART NO.	DESCRIPTION	QTY
11-SIDE CLOSE BC	02/25/15	5624-11-121-3	BLOCK - SLEEVE SIDE CONTROL	17
11-SIDE CLOSE BC	03/03/15	SPACER	A09-S-0.750-0.266-0.788 (TRACK MOUNT) (need 21 more)	21
11-SIDE CLOSE BC	03/21/15	5624-11-146	PLATE - IDLER MOUNT	1
11-SIDE CLOSE BC	03/21/15	100-05-102	WELDMENT - #50-15T IDLER (WASHDOWN)	1
11-SIDE CLOSE BC	03/21/15	100-05-115	SPACER - IDLER LUBE	1
11-SIDE CLOSE BC	03/21/15	100-05-116	BOLT - IDLER LUBE	1
11-SIDE CLOSE BC	03/21/15	IDLER BRKT	A27-1.250	1
11-SIDE CLOSE BC	03/21/15	SPACER	A09-S-1.000-0.344-0.612 (idler plate mount)	2
11-SIDE CLOSE BC	03/26/15	5624-11-147	BAR - STRIPPER MOUNT	2
11-SIDE CLOSE BC	03/26/15	5624-11-148	BAR - CHAIN STRIPPER	2
11-SIDE CLOSE BC	04/09/15	5624-11-150	PLATE - CAM IDLE GUIDE	8
11-SIDE CLOSE BC	04/22/15	5624-11-151	SPROCKET - BCL DRIVEN (50A35)	1
11-SIDE CLOSE BC	05/20/15	5624-11-153	PLATE - TIMING HUB	1
12-SQUARING CHAIN	**REF**	**5624-12-002**	**ASSEMBLY - SQ CHAIN**	**REF**
12-SQUARING CHAIN	**02/04/15**	**5426-12-104**	**ASSY - SQUARING CHAIN (7 @ 9" = 63")**	**1**
12-SQUARING CHAIN	02/04/15	4970-12-116	HARKESS LUG - SQUARING CHAIN	7
12-SQUARING CHAIN	02/04/15	5178-12-105	SPROCKET - SQ. CHAIN IDLER	1
12-SQUARING CHAIN	02/04/15	5178-12-115	SPROCKET - SQUARING CHAIN DRIVE	1
12-SQUARING CHAIN	02/04/15	5178-12-116	SPACER - IDLER LUBE	1
12-SQUARING CHAIN	02/04/15	5426-12-105	GUIDE - SQ. CHAIN RUNNER	1
12-SQUARING CHAIN	02/04/15	5624-12-100	PLATE - SQ. CHAIN MAIN MOUNT	1
12-SQUARING CHAIN	02/04/15	5624-12-101	ANGLE - IDLER BACKUP	1
12-SQUARING CHAIN	02/04/15	5624-12-102	PLATE - BEARING MOUNT	2
12-SQUARING CHAIN	02/04/15	5624-12-103	PLATE - HARKESS RUNNER	1
12-SQUARING CHAIN	02/04/15	5624-12-104	316 SPACER - HARKES RUNNER	2
12-SQUARING CHAIN	02/04/15	5624-12-105	SPACER - CHAIN RUNNER MNT	3
12-SQUARING CHAIN	02/04/15	5624-12-106	BUSHING - SPRING END	2
12-SQUARING CHAIN	02/04/15	5624-12-107	SPACER - SQ. CHAIN IDLER CAPT.	2
12-SQUARING CHAIN	02/04/15	5624-12-108	WELDMENT - SQ. CHAIN TAKEUP	1
12-SQUARING CHAIN	02/04/15	5624-12-112	PLATE - DRIVE CAPT.	1
12-SQUARING CHAIN	02/04/15	5624-12-113	BOLT - CARTON ADJUST	1
12-SQUARING CHAIN	02/04/15	5624-12-114	SPACER - MAIN PLATE MOUNT	3
12-SQUARING CHAIN	02/04/15	5624-12-115	SHAFT - SQ. CHAIN DRIVE	1
12-SQUARING CHAIN	02/05/15	IDLER BRACKET	A26-1.000	1
12-SQUARING CHAIN	02/05/15	100-05-101	WELDMENT - #40-17T IDLER (WASHDOWN)	1
12-SQUARING CHAIN	02/05/15	100-05-115	SPACER - IDLER LUBE	1
12-SQUARING CHAIN	02/05/15	100-05-116	BOLT - IDLER LUBE	1
12-SQUARING CHAIN	02/05/15	SPACER	A09-S-1.000-0.344-0.121 (sq. chain idler)	2
12-SQUARING CHAIN	02/06/15	5178-12-115	SPROCKET - SQUARING CHAIN DRIVE	1
12-SQUARING CHAIN	02/06/15	5624-12-116	SPROCKET - SQ CHAIN DRIVE	1
12-SQUARING CHAIN	02/06/15	5624-12-117	HUB - SQUARING CHAIN DRIVE	1
12-SQUARING CHAIN	03/17/15	5624-12-120	PLATE - IDLER MOUNT	1
13-CLOSING PLOWS	**REF**	**5624-13-003**	**ASSEMBLY - CLOSING PLOWS**	**REF**
13-CLOSING PLOWS	**REF**	**100-05-001**	**ASSEMBLY - #40-17T IDLER (WASHDOWN)**	**REF**
13-CLOSING PLOWS	01/28/14	5624-13-101	BAR - CLOSING MAIN SUPPORT	1
13-CLOSING PLOWS	01/28/14	5624-13-103	ANGLE - CLOSING BAR SUPPORT	1
13-CLOSING PLOWS	01/28/14	5624-13-105	CHANNEL - COMPRESSION PLOW L/H	1
13-CLOSING PLOWS	01/28/14	5624-13-108	WELDMENT - CLOSING PLOW MOUNT	4
13-CLOSING PLOWS	01/28/14	5624-13-111	WELDMENT - COMPRESSION PLOW MOUNT	2
13-CLOSING PLOWS	01/28/14	5624-13-114	BAR - GLUE GUN MOUNT	1

Fabrication Parts

SECTION	DATE	PART NO.	DESCRIPTION	QTY
13-CLOSING PLOWS	01/28/14	5624-13-115	CROSSBAR SUPPORT FOR TOUNGE	2
13-CLOSING PLOWS	02/05/15	5624-13-100	BAR - CLOSING SEC. MAIN SUPPORT	1
13-CLOSING PLOWS	02/05/15	5624-13-101	BAR - CLOSING MAIN SUPPORT	1
13-CLOSING PLOWS	02/05/15	5624-13-119	PLATE - CLOSING SECTION MOUNT	2
13-CLOSING PLOWS	03/09/15	SPACER	A09-S-1.000-0.344-0.121 (CLOSING PLOWS)	6
13-CLOSING PLOWS	03/10/15	5624-13-120	BAR - TRANSFER PLATE MOUNT	1
13-CLOSING PLOWS	03/10/15	5624-13-102	PLATE - PRODUCT TRANSFER TOUNGE (rectangle size)	1
13-CLOSING PLOWS	03/10/15	5624-13-116	PLATE - LOWER TRANSFER MOUNT (remake @ new dim)	1
13-CLOSING PLOWS	03/12/15	5624-13-121	PLATE - LOWER TRANSFER MOUNT (quick change)	1
13-CLOSING PLOWS	03/12/15	5624-13-122	SPINDLE - TRANSFER PLATE MOUNT	1
13-CLOSING PLOWS	03/13/15	5624-13-120	BAR - TRANSFER PLATE MOUNT (need 2 more)	2
13-CLOSING PLOWS	03/13/15	5624-13-121	PLATE - LOWER TRANSFER MOUNT (need 2 more)	2
13-CLOSING PLOWS	04/17/15	5172-04-123	SCALE - SIDE GUIDE ADJUST	1
13-CLOSING PLOWS	04/17/15	5624-13-125	ANGLE - GLUE GUN MOUNT	1
13-CLOSING PLOWS	04/17/15	5624-13-126	ANGLE - GLUE GUN MOUNT	1
13-CLOSING PLOWS	04/17/15	5624-13-127	PLATE - CAPTURE POINTER	1
13-CLOSING PLOWS	04/17/15	SPACER	A09-S-0.625-0.266-0.260 (gun mount capt)	2
13-CLOSING PLOWS	04/21/15	5624-13-124	PLATE - SQUARE PROD. TRANSFER TOUNGE	1
13-CLOSING PLOWS	04/23/15	SPACER	A09-S-1.000-0.344-0.250 (plow move)	4
13-CLOSING PLOWS	05/13/15	5624-13-128	PLATE - ROUND PROD. TRANSFER TOUNGE	1
13-CLOSING PLOWS	05/23/15	5624-13-129	BLOCK - SCALE MOUNT	8
13-CLOSING PLOWS	05/23/15	5624-13-130	MOUNT - SCALE	1
13-CLOSING PLOWS	05/23/15	5624-13-131	CHANNEL - SHORT FLAP CLOSING PLOW	1
13-CLOSING PLOWS	06/03/15	5624-13-133	CHANNEL - LONG FLAP CLOSING PLOW	1
13-CLOSING PLOWS	06/05/15	5624-13-134-2	ANGLE - FOLDING PLOW MOUNT	1
13-CLOSING PLOWS	06/05/15	5624-13-134-3	ANGLE - FOLDING PLOW MOUNT	1
13-CLOSING PLOWS	06/05/15	5624-13-135	ANGLE - FOLDING PLOW MOUNT	1
13-CLOSING PLOWS	06/05/15	5624-13-136	WELDMENT - CLOSING PLOW MOUNT	1
13-CLOSING PLOWS	06/05/15	5624-13-138	ANGLE - FOLD PLOW MOUNT UPSTREAM RH	1
13-CLOSING PLOWS	06/05/15	5624-13-139	WELDMENT - CLOSING PLOW MOUNT	1
13-CLOSING PLOWS	06/05/15	SPACER	A09-S-1.000-0.422-0.250	8
14-DISCHARGE CONV	**REF**	**5624-14-001**	**ASSEMBLY - DISCHARGE CONVEYOR**	**REF**
14-DISCHARGE CONV	12/12/14	5178-25-113	PULLEY - CONVEYOR BELT DRIVE	2
14-DISCHARGE CONV	12/12/14	5228-14-107	BAR - RUNNER SUPPORT	3
14-DISCHARGE CONV	12/12/14	5228-14-108	BAR - RUNNER ANCHOR	1
14-DISCHARGE CONV	12/12/14	5228-14-109	RUNNER DISCHARGE CONVEYOR	2
14-DISCHARGE CONV	12/12/14	5228-14-110	ROLLER - CONVEYOR IDLE	1
14-DISCHARGE CONV	12/12/14	5228-14-111	SHAFT - IDLE ROLLER	6
14-DISCHARGE CONV	12/12/14	5228-14-121	GUARD - CHAIN	1
14-DISCHARGE CONV	12/12/14	5228-14-122	MOUNT - CHAIN GUARD	1
14-DISCHARGE CONV	12/12/14	5304-16-160	GUARD	2
14-DISCHARGE CONV	12/12/14	5304-16-161	GUARD	2
14-DISCHARGE CONV	12/12/14	5398-14-101	NUTPLATE - 3 HOLE FLANGE BEARING	2
14-DISCHARGE CONV	12/12/14	5398-14-114	SHAFT - COVNEYOR DRIVE	1
14-DISCHARGE CONV	12/12/14	5398-14-125	MOUNT - SIDE GUIDE	4
14-DISCHARGE CONV	12/12/14	5580-14-100	MOUNT - GEARMOTOR	1
14-DISCHARGE CONV	12/12/14	5580-14-101-2	MOUNT - DISCHARGE COVNEYOR	1
14-DISCHARGE CONV	12/12/14	5580-14-101-3	MOUNT - DISCHARGE COVNEYOR	1
14-DISCHARGE CONV	12/12/14	SPACER	A09-S-0.750-0.344-0.250 (conv mount)	16

Fabrication Parts

SECTION	DATE	PART NO.	DESCRIPTION	QTY
14-DISCHARGE CONV	12/12/14	SPACER	M10-S-0.750-M6-2.500-M6 (chain guard)	4
14-DISCHARGE CONV	12/12/14	SPACER	M10-S-1.000-M10-3.750-M10 (motor mount)	2
14-DISCHARGE CONV	12/12/14	SPROCKET	M01-S-401-14-25 (driven)	1
14-DISCHARGE CONV	12/12/14	SPROCKET	M01-S-401-14-14 (drive)	1
14-DISCHARGE CONV	02/13/15	5624-14-100	PANEL - DISCHARGE CONVEYOR L/H (remake @ 316ss)	1
14-DISCHARGE CONV	02/13/15	5624-14-101	PANEL - DISCHARGE COVNEYOR (remake @ 316ss)	1
14-DISCHARGE CONV	02/26/15	5624-14-103	ANGLE - CONVEYOR BRACE	2
14-DISCHARGE CONV	03/23/15	5624-14-104	WELDMENT - BLOW OFF MOUNT	1
14-DISCHARGE CONV	03/23/15	5624-14-105	WELDMENT - PRODUCT BLOW OFF	1
14-DISCHARGE CONV	03/23/15	SPACER	A09-S-1.000-0.344-0.750 (blow off mount)	2
14-DISCHARGE CONV	03/24/15	5172-04-123	SCALE - SIDE GUIDE ADJUST	4
14-DISCHARGE CONV	03/24/15	5624-14-108-2	ANGLE - SIDE GUIDE SUPPORT	2
14-DISCHARGE CONV	03/24/15	5624-14-108-3	ANGLE - SIDE GUIDE SUPPORT	2
14-DISCHARGE CONV	03/24/15	5624-14-109	PLATE - CAPTURE POINTER	4
14-DISCHARGE CONV	03/24/15	5624-14-110-2	ANGLE - DISCHARGE SIDE GUIDE	1
14-DISCHARGE CONV	03/24/15	5624-14-110-3	ANGLE - DISCHARGE SIDE GUIDE	1
14-DISCHARGE CONV	03/24/15	5624-14-111	ANGLE - DISCHARGE SIDE GUIDE	1
14-DISCHARGE CONV	03/24/15	5624-14-112	ANGLE - DISCHARGE SIDE GUIDE	1
14-DISCHARGE CONV	03/24/15	SPACER	A09-S-0.375-0.218-0.130 (guide capture)	8
14-DISCHARGE CONV	03/24/15	SPACER	A09-S-0.750-0.344-1.125 (guide mount)	8
14-DISCHARGE CONV	04/06/15	SPACER	A09-S-0.75-00.344-0.375 (reject shoot mount)	4
14-DISCHARGE CONV	04/06/15	5624-14-114	WELDMENT - PRODUCT REJECT SHOOT	1
14-DISCHARGE CONV	04/23/15	SPACER	M10-S-0.750-M8-1.500-M6 (blowoff p.e. mount)	2
14-DISCHARGE CONV	06/27/15	5624-14-115	PLATE - BLOW OFF OFFSET	1
15-SEALING SYSTEM	12/12/14	5178-15-108	WELDMENT MOUNT GLUE HOSE	2
16-MAIN GUARDS	**REF**	**5426-16-003**	**ASSEMBLY - TIMING SCREW GUARDS**	**1**
16-MAIN GUARDS	**REF**	**5624-16-004**	**ASSEMBLY - INFEED CAGE**	**1**
16-MAIN GUARDS	**REF**	**5624-16-005**	**ASSEMBLY - RH UPSTREAMGUARD DOOR**	**1**
16-MAIN GUARDS	**REF**	**5426-16-006**	**ASSEMBLY - RH UPSTREAMGUARD DOOR**	**1**
16-MAIN GUARDS	**REF**	**5426-16-014**	**ASSEMBLY - RH UPSTREAMGUARD DOOR**	**1**
16-MAIN GUARDS	**REF**	**5624-16-015-2**	**ASSEMBLY - RH UPSTREAM GUARD DOOR**	**2**
16-MAIN GUARDS	**REF**	**5624-16-015-3**	**ASSEMBLY - RH UPSTREAM GUARD DOOR**	**2**
16-MAIN GUARDS	01/22/15	5178-16-180	SPACER - STOP BUMPER	4
16-MAIN GUARDS	01/22/15	5426-16-101-2	WELDMENT - GUARD DOOR	2
16-MAIN GUARDS	01/22/15	5426-16-101-3	WELDMENT - GUARD DOOR	2
16-MAIN GUARDS	01/22/15	5426-16-104	WINDOW - DOOR	4
16-MAIN GUARDS	01/22/15	5426-16-105-2	HANDLE - GUARD DOOR	4
16-MAIN GUARDS	01/22/15	5426-16-105-3	HANDLE - GUARD DOOR	4
16-MAIN GUARDS	01/22/15	5426-16-106	NUTBAR - DOOR HANDLE	8
16-MAIN GUARDS	01/22/15	5426-16-109-2	WELDMENT - GUARD DOOR	2
16-MAIN GUARDS	01/22/15	5426-16-109-3	WELDMENT - GUARD DOOR	2
16-MAIN GUARDS	01/22/15	5426-16-111	WINDOW - DOOR	4
16-MAIN GUARDS	01/22/15	5426-16-112-2	BRKT - MAGNET MOUNT	4
16-MAIN GUARDS	01/22/15	5426-16-112-3	BRKT - MAGNET MOUNT	4
16-MAIN GUARDS	01/22/15	5426-16-113	GUARD - DOOR GAP	2
16-MAIN GUARDS	01/22/15	5426-16-170	GUARD DOOR STOP	4
16-MAIN GUARDS	01/22/15	5580-16-113	ANGLE - TUNNEL MOUNT	3
16-MAIN GUARDS	02/24/15	5426-16-112-2	BRKT - MAGNET MOUNT	2
16-MAIN GUARDS	02/24/15	5426-16-112-3	BRKT - MAGNET MOUNT	2
16-MAIN GUARDS	02/24/15	5426-16-136-2	MOUNT - DOOR SENSOR & CATCH	2

Fabrication Parts

SECTION	DATE	PART NO.	DESCRIPTION	QTY
16-MAIN GUARDS	02/24/15	5426-16-136-3	MOUNT - DOOR SENSOR & CATCH	2
16-MAIN GUARDS	02/24/15	5624-16-121	WELDMENT - TIMING SCREW CAGE UPPER SIDE ANGLE	2
16-MAIN GUARDS	02/24/15	5624-16-129	WELDMENT - TIMING SCREW CAGE LOWER SIDE ANGLE	2
16-MAIN GUARDS	02/24/15	5624-16-130-2	WELDMENT - GUARD DOOR	2
16-MAIN GUARDS	02/24/15	5624-16-130-3	WELDMENT - GUARD DOOR	2
16-MAIN GUARDS	02/24/15	5624-16-133	WINDOW - DOOR	4
16-MAIN GUARDS	02/24/15	5624-16-135-2	HANDLE - INFEED GUARD DOOR	2
16-MAIN GUARDS	02/24/15	5624-16-135-3	HANDLE - INFEED GUARD DOOR	2
16-MAIN GUARDS	02/24/15	5624-16-144	WELDMENT - STARWHEEL CAGE HOOP	2
16-MAIN GUARDS	02/24/15	5624-16-156	NUTBAR - DOOR HANDLE	4
16-MAIN GUARDS	02/24/15	5624-16-172	STARWHEEL GUARD - DOWNSTREAM	1
16-MAIN GUARDS	02/24/15	5624-16-189	TIMING SCREW TOP GUARD	1
16-MAIN GUARDS	02/24/15	5624-16-192	CHANNEL - CAGE BOTTOM SUPPORT	4
16-MAIN GUARDS	02/24/15	SPACER	A09-S-0.750-0.281-0.250	16
16-MAIN GUARDS	02/24/15	SPACER	A09-S-0.750-0.281-0.888	12
16-MAIN GUARDS	02/24/15	SPACER	A10-S-1.000-C3-0.688-C3	2
16-MAIN GUARDS	03/31/15	SPACER	M10-S-1.000-M8-4.469-M8 (infeed guard brace)	1
16-MAIN GUARDS	04/21/15	5624-16-203	GUARD ENCODER	1
16-MAIN GUARDS	04/23/15	5624-16-204	GUARD DISCHARGE L/H SIDE	1
16-MAIN GUARDS	04/23/15	5624-16-205	GUARD SUPPORT	1
16-MAIN GUARDS	04/24/15	5624-16-206	WELDMENT-DISCHARGE WINDOW	1
16-MAIN GUARDS	04/24/15	5624-16-207	GUARD DISCHARGE WINDOW	1
16-MAIN GUARDS	04/24/15	5624-16-208	GUARD WINDOW SIDE DISCHARGE	1
16-MAIN GUARDS	04/24/15	5624-16-209	GUARD WINDOW BOTTOM DISCHARGE	1
16-MAIN GUARDS	04/24/15	5624-16-210	GUARD TUNNEL DISCHARGE	1
16-MAIN GUARDS	04/29/15	5624-16-211	GUARD DOOR WINDOW	1
16-MAIN GUARDS	05/18/15	5624-16-172	STARWEEL GUARD - DOUNSTREAM	1
16-MAIN GUARDS	05/18/15	5624-16-103-2	ANGLE - INFEED CONVEYOR	1
16-MAIN GUARDS	05/18/15	5624-16-103-3	ANGLE - INFEED CONVEYOR	1
16-MAIN GUARDS	05/20/15	5402-16-143	PLATE - GUARD DOOR SPACER 7 GAUGE	4
16-MAIN GUARDS	05/20/15	5624-16-212-2	WELDMENT - INFEED CAGE UPPER SIDE ANGLE	1
16-MAIN GUARDS	05/20/15	5624-16-212-3	WELDMENT - INFEED CAGE UPPER SIDE ANGLE	1
16-MAIN GUARDS	05/20/15	5624-16-214-2	WELDMENT - INFEED CAGE LOWER SIDE ANGLE	1
16-MAIN GUARDS	05/20/15	5624-16-214-3	WELDMENT - INFEED CAGE LOWER SIDE ANGLE	1
16-MAIN GUARDS	05/20/15	5624-16-216	WELDMENT - INFEED CAGE HOOP	1
16-MAIN GUARDS	05/20/15	5624-16-219	BAR - UPSTREAM CGAE SUPPORT	1
16-MAIN GUARDS	05/20/15	5624-16-220	ANGLE - CAGE BRACE	2
16-MAIN GUARDS	05/20/15	5624-16-221-2	WELDMENT - GUARD DOOR	1
16-MAIN GUARDS	05/20/15	5624-16-221-3	WELDMENT - GUARD DOOR	1
16-MAIN GUARDS	05/20/15	5624-16-224-2	HANDLE - INFEED GUARD DOOR	1
16-MAIN GUARDS	05/20/15	5624-16-224-3	HANDLE - INFEED GUARD DOOR	1
16-MAIN GUARDS	05/20/15	5624-16-225	NUTBAR - DOOR HANDLE	2
16-MAIN GUARDS	05/20/15	5624-16-226	WINDOW - DOOR	2
16-MAIN GUARDS	05/20/15	5624-16-227	MOUNT - DOOR SENSOR & PATCH	2
16-MAIN GUARDS	05/20/15	5624-16-228-2	BRKT - MAGNET MOUNT	2
16-MAIN GUARDS	05/20/15	5624-16-228-3	BRKT - MAGNET MOUNT	2
16-MAIN GUARDS	05/20/15	5624-16-229	LEXAN - BEHIND HOPPER	1
16-MAIN GUARDS	05/20/15	5624-16-230	LEXAN - SIDE OF HOPPER	2
16-MAIN GUARDS	05/20/15	5624-16-231	LEXAN - ROBOT DISCHARGE	1

Fabrication Parts

SECTION	DATE	PART NO.	DESCRIPTION	QTY
16-MAIN GUARDS	05/20/15	5624-16-232	LEXAN - ROBOT DISCHARGE SIDE	2
16-MAIN GUARDS	05/20/15	5624-16-233	COVER - DOOR BOTTOM	2
16-MAIN GUARDS	05/20/15	5624-16-234	ANGLE - LEXAN SUPPORT	1
16-MAIN GUARDS	05/20/15	NUTPLATE	M24-S-0.750-1.500-0.750-0.250-M8 (doors)	8
16-MAIN GUARDS	05/20/15	SPACER	A09-S-0.750-0.265-0.179 (lexan support)	2
16-MAIN GUARDS	05/20/15	SPACER	A09-S-0.750-0.281-0.388 (latch plate)	8
16-MAIN GUARDS	05/20/15	SPACER	A10-S-1.000-C3-0.688-C3 (BUMPER STOPS)	8
16-MAIN GUARDS	05/20/15	SPACER	M10-H-1.000-M8-44.500-M8 (lower cage brace)	1
16-MAIN GUARDS	05/26/15	5624-16-235	FRAME - INFEED GUARD	1
16-MAIN GUARDS	05/27/15	5624-16-236	LEXAN - HOPPER MOUNT TOP SIDE	2
16-MAIN GUARDS	05/29/15	5624-16-237-2	WELDMENT - GUARD DOOR SHORT (made by rework)	1
16-MAIN GUARDS	05/29/15	5624-16-237-3	WELDMENT - GUARD DOOR SHORT (made by rework)	1
16-MAIN GUARDS	05/29/15	5624-16-240-2	HANDLE - INFEED GUARD DOOR SHORT	1
16-MAIN GUARDS	05/29/15	5624-16-240-3	HANDLE - INFEED GUARD DOOR SHORT	1
16-MAIN GUARDS	05/29/15	5624-16-241	NUTBAR - DOOR HANDLE SHORT	2
16-MAIN GUARDS	05/29/15	5624-16-242	CHANNEL - DOOR STOP MOUNT	1
16-MAIN GUARDS	06/01/15	5624-16-239	WINDOW - SHORT	2
17-LUBRICATION	01/20/15	5317-17-100	MAIN GREASE BLOCK - 16 PORT	2
17-LUBRICATION	01/20/15	5319-17-101	HALF GREASE BLOCK - 10 PORT	1
17-LUBRICATION	03/13/15	5624-17-102	PLATE - LUBE CABINET MOUNT	1
17-LUBRICATION	03/13/15	SPACER	M10-S-1.000-M8-1.375-M8 (lube cabinet mount)	1
17-LUBRICATION	03/13/15	SPACER	M10-S-1.000-M8-1.375-M10 (lube cabinet mount)	1
17-LUBRICATION	03/13/15	SPACER	M10-S-1.000-M8-1.375-M12 (lube cabinet mount)	1
17-LUBRICATION	03/26/15	5624-17-101	PLATE - LUBE PUMP MOUNT	1
17-LUBRICATION	03/26/15	NUTPLATE	M24-S-9.250-10.250-1.000-0.250-M8 (pump mount)	1
18-ELECTRICAL	**REF**	**5579-18-001**	**ASSMEBLY - ELECTRICAL COMPONENTS**	**REF**
18-ELECTRICAL	**REF**	**5624-18-003**	**STRONG ARM MOUNT ASSEMBLY**	**REF**
18-ELECTRICAL	**REF**	**5624-18-004**	**ASSEMBLY - ELECTRICAL COMPONENTS**	**REF**
18-ELECTRICAL	01/26/15	100-45-103	CLIP - WIRE BASKET MOUNT	56
18-ELECTRICAL	01/26/15	5267-18-128	BAR - PENDANT PLATE MOUNT	2
18-ELECTRICAL	01/26/15	5304-18-126	WELDMENT - STACK LIGHT BRACKET	1
18-ELECTRICAL	01/26/15	5312-18-112	PLATE - BASKET MOUNT	3
18-ELECTRICAL	01/26/15	5319-18-100	WIRE WAY - 63 1/8" LONG	2
18-ELECTRICAL	01/26/15	5319-18-101	WIRE WAY - 47 3/8" LONG	2
18-ELECTRICAL	01/26/15	5319-18-105-3	ANGLE - WIREWAY MOUNT MIDSTREAM	1
18-ELECTRICAL	01/26/15	5319-18-106	ANGLE - WIREWAY MOUNT UPPER CORNER	4
18-ELECTRICAL	01/26/15	5319-18-107	WIRE WAY - 55 1/4" LONG	1
18-ELECTRICAL	01/26/15	5319-18-110	ANGLE - WIREWAY MOUNT AT FEEDER	1
18-ELECTRICAL	01/26/15	5319-18-111	WIRE WAY - 74 15/16" LONG	1
18-ELECTRICAL	01/26/15	5390-17-130	PENDANT ARM - MAIN CONTROL BOX	1
18-ELECTRICAL	01/26/15	5398-18-101	BAR - CABINET MOUNT	2
18-ELECTRICAL	01/26/15	5398-18-111	WELDMENT - PENDANT MOUNT	1
18-ELECTRICAL	01/26/15	5402-18-120	PLATE - BASKET MOUNT	1
18-ELECTRICAL	01/26/15	5426-18-111	PLATE - WIREWAY MOUNT	2
18-ELECTRICAL	01/26/15	5426-18-113	ANGLE - WIREWAY MOUNT DOWNSTREAM CORNER	1
18-ELECTRICAL	01/26/15	5426-18-114	ANGLE - WIREWAY MOUNT DOWNSTREAM CORNER	1
18-ELECTRICAL	01/26/15	5426-18-115	ANGLE - WIREWAY MOUNT MIDSTREAM	1
18-ELECTRICAL	01/26/15	5579-18-106	ANGLE - MAIN FRAME E-STOP MOUNT	1
18-ELECTRICAL	01/26/15	5580-18-102	WELDMENT - MAIN CABINET MOUNT	1
18-ELECTRICAL	01/26/15	5624-18-102	PLATE - PENDANT MOUNT	1

Fabrication Parts

SECTION	DATE	PART NO.	DESCRIPTION	QTY
18-ELECTRICAL	01/26/15	SPACER	M10-S-0.750-M8-1.625-M8	8
18-ELECTRICAL	01/26/15	SPACER	M10-S-1.250-M10-1.625-M10 (estop mount)	4
18-ELECTRICAL	01/26/15	SPACER	M10-S-1.250-M10-5.125-M10 (pendant mount)	2
18-ELECTRICAL	02/13/15	5624-18-104	PLATE - TRANSFORMAR MOUNT	1
18-ELECTRICAL	02/13/15	5624-18-106	BAR - CABINET MOUNT	1
18-ELECTRICAL	02/13/15	5624-18-107	PLATE - CABINET MOUNT	1
18-ELECTRICAL	02/13/15	SPACER	A09-S-1.250-0.422-0.625 (cabinet mount)	2
18-ELECTRICAL	03/04/15	5624-18-108	ANGLE - MAIN FRAME E-STOP MOUNT	1
18-ELECTRICAL	03/05/15	5624-18-105	MAIN CABINT CUT	1
18-ELECTRICAL	03/06/15	5267-18-127	BAR - VACUUM PUMP MOUNT	2
18-ELECTRICAL	03/10/15	5624-18-109	CABINET - JUNCTION BOX	1
18-ELECTRICAL	03/10/15	5624-18-110	ANGLE - PICK VALVE MOUNT	1
18-ELECTRICAL	03/10/15	5624-18-111	PLATE - WIREWAY	1
18-ELECTRICAL	03/12/15	5624-18-113	ANGLE - REMOTE OP MOUNT	1
18-ELECTRICAL	03/12/15	SPACER	A09-S-1.000-0.344-0.500 (Rremote op mount)	1
18-ELECTRICAL	03/17/15	5624-18-114	ANGLE - WIREWAY BRACE	1
18-ELECTRICAL	03/23/15	5402-18-115	PLATE - FRL MOUNT FOR SMC#AC30-IEM02	1
18-ELECTRICAL	04/06/15	5624-18-115	WELDMENT - MAIN DRIVE PROX MOUNT	1
18-ELECTRICAL	04/08/15	NUTPLATE	M24-S-1.000-1.750-0.750-0.250-M6 (prox mount)	1
18-ELECTRICAL	04/14/15	5624-18-116	PLATE - REFLECTOR MOUNT	1
18-ELECTRICAL	04/14/15	NUTPLATE	M24-S-1.305-1.875-0.750-M4 (top relec. Mount)	1
18-ELECTRICAL	04/14/15	SPACER	M10-S-0.750-M6-1.181-M6 (reflec mount)	2
18-ELECTRICAL	04/25/15	5624-18-117	MOUNT P.E. GLUE	1
18-ELECTRICAL	05/29/15	5624-18-118	PLATE - DISCONNECT MOUNT	1
18-ELECTRICAL	05/29/15	SPACER	M10-S-1.000-M8-1.750-M8 (disc. mount)	2
18-ELECTRICAL	06/03/15	5624-18-119	MOUNT DEVICE LABEL	10
18-ELECTRICAL	06/03/15	5624-18-120	MOUNT GUARD DOOR LABELS	6
18-ELECTRICAL	06/06/15	5624-18-122	ANGLE - LIGHT STACK TAG MOUNT	1
18-ELECTRICAL	06/06/15	SPACER	A09-S-1.000-0.422-0.250 (tag mount)	1
19-INDEXING SYSTEM	**REF**	**5624-19-004**	**ASSEMBLY - ADJ FEEDSCREW MOUNT**	**REF**
19-INDEXING SYSTEM	**REF**	**5624-19-005**	**ASSEMBLY - FEEDSCREW MOUNT**	**REF**
19-INDEXING SYSTEM	**REF**	**830-04-006**	**ASSEMBLY - INA ROLLER CARRIAGE PLATE ASSEMBLY**	**REF**
19-INDEXING SYSTEM	**REF**	**830-04-008**	**ASSEMBLY - INA ROLLER CARRIAGE PLATE ASSEMBLY**	**REF**
19-INDEXING SYSTEM	12/04/14	2608-51	SLEEVE - FEED SCREW TIMING	6
19-INDEXING SYSTEM	12/04/14	5199-05-106-2	GUIDE - FEED SCREW LEAD	1
19-INDEXING SYSTEM	12/04/14	5199-05-106-3	GUIDE - FEED SCREW LEAD (OPPOSITE)	1
19-INDEXING SYSTEM	12/04/14	5228-19-112	PULLEY - DRIVEN	2
19-INDEXING SYSTEM	12/04/14	5267-20-112	HOUSING - TAIL END BEARING	2
19-INDEXING SYSTEM	12/04/14	5267-20-119	PLATE - GEARBOX MOUNT	2
19-INDEXING SYSTEM	12/04/14	5398-19-100	PLATE - GEARBOX SPACER	2
19-INDEXING SYSTEM	12/04/14	5580-19-102	WELDMENT - FEED SCREW DRIVE SHAFT	2
19-INDEXING SYSTEM	12/04/14	5580-19-103	WELDMENT - FEED SCREW TAIL SHAFT	2
19-INDEXING SYSTEM	12/04/14	SPACER	(A09-S-1.000-0.422-0.179) BEARING END	2
19-INDEXING SYSTEM	12/04/14	SPACER	(A09-S-1.000-0.790-0.430) BEARING	4
19-INDEXING SYSTEM	02/24/15	100-38-102	SPINDLE - SIZE 52 ROLLER	32
19-INDEXING SYSTEM	02/24/15	5178-04-139	PLATE - SIKO MOUNT	2
19-INDEXING SYSTEM	02/24/15	5624-04-111	BLOCK - VERT + HORIZ ADJUSTMENT	4
19-INDEXING SYSTEM	02/24/15	5624-19-102	RAIL - TRANSFER SUPPORT	2
19-INDEXING SYSTEM	02/24/15	5624-19-103	CHANNEL - INDEXING CARRIAGE TIE	2
19-INDEXING SYSTEM	02/24/15	5624-19-105	SCREW SHAFT - HORIZONTAL ADJUST @ HANDLE	2

Fabrication Parts

SECTION	DATE	PART NO.	DESCRIPTION	QTY
19-INDEXING SYSTEM	02/24/15	5624-19-106	SCREW SHAFT - HORIZONTAL ADJUST	2
19-INDEXING SYSTEM	02/24/15	5624-19-107-2	ANGLE - SIDE ADJ BRACE	1
19-INDEXING SYSTEM	02/24/15	5624-19-107-3	ANGLE - SIDE ADJ BRACE	1
19-INDEXING SYSTEM	02/24/15	5624-19-108	IDLER SPINDLE - VETICAL ADJ CHAIN	2
19-INDEXING SYSTEM	02/24/15	5624-19-109	ANGLE - MOUNT BRACE	4
19-INDEXING SYSTEM	02/24/15	5624-19-110	SCREW SHAFT - VERT ADJUST @ HANDLE	2
19-INDEXING SYSTEM	02/24/15	5624-19-111	SCREW SHAFT - VERTICAL ADJUST @ HANDLE	2
19-INDEXING SYSTEM	02/24/15	5624-19-112	WELDMENT - TRANSFER VERTICAL SUPPORT	2
19-INDEXING SYSTEM	02/24/15	5624-19-114	RAIL - VERT SUPPORT	4
19-INDEXING SYSTEM	02/24/15	5624-19-115-2	BAR - FEEDSCREW MOUNT	1
19-INDEXING SYSTEM	02/24/15	5624-19-115-3	BAR - FEEDSCREW MOUNT	1
19-INDEXING SYSTEM	02/24/15	5624-19-117	PLATE - SIKO MOUNT	2
19-INDEXING SYSTEM	02/24/15	5624-19-118-2	HOUSING - DRIVE END BEARING	1
19-INDEXING SYSTEM	02/24/15	5624-19-118-3	HOUSING - DRIVE END BEARING	1
19-INDEXING SYSTEM	02/24/15	830-04-100	PLATE - INA BEARING MOUNT	4
19-INDEXING SYSTEM	02/24/15	830-04-110	SPROCKET - PANEL ADJUST	8
19-INDEXING SYSTEM	02/24/15	830-04-118	IDLER SPINDLE - VETICAL ADJ CHAIN	2
19-INDEXING SYSTEM	02/24/15	830-04-119	IDLER - VERTICAL ADJ CHAIN	2
19-INDEXING SYSTEM	02/24/15	SPACER	M10-S-1.000-M10-1.322-M10 (drive brg mount)	4
19-INDEXING SYSTEM	02/24/15	SPACER	A09-S-0.500-0.281-0.438 (siko plate)	4
19-INDEXING SYSTEM	02/24/15	SPACER	A09-S-0.750-0.265-0.750 (siko mount)	2
19-INDEXING SYSTEM	02/24/15	SPACER	A09-S-0.750-0.422-0.250 (vert ina track)	8
19-INDEXING SYSTEM	02/24/15	SPACER	A09-S-0.875-0.265-0.179 (idler capt)	4
19-INDEXING SYSTEM	02/24/15	SPACER	A09-S-1.000-0.422-0.179 (idler brg capt)	2
19-INDEXING SYSTEM	02/24/15	SPACER	A09-S-1.000-0.422-0.500 (main mount bracket)	8
19-INDEXING SYSTEM	02/24/15	SPACER	A09-S-1.000-0.790-0.430(brg lube spcr)	4
19-INDEXING SYSTEM	02/24/15	SPACER	A09-S-1.125-0.265-0.120 (acme shaft capt.)	4
19-INDEXING SYSTEM	03/11/15	SPACER	A09-S-0.500-0.265-0.750 (siko mount)	2
19-INDEXING SYSTEM	03/12/15	2608-51	SLEEVE - FEED SCREW TIMING (6 more, 12 total)	6
19-INDEXING SYSTEM	03/17/15	5172-04-123	SCALE - SIDE GUIDE ADJUST	2
19-INDEXING SYSTEM	03/17/15	5624-19-119	CHANNEL - FEEDSCREW O.H. UPRIGHT	2
19-INDEXING SYSTEM	03/17/15	5624-19-120	WELDMENT - FEEDSCREW O.H. @ FEEDSCREW PIVOT	2
19-INDEXING SYSTEM	03/17/15	5624-19-124	BLOCK - FEEDSCREW O.H. PIVOT	2
19-INDEXING SYSTEM	03/17/15	5624-19-125	PLATE - O.H. RAIL AT INDEX	1
19-INDEXING SYSTEM	03/17/15	5624-20-125	POINTER	2
19-INDEXING SYSTEM	03/17/15	SPACER	M10-H-0.750-M8-21.640-M8 (o.h. lift brace handle)	1
19-INDEXING SYSTEM	03/17/15	SHAFT	A23-0.500-2.250 (pivot)	2
19-INDEXING SYSTEM	03/17/15	NUTPLATE	M24-S-3.609-4.250-1.000-0.250-M6	2
19-INDEXING SYSTEM	03/21/15	830-04-119	IDLER - VERTICAL ADJ CHAIN	2
19-INDEXING SYSTEM	03/21/15	SPACER	A09-S-0.875-0.265-0.179	2
19-INDEXING SYSTEM	03/27/15	5624-19-127	ANGLE - INDEX O.H. BRACE	2
19-INDEXING SYSTEM	03/27/15	SPACER	A09-S-0.750-0.344-0.750 (brace mount)	2
19-INDEXING SYSTEM	04/06/15	830-04-119	IDLER - VERTICAL ADJ CHAIN	2
19-INDEXING SYSTEM	04/06/15	5624-19-128	IDLER SPINDLE - VERTICAL ADJ CHAIN	2
19-INDEXING SYSTEM	04/06/15	5624-19-129	PLATE - IDLER MOUNT	2
19-INDEXING SYSTEM	04/06/15	SPACER	A09-S-0.875-0.265-0.179 (idler capt)	2
19-INDEXING SYSTEM	05/22/15	5624-19-132	BAR - O.H. LATCH MOUNT	1
19-INDEXING SYSTEM	05/22/15	5624-19-134	WELDMENT - LATCH MOUNT	1
19-INDEXING SYSTEM	05/22/15	5624-19-135	O.H. LATCH @ INDEXER	1

Fabrication Parts

SECTION	DATE	PART NO.	DESCRIPTION	QTY
19-INDEXING SYSTEM	05/22/15	5624-19-136	SPACER - O.H. LATCH WEIGHT	1
19-INDEXING SYSTEM	05/22/15	SPACER	11-S-0.500-0.344-0.520-2-XX (pivot)	1
19-INDEXING SYSTEM	06/24/15	5624-19-137	ANGLE - INFEED PLOW	1
20-INFEED CONVEYOR	**REF**	**5624-20-002**	**ASSEMBLY - INFEED COVNEYOR**	**REF**
20-INFEED CONVEYOR	**REF**	**5624-20-003**	**ASSEMBLY - INFEED LEG**	**REF**
20-INFEED CONVEYOR	01/16/15	5304-20-124	WELDMENT - CASTER MOUNT	2
20-INFEED CONVEYOR	01/16/15	5304-20-125	CHANNEL - CASTER MOUNT BRACE	2
20-INFEED CONVEYOR	01/16/15	5624-03-131	WELDMENT - CONVEYOR LEG	2
20-INFEED CONVEYOR	01/16/15	5624-20-101	TABLE TOP CHAIN RIVE SPROCKET	2
20-INFEED CONVEYOR	01/16/15	5624-20-104	UNI FINGER PLATE	2
20-INFEED CONVEYOR	01/16/15	5624-20-106	TRACK - INFEED CHAIN GUIDE LOWER	1
20-INFEED CONVEYOR	01/16/15	5624-20-108	BACKPLATE - INFEED T.T. RETURN	1
20-INFEED CONVEYOR	01/16/15	5624-20-110	PLATE - LOWER TRACK SUPPORT	1
20-INFEED CONVEYOR	01/16/15	5624-20-111	BAR - INFEED CROSSMEMBER	13
20-INFEED CONVEYOR	01/16/15	5624-20-112	PLATE - MOTOR MOUNT	1
20-INFEED CONVEYOR	01/16/15	5624-20-113	CHANNEL - INFEED TRANSFER MOUNT	1
20-INFEED CONVEYOR	01/16/15	5624-20-114	WELDMENT - INFEED SIDE GUIDE	2
20-INFEED CONVEYOR	01/16/15	5624-20-116	SHAFT - CONVEYOR DRIVE	1
20-INFEED CONVEYOR	01/16/15	5624-20-117	SHAFT - CONVEYOR IDLE	1
20-INFEED CONVEYOR	01/16/15	5624-20-118	MOUNT - SIDE GUIDE	6
20-INFEED CONVEYOR	01/16/15	NUTPLATE	M24-S-1.500-2.500-0.750-0.250-M6 (backplate mount)	2
20-INFEED CONVEYOR	01/16/15	SPACER	M10-S-1.000-M10-1.820-M10 (leg mount)	4
20-INFEED CONVEYOR	01/16/15	SPACER	A09-S-1.000-0.344-0.250 (side guide upright)	12
20-INFEED CONVEYOR	01/16/15	SPACER	A09-S-1.000-0.422-0.750 (motor mount)	2
20-INFEED CONVEYOR	01/16/15	SPACER	A09-S-1.000-0.468-0.250 (bearing spacer)	8
20-INFEED CONVEYOR	01/16/15	SPACER	M10-A-1.000-M8-1.938-M8 (caster mount)	8
20-INFEED CONVEYOR	01/16/15	SPACER	M10-S-1.000-M10-4.500-M10 (motor and index mount brace)	4
20-INFEED CONVEYOR	01/16/15	SPROCKET	M01-S-401-18-25 (conveyor drive driven)	2
20-INFEED CONVEYOR	01/22/15	5624-20-100	BAR - FINGER MOUNT CROSSBAR	1
20-INFEED CONVEYOR	01/22/15	5624-20-103-2	PANEL - INFEED SIDE	1
20-INFEED CONVEYOR	01/22/15	5624-20-103-3	PANEL - INFEED SIDE	1
20-INFEED CONVEYOR	01/22/15	5624-20-105	TRACK - INFEED CHAIN GUIDE UPPER	1
20-INFEED CONVEYOR	01/22/15	5624-20-107	PLATE - TRANSFER	1
20-INFEED CONVEYOR	01/22/15	5624-20-109	PLATE - UPPER TRACK SUPPORT	1
20-INFEED CONVEYOR	02/27/15	SPACER	M10-S-1.000-M10-1.820-M10 (leg mount)	4
20-INFEED CONVEYOR	03/03/15	NUTPLATE	M24-S-1.125-1.500-1.000-0.250-M8 (SIDE GUIDE MOUNT)	2
20-INFEED CONVEYOR	03/16/15	5154-22-125	VERTICAL HANDLE CLAMP S.S.	2
20-INFEED CONVEYOR	03/16/15	5154-21-137	PLATE - INDEX O.H. LOCK	2
20-INFEED CONVEYOR	03/16/15	5172-04-123	SCALE - SIDE GUIDE ADJUST	7
20-INFEED CONVEYOR	03/16/15	5172-04-134	POINTER - O.H. SCALE	3
20-INFEED CONVEYOR	03/16/15	5267-19-129	WELDMENT - IO.H. CLAMP MOUNT	2
20-INFEED CONVEYOR	03/16/15	5624-20-121	ANGLE - O.H. MOUNT	1
20-INFEED CONVEYOR	03/16/15	5624-20-124	ANGLE - O.H. GUIDE	1
20-INFEED CONVEYOR	03/16/15	5624-20-125	POINTER	4
20-INFEED CONVEYOR	03/26/15	SPACER	A09-S-1.000-0.344-0.875 (o.h. mount) (rework)	4
20-INFEED CONVEYOR	03/16/15	NUTPLATE	M24-S-0.750-1.313-0.625-0.250-M8 (o.h.mount)	2
20-INFEED CONVEYOR	03/16/15	SPACER	M10-S-0.750-M6-16.322-M6	1
21-ROBOTICS	**REF**	**5624-21-002**	**ASSEMBLY - TRACKING ENCODER**	**REF**
21-ROBOTICS	02/17/15	5598-03-157	SPUR GEAR (PINION)- ENCODER	1
21-ROBOTICS	02/17/15	5598-03-164	SPUR GEAR (DRIVER) - ENCODER DRIVE	1

Fabrication Parts

SECTION	DATE	PART NO.	DESCRIPTION	QTY
21-ROBOTICS	02/17/15	5624-21-101	SPUR GEAR HUB	1
21-ROBOTICS	02/20/15	5624-21-101	SPUR GEAR HUB	1
21-ROBOTICS	02/27/15	5624-21-102	ENCODER MOUNT	2
21-ROBOTICS	02/27/15	5308-17-119	PLATE, ENCODER BACK SUPPORT	2
21-ROBOTICS	02/27/15	SPACER	M10-S-0.500-M6-2.563-M6 (ENCODER MOUNT)	4
21-ROBOTICS	03/13/15	5598-03-157	SPUR GEAR (PINION)- ENCODER	1
22-ROBOT FRAME	**01/20/15**	**5624-22-001**	**ASSEMBLY - ROBOT CELL**	**REF**
22-ROBOT FRAME	01/20/15	5624-22-101	WELDMENTS - ROBOT FRAME	1
22-ROBOT FRAME	01/20/15	5624-22-102	WELDMENTS - ROBOT MOUNT	1
22-ROBOT FRAME	01/20/15	5624-22-104	ROBOT CONTROLLER BRACKET	2
22-ROBOT FRAME	02/05/15	SPACER	M10-S-1.000-M10-0.750 (part of weldment)	4
22-ROBOT FRAME	2/17/2015	5598-22-101	SPACER - WIRE BASKET CLAMP	15
22-ROBOT FRAME	2/17/2015	5598-22-102	CLAMP - WIRE BASKET	15
22-ROBOT FRAME	2/17/2015	5624-22-116	WIRE BASKET - CF30/60, 43.3125"	2
22-ROBOT FRAME	2/17/2015	5624-22-117	WIRE BASKET - CF30/60, 67"	1
22-ROBOT FRAME	2/17/2015	5624-22-118	WIRE BASKET - CF30/60, 16"	3
22-ROBOT FRAME	3/27/2015	5624-22-122	MOUNT ENCLOSURE DISCONNECT SWITCH	1
22-ROBOT FRAME	4/16/2015	5624-22-123	R-30iA CONTROLLER BRACKET	1
23-EOAT	**03/26/15**	**5624-23-002**	**END OF ARM TOOLING ASSEMBLY**	**REF**
23-EOAT	03/26/15	5624-23-103	END OF ARM TOOL	1
23-EOAT	03/26/15	5624-23-104	PIVOT ARM (EOAT)	2
23-EOAT	03/26/15	5624-23-105	SPINDLE (EOAT)	2
23-EOAT	03/31/15	5624-23-107	BUSHING/SPRING GUIDE	2
23-EOAT	04/01/15	5624-23-108	VACUUM GENERATOR MOUNT	1
23-EOAT	04/01/15	5624-23-109	VACUUM JUNCTION BOX MOUNT	1
23-EOAT	04/01/15	5624-23-113	VACUUM HOSE AND SIGNAL CABLE MOUNT	1
23-EOAT	04/16/15	5624-23-117	WELDMENT - VACUUM HOSE AND SIGNAL WIRE MOUNT	1
23-EOAT	04/16/15	5624-23-119	WELDMENT-VACUUM HOSE AND SIGNAL CABLE MOUNT	1
23-EOAT	06/10/15	5624-23-120	EOAT PRODUCT STABILIZER	2
23-EOAT	06/11/15	5624-23-121	EOAT PRODUCT STABILIZER	2
23-EOAT	06/22/15	5624-23-122	PIVOT ARM STOPPER(EOAT)	2
24-ROBOT GUARDS	**01/21/15**	**5624-24-001**	**ASSEMBLY - LEFT GUARD DOOR**	**REF**
24-ROBOT GUARDS	**01/21/15**	**5624-24-002**	**ASSEMBLY - RIGHT GUARD DOOR**	**REF**
24-ROBOT GUARDS	01/21/15	5624-24-101-2	WELDMENTS - LEFT GUARD DOOR	2
24-ROBOT GUARDS	01/21/15	5624-24-101-3	WELDMENTS - RIGHT GUARD DOOR	2
24-ROBOT GUARDS	01/21/15	5624-24-111	SENSOR MOUNT	4
24-ROBOT GUARDS	01/21/15	5624-24-109	DOOR CATCH MOUNT	8
24-ROBOT GUARDS	01/21/15	100-39-109	HINGE, UPPER GUARD DOOR	12
24-ROBOT GUARDS	04/16/15	SPACER	MAGNETIC SENSOR SPACER (A09-S-0.375-0.281-0.750	8
24-ROBOT GUARDS	04/16/15	5624-24-109	DOOR CATCH MOUNT	4
24-ROBOT GUARDS	04/16/15	5624-24-115	WINDOW DOOR - 3/8" LEXAN	4
24-ROBOT GUARDS	04/21/15	5624-24-114	NUTBAR - DOOR HANDLE	4
24-ROBOT GUARDS	04/21/15	5624-24-116-2	HANDLE GUARD DOOR - LEFT	2
24-ROBOT GUARDS	04/21/15	5624-24-116-3	HANDLE GUARD DOOR - RIGHT	2
24-ROBOT GUARDS	04/22/15	5426-16-170	GUARD DOOR STOP	4
24-ROBOT GUARDS	04/22/15	5178-16-180	SPACER - STOP BUMPER	4
24-ROBOT GUARDS	05/18/15	5624-24-117	GUARD INFEED TOP ROBOT FRAME	1
24-ROBOT GUARDS	05/18/15	5624-24-118	GUARD ROBOT FRAME INFEED R/H	1
24-ROBOT GUARDS	05/18/15	5624-24-119	GUARD ROBOT FRAME INFEED L/H	1

PURCHASE PARTS

SECTION	DATE	ADCO#	BRAND	CATALOG NO.	DESCRIPTION	QTY
01-MAIN FRAME	01/20/15	48010	CLOVIS CASTER	43PH50JB0419	5" DIA. PHENOLIC CASTER, 6 1/2" TALL	4
01-MAIN FRAME	01/20/15	48083	NGI	HJ110-1-1/4"	FOOT, 1-1/4" UNC X 10" LG SS	4
02-MAIN DRIVE	01/06/15	51226	LOVEJOY	11075	SPIDER - SS095 COUPLING URETHANE - OPEN CENTER	2
02-MAIN DRIVE	01/06/15	47846	McMASTER CARR	3369K27	COLLAR - Ø35mm SS 2-PIECE CLAMP	1
02-MAIN DRIVE	01/06/15	57350	MISUMI	SSCSLS35-43	Shaft Collars - Bearing Inner Race Mount, Slit, 35mm BORE, S.S.	2
02-MAIN DRIVE	01/06/15	39090	MRC	R-10ZZST	BEARING - Ø5/8" RADIAL SS	6
02-MAIN DRIVE	01/06/15	57348	NORDGEAR	SK12063 AF SM5 -100L/4 NSD+	RIGHT ANGLE HELICAL WORM GEARMOTOR, 3hp MOTOR, 15.57:1 RATIO = 110 OUTPUT RPM, AF (B5 flange) MOUNT, M3 MOUNT POS. W/ TERM. BOX @ 4, NSD+ PAINT, S.S. 35mm HOLLOW BORE	1
02-MAIN DRIVE	01/06/15	57331	R+W	SKP/200/W/35/100/60-160/SS	TORQUE LIMITER - SKP MODEL, 200 SERIES, SINGLE POSTION ENGAGEMENT, 35mm BORE, 100Nm DISENGAGEMENT TORQUE, 60-160Nm ADJUST RANGE, STAINLESS STEEL	1
02-MAIN DRIVE	01/06/15	30166	SPICER	5-170X	CROSS & BEARING KIT	13
02-MAIN DRIVE	01/06/15	39646	SPIROLOX	RR-137-S	RETAINING RING - SS INTERNAL	6
02-MAIN DRIVE	01/06/15	54323	WC BRANHAM	4303-0031	GEARBOX - SPIRAL BEVEL 1:1, 4.125 WIDE, 3 WAY, 25MM S.S. SHAFTS [FOOD GRADE GREASE]	4
02-MAIN DRIVE	01/06/15	52996	WC BRANHAM	4304-0908	Gearbox, Right Angle, Glide Right, T-O-M S-R Metric, 25mm to 30mm R/H	1
02-MAIN DRIVE	01/06/15	52997	WC BRANHAM	4304-0909	Gearbox, Right Angle, Glide Right, T-O-M S-R Metric, 25mm to 30mm L/H	1
02-MAIN DRIVE	02/24/15	56072	IPTCI	SUCSFB 207	BEARING - Ø35mm 3-HOLE FLANGE - ALL STAINLESS	1
02-MAIN DRIVE	02/24/15	51423	IPTCI	SUCSFL 207	BEARING - Ø35mm 2 HOLE FLANGE ALL STAINLESS	1
02-MAIN DRIVE	02/24/15	57531	IPTCI	SUCSP 207	BEARING - Ø35mm PILLOW BLOCK ALL STAINLESS	1
02-MAIN DRIVE	02/24/15	57532	IPTCI	SUCSP206	BEARING - Ø30mm PILLOW BLOCK ALL STAINLESS	3
03-PRODUCT CONVEYOR	01/20/15	30332	CASTER INC.	# 43209339	B/B SWIVEL CASTER (4 1/4" HIGH x 3" DIA.)	2
03-PRODUCT CONVEYOR	01/20/15	38571	CENTURY SPRING	11119	COMPRESSION SPRING (.220 WIRE DIA. X 1.609 O.D. X 2 13/32 FREE LENTGH) STN./STL.	2
03-PRODUCT CONVEYOR	01/20/15	57402	MISUMI	SSCSBS25-31	SHAFT COLLAR - LONG NOSE, S.S. Ø 25mm	2
03-PRODUCT CONVEYOR	01/20/15	39090	MRC	R-10ZZST	BEARING - Ø5/8" RADIAL SS	2
03-PRODUCT CONVEYOR	01/20/15	42934	NGI	HJ90-1"-10"	FOOT, ARTICULATED S.S. (Ø 1" UNC X 10" LG)	2
03-PRODUCT CONVEYOR	01/20/15	52395	SKF	SS 6005-2RS1	DBL. SEALED RADIAL BRG.- 25mm BORE STAINLESS STEEL	2
03-PRODUCT CONVEYOR	01/20/15	39646	SPIROLOX	RR-137-S	RETAINING RING - SS INTERNAL	2
03-PRODUCT CONVEYOR	01/20/15	44519	SPIROLOX	RR-185-S	RETAINING RING - SS INTERNAL	2
03-PRODUCT CONVEYOR	02/24/15	49697	IPTCI	SUCSFL205	BEARING - Ø25mm 2 HOLE FLANGE ALL STAINLESS	2
03-PRODUCT CONVEYOR	02/26/15	38457	HKK	ADC-060-R1	AQUA C2060H DOUBLE PITCH ROLLER CHAIN (5624-03-149)	338"
03-PRODUCT CONVEYOR	03/28/15	51998	KIPP	06454-208	8mm, ADJUSTABLE HANDLE, STAINLESS STEEL, FEMALE, SMALL	4

PURCHASE PARTS

SECTION	DATE	ADCO#	BRAND	CATALOG NO.	DESCRIPTION	QTY
03-PRODUCT CONVEYOR	03/28/15	57644	McMASTER CARR	92558A170	Knurled Head Thumb Screw, Straight Shoulder, M5 Thread, 16mm Long	2
03-PRODUCT CONVEYOR	04/02/15	51998	KIPP	06454-208	8mm, ADJUSTABLE HANDLE, STAINLESS STEEL, FEMALE, SMALL	16
03-PRODUCT CONVEYOR	06/24/15	42633	SPD	HA11387	HANDLE - WIRE PULL SS	1
04-SLEEVE TRANSFER	12/10/14	36942	CENTURY SPRING	S-3033	COMPRESSION SPRING	2
04-SLEEVE TRANSFER	12/10/14	45828	IPTCI	SSER-204	INSERT BEARING - 20MM ID X 47MM OD X 15.9MM WIDE SS	4
04-SLEEVE TRANSFER	12/10/14	57351	MISUMI	SBGRN6004ZZ	Bearings with Housings - Direct Mount, Unretained, 20mm, S.S.	2
04-SLEEVE TRANSFER	12/10/14	56749	MISUMI	SSCJKJL20-M	Shaft Collars - With Clamp Lever, Side Mount, 20mm Bore, S.S. orange Handle	2
04-SLEEVE TRANSFER	12/10/14	52210	SIKO	DA09S-02-20-O-I-VA20-O-A-K-OAD-OZP	DIGITAL INDICATOR, S.S. BORE, 02 MOUNT POSITION, CLOCKWISE INCREASING, (in/out)	2
04-SLEEVE TRANSFER	12/10/14	45160	SIKO	DA09S-04-20-O-E-VA20-O-A-K-OAD-OZP	DIGITAL INDICATOR, S.S. BORE, 04 MOUNT POSITION, CLOCKWISE DECREASING, (elev.)	2
04-SLEEVE TRANSFER	12/10/14	52797	SKF	W 6004-2RS1	DBL. SEALED RADIAL BRG.- 20mm BORE STAINLESS STEEL	8
04-SLEEVE TRANSFER	12/10/14	44897	SPIROLOX	RR165SS	RETAINING RING	4
04-SLEEVE TRANSFER	12/10/14	47665	TOLOMATIC	0124-0410	COMPACT GB - SLIDE RITE 1:1 RATIO (15mm TO 15mm BORE) RH DRIVE	1
04-SLEEVE TRANSFER	12/10/14	48349	TOLOMATIC	0125-0410	COMPACT GB - SLIDE RITE 1:1 RATIO (15mm TO 15mm BORE) LH DRIVE	1
04-SLEEVE TRANSFER	02/24/15	51491	IPTCI	SUCSFL 204	2-BOLT FLANGE BRG. - 20mm BORE ALL STAINLESS	4
05-ROTARY FEEDER	11/25/14	41855	CARTER	SY-40-S	BEARING - YOKE ROLLER Ø1-1/4" OD X Ø3/8" ID STAINLESS STEEL	5
05-ROTARY FEEDER	11/25/14	30057	DURKEE-ATWOOD	322L050	GEARBELT	1
05-ROTARY FEEDER	11/25/14	31623	DURKEE-ATWOOD	420L050	GEARBELT	1
05-ROTARY FEEDER	11/25/14	56641	GARLOCK	GM2428-32	GARMAX FIBER WOUND BEARING Ø 1 1/2" I.D. X 2" long (830-05-026)	1
05-ROTARY FEEDER	11/25/14	51203	GEAR ENTERPRISES	SPECIAL	PULLEY - "L" PITCH - 60 TOOTH (5178-05-102)	1
05-ROTARY FEEDER	11/25/14	46634	IPTCI	SSER205	BEARING - Ø25mm SS INSERT	6
05-ROTARY FEEDER	11/25/14	49283	IPTCI	SSER207	BEARING - Ø35mm SS INSERT	2
05-ROTARY FEEDER	11/25/14	34202	LEGRIS	3175-60-14	1/4" NPT TO 3/8 TUBE	3
05-ROTARY FEEDER	11/25/14	53037	McMASTER CARR	5225K717	Metric Nylon & Nickel-Pltd Brass Tube Fitting Adapter for 10mm Tube OD X 1/4" NPT Pipe Size (3 spare)	6
05-ROTARY FEEDER	11/25/14	53038	McMASTER CARR	9355T42	Metric Extra-Flex Nylon Tubing 8mm ID, 10mm OD, 1mm Wall Thk, Semi-Clear White, 10 foot long	1
05-ROTARY FEEDER	11/25/14	51197	MISUMI	ATPK20L050-A-H25 QTC38-M6	PULLEY - "L" PITCH - 20 TOOTH (25MM BORE W/ 3 M6 TAPS) (SEND OUT FOR HARD ANODIZING)	3
05-ROTARY FEEDER	05/05/15		SMALLEY	C200-H3-S17	WAVE SPRING - STAINLESS STEEL 90lb LOAD, .75" FREE HEIGHT FOR 2.00" BORE	1
05-ROTARY FEEDER	11/25/14	48342	SMC	KXL10-03S	FITTING - 90° MALE ROTARY HI-SPEED 10mm TUBE - 3/8 RPT	3

PURCHASE PARTS

SECTION	DATE	ADCO#	BRAND	CATALOG NO.	DESCRIPTION	QTY
05-ROTARY FEEDER	06/09/15	30588		#58	#58 YELLOW SUCTION CUP	9
06-FEEDER MOUNT	12/03/14	40676	BECKER	VT4.25	OILLESS VACUUM PUMP, 1.2hp, 18CFM, 25in.Hg	1
06-FEEDER MOUNT	12/03/14	47969	INA	LFR 50/8 NPP RB	ROLLER, SIZE 32, WASHDOWN	12
06-FEEDER MOUNT	12/03/14	46634	IPTCI	SSER205	BEARING - Ø25mm SS INSERT	2
06-FEEDER MOUNT	12/03/14	56782	JOYCEDAYTON	WJ51I4K-08.50-STDX-STDX	INCH MACHINE SCREW JACK, 1 TON SIZE, 5:1 RATIO, INVERTED, MALE CLEVIS, KEYED, 8 1/2" RISE, STANDARD S.S. SHAFTS,	1
06-FEEDER MOUNT	12/03/14	50453	McMASTER CARR	6099K41	Set Screw Rigid Shaft Coupling S.S. (830-06-101)	1
06-FEEDER MOUNT	12/03/14	51213	McMASTER CARR	2988K121	BEARING - Ø6mm RH ROD END	1
06-FEEDER MOUNT	12/03/14	51214	McMASTER CARR	2988K122	BEARING - Ø6mm LH ROD END	1
06-FEEDER MOUNT	12/03/14	30532	McMASTER CARR	91590A135	RETAINING RING - Ø1-1/8" SS EXTERNAL	1
06-FEEDER MOUNT	12/03/14	57352	MISUMI	HTBN 1080-S8M-250	GEARBELT - S8M HIGH TORQUE 135 TOOTH - 1080mm LG X 25mm WIDE	1
06-FEEDER MOUNT	12/03/14	52646	MISUMI	HTPK24S8M250-A-N25	PULLEY - S8M HIGH TORQUE PITCH, 24 TOOTH, 25mm WIDE BELT, HARD ANNODIZE, 25mm BORE W/ KEYWAY & SETSCREW	1
06-FEEDER MOUNT	12/03/14	57353	MISUMI	SSCDKL16-M	Shaft Collars - With Clamp Lever, Side Mount 16mm	1
06-FEEDER MOUNT	12/03/14	51602	SIKO	DA09S-07-4-0-E-VA16-O-A-K-AD-OZP-BP-ORP	DIGITAL COUNTER - 4 COUNTS/TURN 16mm BORE - SS COLLAR CCW ROTATION INCREASE (FEEDER ADJUST)	1
06-FEEDER MOUNT	12/03/14	52884	WC BRANHAM	4304-0906	STANDARD GB - GLIDE RITE 1:1 RATIO (25mm TO 25mm BORE) RH DRIVE	1
07-SLEEVE MAGAZINE	12/06/14	38161	HABASIT	C0040K0079DPAA+001	HabaCHAIN Miniature 40P (Straight) 10ft BOX	2
07-SLEEVE MAGAZINE	12/06/14	51998	KIPP	06454-208	8mm, ADJUSTABLE HANDLE, STAINLESS STEEL, FEMALE, SMALL	2
07-SLEEVE MAGAZINE	12/06/14	39845	McKNIGHT	15AT846	#40-18 TOOTHLESS IDLER (15AT846)	2
07-SLEEVE MAGAZINE	12/06/14	43260	McMASTER CARR	91590A133	RETAINING RING - Ø1" EXTERNAL SS	2
07-SLEEVE MAGAZINE	12/06/14	57349	NORDGEAR	1SMID31AZ-63L/4 CUS	GEARMOTOR, 0.25 HP, 60:1 RATIO, M3 MOUNT, NSD+ PAINT, TEFC, T. BOX @ 4, 230/460V 60HZ	1
07-SLEEVE MAGAZINE	12/06/14	51274	SIKO	DA09S-07-2-0-E-VA20-O-A-K-AD-OZP-BP-ORP	DIGITAL COUNTER - 2 COUNTS/TURN 20mm BORE - SS COLLAR CCW ROTATION INCREASE (SIDE GUIDE & HORIZONTAL ADJUST)	2
07-SLEEVE MAGAZINE	12/06/14	42633	SPD	HA11387	HANDLE - WIRE PULL SS	10
07-SLEEVE MAGAZINE	12/06/14	38297		SSR-4A2RS	BEARING - Ø1/4" SS RADIAL	8
08-MAGAZINE MOUNT	12/09/14	40633	CARTER	SC-32-SB	CAM FOLLOWER - Ø1" ROLLER 7/16" SHOULDER - SS	4
08-MAGAZINE MOUNT	12/09/14	47090	CARTER	SY-32-SB	YOKE FOLLOWER - Ø1" ROLLER - SS	4
08-MAGAZINE MOUNT	12/09/14	56783	JOYCEDAYTON	WJ51U1N-12.00-STDX-STDX	INCH MACHINE SCREW JACK, 1 TON SIZE, 5:1 RATIO, UPRIGHT, PLAIN END, TRAVELING NUT, 12" RISE, STANDARD S.S. SHAFTS	2
08-MAGAZINE MOUNT	12/09/14	45252	McMASTER CARR	90967A235	RETAINING RING - Ø20mm SS EXTERNAL	1

PURCHASE PARTS

SECTION	DATE	ADCO#	BRAND	CATALOG NO.	DESCRIPTION	QTY
08-MAGAZINE MOUNT	12/09/14	43260	McMASTER CARR	91590A133	RETAINING RING - Ø1" EXTERNAL SS	2
08-MAGAZINE MOUNT	12/09/14	50102	SIKO	DA09S-02-4-0-E-VA20-O-A-K-AD-OZP-BP-ORP	DIGITAL COUNTER - 4 COUNTS/TURN 20mm BORE - SS COLLAR CCW ROTATION INCREASE (HOPPER VERTICAL ADJUST)	1
08-MAGAZINE MOUNT	03/09/15		McMASTER CARR	90269A151	SHOULDER SCREW - Ø8mm X 12mm LG SS	6
08-MAGAZINE MOUNT	03/09/15		McMASTER CARR	91585A120	DOWEL PIN - Ø5mm X 20mm LG SS	6
08-MAGAZINE MOUNT	03/09/15	51996	KIPP	06454-106	KIPP, 6mm ADJ HANDLE, FEMALE SS	6
09-OH CONVEYOR	12/11/14	38571	CENTURY SPRING	11119	SPRING - SS COMPRESSION	2
09-OH CONVEYOR	12/11/14	46634	IPTCI	SSER205	BEARING - Ø25mm SS INSERT	2
09-OH CONVEYOR	12/11/14	56784	JOYCEDAYTON	WJ51I1N-18.00-STDX-STDX	INCH MACHINE SCREW JACK, 1 TON SIZE, 5:1 RATIO, INVERTED, PLAIN END, TRAVELING NUT, 18" RISE, STANDARD S.S. SHAFTS,	2
09-OH CONVEYOR	12/11/14	54344	McMASTER CARR	60635K92	Pinhole-Disc Coupling Hub 3/4" Bore, 2-3/16" Outside Diameter (5580-09-107)	2
09-OH CONVEYOR	12/11/14	52508	McMASTER CARR	60635K94	Pinhole-Disc Coupling Hub 1/2" Bore, 2-3/16" Outside Diameter (5580-09-108)	2
09-OH CONVEYOR	12/11/14	52509	McMASTER CARR	60635K99	Acetal Disc for 2-3/16" Outside Diameter HI-Misalignment Pinhole-Disc Coupling Hub	2
09-OH CONVEYOR	12/11/14	48559	McMASTER CARR	93715A615	THREADED INSERT - M8X1.25 SS KEY LOCKING	18
09-OH CONVEYOR	12/11/14	39090	MRC	R-10ZZST	BEARING - Ø5/8" S.S. RADIAL	2
09-OH CONVEYOR	12/11/14	57359	NORDGEAR	SK1SMID40AX - 80S/4-CUS	.75HP GEARMOTOR - 5:1 RATIO 342 RPM - S.S. Ø 20mm HOLLOW SHAFT - MOUNT POS. M1 - NSD+ PAINT 230-460V/3PH/60HZ	1
09-OH CONVEYOR	12/11/14	54323	WC BRANHAM	4303-0031	Spiral Bevel 3-Way Right Angle Gearbox with 4.125 in. Wide Housing, 1:1 Ratio, Base Mounting and 25mm Diameter Shafts	1
09-OH CONVEYOR	12/11/14	53465	ZERO-MAX	H-TLC-500-C 0.500 x 0.500 4 to 60	TORQ-TENDER TORQUE LIMITER, 500 SIZE, Ø 1/2" X Ø 1/2" BORES, 4 TO 60 In-lbs RANGE	1
09-OH CONVEYOR	02/24/15	57533	IPTCI	SUCSFB 204-12	BEARING - Ø 3/4" 3-HOLE FLANGE ALL STAINLESS	1
09-OH CONVEYOR	02/24/15	49697	IPTCI	SUCSFL205	BEARING - Ø25mm 2 HOLE FLANGE ALL STAINLESS	6
09-OH CONVEYOR	02/24/15	57633	IPTCI	SUCSP205	BEARING PILLOW BLOCKS - Ø25mm ALL STAINLESS	1
09-OH CONVEYOR	03/03/15	51491	IPTCI	SUCSFL 204	2-BOLT FLANGE BRG. - 20mm BORE ALL STAINLESS	3
09-OH CONVEYOR	03/03/15	57450	MISUMI	HTPK24S8M250-A-N20	TIMING PULLEY, S8M PITCH, 24t, 20mm BORE, "A" SHAPE, 25mm WIDE	2
09-OH CONVEYOR	03/03/15	57572	MISUMI	HTBN760S8M-250	TIMING BELT, S8M PITCH, 760mm LONG, 25mm WIDE	1
09-OH CONVEYOR	04/23/15	51998	KIPP	06454-208	8mm, ADJUSTABLE HANDLE, STAINLESS STEEL, FEMALE, SMALL	6
09-OH CONVEYOR	04/23/15	50909	McMASTER CARR	#6813A62	Stainless Steel Pocket Rule,150 mm Length (5172-04-123)	6

PURCHASE PARTS

SECTION	DATE	ADCO#	BRAND	CATALOG NO.	DESCRIPTION	QTY
09-OH CONVEYOR	05/05/15	50909	McMASTER CARR	#6813A62	Stainless Steel Pocket Rule,150 mm Length (5624-09-119)	6
09-OH CONVEYOR	06/04/15	57813	NORDGEAR	SK1SMID31AZ-63L4	GEARMOTOR, 0.25 HP, 30:1 RATIO, 56 R.P.M OUTPUT, M1 MOUNT, NSD+ PAINT, TEFC, 230/460V 60HZ, 14mm HOLLOW BORE, B14 FLANGED MOUNT, T.BOX @ 2	1
09-OH CONVEYOR	06/11/15	50909	McMASTER CARR	#6813A62	Stainless Steel Pocket Rule,150 mm Length (5172-04-123)	6
10-O.H. CONV MODS	02/18/15	50579	McMASTER CARR	92384A032	QUICK RELEASE PIN - Ø1/4" X 1/2" LG (REMOVE PULL RING)	48
11-SIDE CLOSE BCL	12/30/14	53608	ADCO		ROLLER, SIZE 52, WASHDOWN (100-38-011)	16
11-SIDE CLOSE BCL	12/30/14	47726	CARTER	SCH-24-SB	3/4" HEAVY DUTY CAM FOLLOWER - STAINLESS STEEL, 7/16" SHANK	34
11-SIDE CLOSE BCL	12/30/14	47969	INA	LFR 50/8 NPP RB	ROLLER, SIZE 32, WASHDOWN	136
11-SIDE CLOSE BCL	12/30/14	48524	IPTCI	SSER-206	INSERT BEARING - 30MM ID X 62MM OD X 22MM WIDE SS	4
11-SIDE CLOSE BCL	12/30/14	52210	SIKO	DA09S-02-20-O-I-VA20-O-A-K-OAD-OZP	DIGITAL INDICATOR, S.S. BORE, 02 MOUNT POSITION, CLOCKWISE INCREASING, (in/out)	2
11-SIDE CLOSE BCL	02/19/15	50579	McMASTER CARR	92384A032	QUICK RELEASE PIN - Ø1/4" X 1/2" LG (REMOVE PULL RING)	34
11-SIDE CLOSE BCL	02/24/15	51491	IPTCI	SUCSFL204	2 HOLE FLANGE BRG - Ø20mm, ALL STAINLESS	4
11-SIDE CLOSE BCL	02/24/15	51534	IPTCI	SUCSFL208	2 HOLE FLANGE BRG - Ø40mm, ALL STAINLESS	2
11-SIDE CLOSE BCL	03/03/15	57010	HKK	ADC-060-R-A2-EV	AQUA C2060H A2 ATTACHMENT ROLLER CHAIN (A2 AT EVERY PITCH)	612"
11-SIDE CLOSE BCL	03/21/15	39090	MRC	R-10ZZST	BEARING - Ø5/8" RADIAL SS	2
11-SIDE CLOSE BCL	03/21/15	39646	SPIROLOX	RR-137-S	RETAINING RING - SS INTERNAL	2
12-SQUARING CHAIN	02/04/15	36942	CENTURY SPRING	S-3033	STN/STL COMPRESSION SPRING (.148 DIA. x 1" O.D. x 1 3/4 FREE LG.)	1
12-SQUARING CHAIN	02/04/15	46634	IPTCI	SSER205	BEARING - Ø25mm SS INSERT	2
12-SQUARING CHAIN	02/04/15	39090	MRC	R-10ZZST	SEALED S.S. RADIAL BRG - 5/8" BORE	2
12-SQUARING CHAIN	02/04/15	45505	SKF	SS 61904-2RS1	DBL. SEALED RADIAL BRG.- 20mm I.D. 37mm O.D. 9mm WIDE S.S.	2
12-SQUARING CHAIN	02/04/15	45501	SPIROLOX	RR-145-S	INTERNAL RETAINING RING - S.S.	2
13-CLOSING PLOWS	03/13/15	57586	McMASTER CARR	4384K640	Type 303 Stainless Steel Four-Arm Knob M10 x 30mm Stainless Steel Stud	1
13-CLOSING PLOWS	04/17/15	52008	KIPP	06451-208	8mm, ADJUSTABLE HANDLE, ORANGE HANDLE SS, FEMALE, SMALL	1
14-DISCHARGE CONV	12/12/14	51767	HABASIT/KVP	SM605	BELT - STRAIGHT 1/2" PITCH SMOOTH TOP BLUE POM (ACETAL), 3" WIDE	10 FT.
14-DISCHARGE CONV	12/12/14	57357	NORDGEAR	SK1SMID31VZ-63L	1/4 HP GEARMOTOR - 224RPM (7.5:1 RATIO) - 14mm SOLID S.S. SHAFT - SIDE B - "M3" MOUNTING - NSD + PAINT - 230/460V-60Hz	1
14-DISCHARGE CONV	12/12/14	51771	SPIROLOX	RR-131-S	RETAINING RING S.S.	2
14-DISCHARGE CONV	02/24/15	54258	IPTCI	SUCSFB205	BEARING - Ø25mm 3 HOLE FLANGE ALL STAINLESS	2
14-DISCHARGE CONV	03/23/15	51907	SILVENT	9005W	FLAT AIR NOZZLE, 1/4" NPT, 3.3lbs BLOWING FORCE	1
14-DISCHARGE CONV	03/23/15	51908	SILVENT	PSK 14	ADJUSTABLE BALL JOINT, 1/4" NPT	1
14-DISCHARGE CONV	03/24/15	52008	KIPP	06451-208	8mm, ADJUSTABLE HANDLE, ORANGE HANDLE SS, FEMALE, SMALL	4

PURCHASE PARTS

SECTION	DATE	ADCO#	BRAND	CATALOG NO.	DESCRIPTION	QTY
15-SEALING SYSTEM	12/12/14	38966	NORDSON	143300	HOSE, 12FT GLUE (WASHDOWN CONSTRUCTION)	1
15-SEALING SYSTEM	12/12/14	47483	NORDSON	772033	GLUE PRESSURE CONTROLLER (TRANSDUCER) DIN RAIL MOUNTING	1
15-SEALING SYSTEM	12/12/14	46908	NORDSON	1039840	1.5 kva 460V TRANSFORMER FOR 460V PRO-BLUE 4/7/10	1
15-SEALING SYSTEM	12/12/14	54355	SAGINAW	SCE-8064CHNFSS	ENCLOSURE - 8" X 6" X 4" TYPE 4X (FOR TRANSDUCER)	1
15-SEALING SYSTEM	12/12/14	54356	SAGINAW	SCE-8P6	8" X 6" PANEL (FOR TRANSDUCER)	1
15-SEALING SYSTEM	02/06/15	57439	NORDSON	8517903	MINIBLUE II APPLICATOR, 230V, SD-SERIES 44 SOLENOID, .012" ORIFICE, 100 MESH - 45° CONN., WATERWASH CORDSET, WITH COVER CONFIGURATION CODE #MB2-BEL-00AIA-000-WTSSDF41-010-000-00	1
15-SEALING SYSTEM	02/06/15	38650	NORDSON	322412	Saturn Single Orifice Nozzle, 0.012" Ø	1
15-SEALING SYSTEM	02/27/15	57560	NORDSON	1123329	LIBERTY SERIES PROBLUE7 MELTER, 2 GUNS, 400/480V DELTA	1
15-SEALING SYSTEM	02/27/15	56401	NORDSON	1121952	BIN, ADH STORAGE, SF, G3	1
15-SEALING SYSTEM	02/27/15	57561	NORDSON	1121954	KIT, FF, ADH TRANS ASSY, 4M CL, G3	1
15-SEALING SYSTEM	02/27/15	57562	NORDSON	1122085	KIT, GRATE, ADH STR, 120L, PELLETS,	1
16-MAIN GUARDS	01/22/15	53978	ADCO	100-22-130	HANDLE - ADCO (90° LOGO)	4
16-MAIN GUARDS	01/22/15	53979	ADCO	100-22-132	HANDLE - ADCO (270° LOGO)	4
16-MAIN GUARDS	01/22/15	54054	ADCO	100-39-108	HINGE - LOWER GUARD DOOR	24
16-MAIN GUARDS	01/22/15	54055	ADCO	100-39-109	HINGE - UPPER GUARD DOOR	24
16-MAIN GUARDS	01/22/15	49026	Allen Bradley	#82653	CORDSET - 10M FOR SENSAGUARD SW 8PIN MICRO M12 CONNECTOR	8
16-MAIN GUARDS	01/22/15	50410	Allen Bradley	440N-Z21S16H	SENSAGUARD INTERLOCK SWITCH, 18mm PLASTIC BARREL, WITH 6" PIGTAIL W/ 8PIN MICRO M12 CONNECTOR	8
16-MAIN GUARDS	01/22/15	31925	MCMASTER CARR	9541-K3	BUMPER STOP	4
16-MAIN GUARDS	01/22/15	49155	WAM	# 3700	LATCH, GUARD DOOR, PLASTIC	16
16-MAIN GUARDS	02/24/15	53978	ADCO	100-22-130	HANDLE - ADCO (90° LOGO)	2
16-MAIN GUARDS	02/24/15	53979	ADCO	100-22-132	HANDLE - ADCO (270° LOGO)	2
16-MAIN GUARDS	02/24/15	54054	ADCO	100-39-108	HINGE - LOWER GUARD DOOR	8
16-MAIN GUARDS	02/24/15	54055	ADCO	100-39-109	HINGE - UPPER GUARD DOOR	8
16-MAIN GUARDS	02/24/15	49026	Allen Bradley	#82653	CORDSET - 10M FOR SENSAGUARD SW 8PIN MICRO M12 CONNECTOR	4
16-MAIN GUARDS	02/24/15	50410	Allen Bradley	440N-Z21S16H	SENSAGUARD INTERLOCK SWITCH, 18mm PLASTIC BARREL, WITH 6" PIGTAIL W/ 8PIN MICRO M12 CONNECTOR	4
16-MAIN GUARDS	02/24/15	31925	MCMASTER CARR	9541-K3	BUMPER STOP	4
16-MAIN GUARDS	02/24/15	49155	WAM	# 3700	LATCH, GUARD DOOR, PLASTIC	4
16-MAIN GUARDS	05/20/15	53978	ADCO	100-22-130	HANDLE - ADCO (90° LOGO)	2
16-MAIN GUARDS	05/20/15	53979	ADCO	100-22-132	HANDLE - ADCO (270° LOGO)	2
16-MAIN GUARDS	05/20/15	54054	ADCO	100-39-108	HINGE - LOWER GUARD DOOR	8
16-MAIN GUARDS	05/20/15	54055	ADCO	100-39-109	HINGE - UPPER GUARD DOOR	8
16-MAIN GUARDS	05/20/15	49026	Allen Bradley	#82653	CORDSET - 10M FOR SENSAGUARD SW 8PIN MICRO M12 CONNECTOR	4
16-MAIN GUARDS	05/20/15	50410	Allen Bradley	440N-Z21S16H	SENSAGUARD INTERLOCK SWITCH, 18mm PLASTIC BARREL, WITH 6" PIGTAIL W/ 8PIN MICRO M12 CONNECTOR	4

PURCHASE PARTS

SECTION	DATE	ADCO#	BRAND	CATALOG NO.	DESCRIPTION	QTY
16-MAIN GUARDS	05/20/15	31925	MCMASTER CARR	9541-K3	BUMPER STOP	4
16-MAIN GUARDS	05/20/15	49155	WAM	# 3700	LATCH, GUARD DOOR, PLASTIC	4
17-LUBRICATION	01/20/15	38849	LUBE USA	202269	"AMO-150S" MOTOR DRIVE GEAR PUMP WITHOUT CONTROLLER (110 VAC)	1
17-LUBRICATION	01/20/15	31581	LUBEMATIC	185008	FLOW UNIT INJECTOR (HJB-02)	16
17-LUBRICATION	01/20/15	32329	LUBEMATIC	186001	ADAPTER STRAIGHT	16
17-LUBRICATION	01/20/15	30299	LUBEMATIC	186401	4-WAY JUNCTION	4
17-LUBRICATION	01/20/15	31578	LUBEMATIC	189311	TYPE FX-1 IN-LINE FILTER	1
17-LUBRICATION	01/20/15	49605	McMASTER CARR	5173K74	TUBE - Ø1/4" (0.050 WALL) NYLON BLACK (922 PSI MAX.) X 100FT ROLL	200 FT
17-LUBRICATION	01/20/15	40982	TRICO	36039	LUBE BRUSH, NYLON BRISTLE, 5/8" ROUND	6
17-LUBRICATION	01/20/15	31908		106254	COMPRESSION SLEEVE - 1/8" BRASS	12
17-LUBRICATION	01/20/15	31912		186252	COMPRESSION FITTING - STRAIGHT 1/8" TUBE X 5/16" UNF MALE BRASS	12
18-ELECTRICAL	01/15/15	59385	JEFFERSON ELECTRIC	413-1147-000-CD	ROBOT CONTROLLER STEP DOWN TRANSFORMER (9KVA, 480V to 240V)	1
18-ELECTRICAL	01/26/15	53164	STRONGARM	602-XM1H24-151506	VERTICA PENDANT ARM, 602 NEMA 4X SERIES, VERTICA XL ARM STYLE 30" VERT TRAVEL, MACH TOP MOUNT, STANDARD CONFIG, 24" HORIZONTAL EXTENSION, 15w x 15h x 6d" ENCLOSURE (new standard size) (5390-17-130)	1
18-ELECTRICAL	01/26/15	49518	CABLOFIL	CF30/100	CF30/100, 118" x 4" x 1" (5319-18-100) (5319-18-101) (5319-18-102) (5319-18-107) (5319-18-111) (5319-18-114)	6
18-ELECTRICAL	02/06/15	44898	Jefferson	411-0071-000	240-480 x 120-240 transformer, 1KVA, 1P	1
18-ELECTRICAL	02/06/15	40298	Allen Bradley	100-C09DJ01	9 amp, 24vdc coil, NC aux contacts	2
18-ELECTRICAL	02/06/15	49713	Allen Bradley	140M-C2E-B40	Drive overcurrent protection device 4.0 amp max rated, "C" Frame	4
18-ELECTRICAL	02/06/15	49443	Allen Bradley	140M-C2E-B63	Drive overcurrent protection device 6.3 amp max rated, "C" Frame	1
18-ELECTRICAL	02/06/15	50592	Allen Bradley	140M-C2E-C10	Drive overcurrent protection device 10.0 amp max rated, "C" Frame	2
18-ELECTRICAL	02/06/15	46897	Allen Bradley	1492-CAB010B69	Connection cable for IFM module, Inputs,1.0m	2
18-ELECTRICAL	02/06/15	46899	Allen Bradley	1492-CAB010E69	Connection cable for IFM module, Outputs,1.0m	1
18-ELECTRICAL	02/06/15	37998	Allen Bradley	1492-FB1C30-L	1P fuse holder,with blown fuse indicator	3
18-ELECTRICAL	02/06/15	38006	Allen Bradley	1492-FB2C30-L	2P fuse holder,with blown fuse indicator	1
18-ELECTRICAL	02/06/15	38005	Allen Bradley	1492-FB3C30-L	3P fuse holder,with blown fuse indicator	4
18-ELECTRICAL	02/06/15	46931	Allen Bradley	1492-IFM20F-3	I/O Interface Module, 16 Pt, Sensor Power Bus +/-	2
18-ELECTRICAL	02/06/15	45499	Allen Bradley	1492-IFM20FN	I/O Interface Module, 16 Pt, Narrow	1
18-ELECTRICAL	02/06/15	50593	Allen Bradley	1492-PBC9	Cover, power block	1
18-ELECTRICAL	02/06/15	41254	Allen Bradley	1492-PDM3141	Power Distribution Block, 4x1, 115 amps	1
18-ELECTRICAL	02/06/15	49446	Allen Bradley	1492-SP1C050	1 pole, 5A, 230v, circuit breaker (supplemental protection)	1
18-ELECTRICAL	02/06/15	45265	Allen Bradley	1494F-S1	Disconnect Operating Handle, Side Flange Style, Stainless Steel	1
18-ELECTRICAL	02/06/15	53782	Allen Bradley	1769-L27ERM-QBFC1B	CompactLogix CPU, 1Mb RAM, 16 In, 16Out, Analog, HSC, 4 Axis motion	1
18-ELECTRICAL	02/06/15	40916	Allen Bradley	1769-OB16P	Micrologix 1500 16pt output card, solid state, protected	1

PURCHASE PARTS

SECTION	DATE	ADCO#	BRAND	CATALOG NO.	DESCRIPTION	QTY
18-ELECTRICAL	02/06/15	54296	Allen Bradley	1783-MS10T	Stratix 8000 ethernet switch, 10 port	1
18-ELECTRICAL	42041	56233	Allen Bradley	1783-US8T	Stratix 2000 ethernet switch, 8 port	1
18-ELECTRICAL	02/06/15	45675	Allen Bradley	193-ED1CB	1.0 - 5.0 amp electronic overload relay	2
18-ELECTRICAL	02/06/15	53572	Allen Bradley	194R-FC03	Disconnect Operating Accessory, Cable Operator, 3 Ft.	1
18-ELECTRICAL	02/06/15	53631	Allen Bradley	194R-J60-1753	60 amp, fused IEC disconnect (J fuses)	1
18-ELECTRICAL	02/06/15	47806	Allen Bradley	2090-K2CK-D15M	Low Profile breakout for K3x0 motor feedback	3
18-ELECTRICAL	02/06/15	53780	Allen Bradley	2097-V34PR5-LM	Kinetix 350, 460v 3ph, 2.0Kw, 5.7a output	2
18-ELECTRICAL	02/06/15	54994	Allen Bradley	25B-D2P3N104	1HP, 3Ph Input, 460v 2.3 A Output, "A" frame, PowerFlex 525	4
18-ELECTRICAL	02/06/15	55942	Allen Bradley	25B-D6P0N104	3HP, 3Ph Input, 460v 6.0 A Output, "A" frame, PowerFlex 525	1
18-ELECTRICAL	02/06/15	52244	Allen Bradley	2711P-T10C4D8	PV+6 (Touch only), 10" Color, RS232,Cat5, 512MB	1
18-ELECTRICAL	02/06/15	45092	Allen Bradley	42EF-B1JBBE-F4	Photo eye, background supression, LO	4
18-ELECTRICAL	02/06/15	46125	Allen Bradley	42EF-G1MPA-F4	Photo eye, fiber-optic, LO/DO	1
18-ELECTRICAL	02/06/15	43558	Allen Bradley	42EF-P2MPB-F4	Photo eye, retroreflective, sourcing	4
18-ELECTRICAL	02/06/15	47309	Allen Bradley	43GR-TMC25SL	Fiber Optic cable, Bifurcated, Right angle, Glass	1
18-ELECTRICAL	02/06/15	41057	Allen Bradley	440R-M23084	MSR138 1DP, Emergency Stop Relay 2 Ch, W/td	1
18-ELECTRICAL	02/06/15	54742	Allen Bradley	440R-E23097	Emergency Stop Relay Expansion, 4 N.O. Safety Outputs	1
18-ELECTRICAL	02/06/15	52626	Allen Bradley	599-GR1	Ground Lug, Incoming power	1
18-ELECTRICAL	02/06/15	34819	Allen Bradley	700-HK32Z24-4	5a,DPDT, 24vdc, slim line	3
18-ELECTRICAL	02/06/15	34772	Allen Bradley	700-HN122	Relay Base, DIN rail mount, gen purpose	3
18-ELECTRICAL	02/06/15	39852	Allen Bradley	800F-AF5CE138	Jog Legend, 22.5mm	1
18-ELECTRICAL	02/06/15	39030	Allen Bradley	800F-MX10	Contact Block (1 N.O.), with metal mounting latch, 22.5mm	1
18-ELECTRICAL	02/06/15	39850	Allen Bradley	800F-P15	AB Jog Handle (Single hole), 22.5mm	1
18-ELECTRICAL	02/06/15	48747	Allen Bradley	800FP-F6	Blue pushbutton, flush, 22.5mm	1
18-ELECTRICAL	02/06/15	39851	Allen Bradley	800FP-G9	Jog Pushbutton guard head without cap, 22.5mm	1
18-ELECTRICAL	02/06/15	56126	Allen Bradley	800FP-LMT44PN3RX11S	Red, Illuminated, Twist to Release, 40mm mushroom E-stop, Integrated Red LED, 24V AC/DC, 1 N.O, 1 N.C. Contact(s), 22.5mm	2
18-ELECTRICAL	02/06/15	36230	Allen Bradley	800H-AR1	Green, flush head pushbutton, 30.5mm	2
18-ELECTRICAL	02/06/15	52016	Altech	KKVM 332CC Y/R	Enclosed, fused disconnect, 30 A, 4x, Fiberglass (Type CC fuses)	1
18-ELECTRICAL	02/06/15	56390	Banner	SA-E12M30	Mounting base, for Banner light stack	1
18-ELECTRICAL	02/06/15	56391	Banner	SA-M30TE12	Mounting adaptor for Banner light stack	1
18-ELECTRICAL	02/06/15	56389	Banner	SOP-E12-150SS	Light stack riser, polished SS, 150mm	1
18-ELECTRICAL	02/06/15	54996	Banner	SSA-EB1PLGR-12ECQ8	E-Stop Pushbutton, Complete	4
18-ELECTRICAL	02/06/15	56387	Banner	TL50HBGYRQ	4 Color LED light stack, 24vdc, integrated	1
18-ELECTRICAL	02/06/15	40083	Brad Harrison	103002A01F200	Jog cord cable, 20', "Mini"	1
18-ELECTRICAL	02/06/15	38467	Brad Harrison	1R3004A20A120	Female "Mini" Receptacle	1
18-ELECTRICAL	02/06/15	36588	Brad Harrison	65-0086	cap	1
18-ELECTRICAL	02/06/15	52444	efector	E30094	Protective cover for PK6224/PK6220	1
18-ELECTRICAL	02/06/15	48011	efector	PK6224	Pressure switch, 0 to 150 psi, Micro connector	1
18-ELECTRICAL	02/06/15	56694	Grainger	29NV67	LIGHT FIXTURE - 2FT FLUORESCENT DAMP ENVIRONMENT	2

PURCHASE PARTS

SECTION	DATE	ADCO#	BRAND	CATALOG NO.	DESCRIPTION	QTY
18-ELECTRICAL	02/06/15	48819	Grainger	F15T8	Fluorescent bulb	4
18-ELECTRICAL	02/06/15	47062	Grainger	GELF20T12/CW/CVG	F20T12 Shatter proof type lamp for 1NC58	4
18-ELECTRICAL	02/06/15	52297	Hoffman	AGS 816	Grounding Strap, for enclosure doors	2
18-ELECTRICAL	02/06/15	54870	Icotek	SK 10-20	Grounding Spring Clamp	8
18-ELECTRICAL	02/06/15	47563	Mac	56C-33-501JD=4358	Large 3 way 1/2" port	1
18-ELECTRICAL	02/06/15	56082	Murr	7000-12481-0000000	M12 field wireable connector, male, 4 pin	15
18-ELECTRICAL	02/06/15	53044	Murr	8000-84410-3331000	PNP 4-Port wiring block w/10m cable	4
18-ELECTRICAL	02/06/15	56393	Murr (Iris)	7000-12241-0351000	M12, 5 pin, Cable, 10m, straight field connector, Female	1
18-ELECTRICAL	02/06/15	45096	Murr (Iris)	7000122210240500	M12, 4 pin,Cable, 5m straight, yellow	10
18-ELECTRICAL	02/06/15	45097	Murr (Iris)	7.00012E+15	M12, 4 pin, Cable, 10m, straight, yellow	10
18-ELECTRICAL	02/06/15	47483	Nordson	772 033	Pressure transducer, DIN rail mount	1
18-ELECTRICAL	02/06/15		Precision Plastics	B34-3983A	Operator Station Legend Plate, 4 hole Horizontal	1
18-ELECTRICAL	02/06/15	54723	ReignPower	LP1150-24MADA	24VDC Power Supply, 6.25a, 150w	1
18-ELECTRICAL	02/06/15	48997	SMC	AC30-IEM02	FR ASSEMBLY, 3/8", (Standard)	1
18-ELECTRICAL	02/06/15	49105	SMC	SV2100-5W1U-02N	Pneumatic control valve, 5/2, Single Solenoid, 24vdc, Subplate	1
18-ELECTRICAL	02/06/15	55403	Turck	8.0010.40H0.0000	Turck Encoder single point tether arm (T8.5x encoders)	1
18-ELECTRICAL	02/06/15	55601	Turck	E-RKC 8T-264-30	Cable, 30m, straight, black jacket, M12, 8 conductor, 4 STP,	1
18-ELECTRICAL	02/06/15	56621	Turck	T8.5826.1U62.1200	Encoder, SS, 0.50 Inch Hollow bore, 1200ppr, 24vdc, 5-30vdc Push/pull output	1
18-ELECTRICAL	02/06/15	55538	Turck	WKC8T-10/S771	M12, 8 pin, Cable, 10m, 90deg, gray jacket	4
18-ELECTRICAL	02/06/15	55770	Mencom	GF-RJ45-R-32	External access to programming ports, Ethernet + 115v receptacle	1
18-ELECTRICAL	02/18/15	57077	NOREN	CC600 PACF	ALUMINUM FILTER ASSY, CC600	2
18-ELECTRICAL	02/06/15	49834	Noren	CC600F	Compact cabinet cooler, 115v	1
18-ELECTRICAL	02/06/15	54959	SAGINAW	SCE-60P36galv	Panel, main enclosure	1
18-ELECTRICAL	02/06/15	57438	SAGINAW	SCE-60XEL3712SSLP	Enclosure, 60x37x12 Flang Disconnect (5624-18-105)	1
18-ELECTRICAL	02/06/15	53964	SAGINAW	SCE-L9186ELJWSS	Enclosure, 18X9X6 Junction box	1
18-ELECTRICAL	02/06/15	53968	SAGINAW	SCE-9P18L	Panel for SCE-L9186ELJSS	1
18-ELECTRICAL	02/06/15		Precision Plastics		Device labels, one each	ref
18-ELECTRICAL	02/06/15	38601	Allen Bradley	800H-AR7	Blue, flush head pushbutton, 30.5mm	2
18-ELECTRICAL	02/06/15	36229	Allen Bradley	800H-BR6	Red, extended head pushbutton, 30.5mm	2
18-ELECTRICAL	02/06/15	38482	Allen Bradley	800T-H3115	2 position switch, (guard bypass), 30.5mm	1
18-ELECTRICAL	02/06/15	30951	Allen Bradley	800T-XA	Contact Block 1 N.O. & 1 N.C.	4
18-ELECTRICAL	02/06/15	30954	Allen Bradley	800T-XD1	Contact Block 1 N.O.	4
18-ELECTRICAL	02/06/15	45731	Edison	EDCC-2	2 amp, Midget fuse, Class CC, SloBlow	2
18-ELECTRICAL	02/06/15	45734	Edison	EDCC-5	5 amp, Midget fuse, Class CC, SloBlow	1
18-ELECTRICAL	02/06/15	45733	Edison	EDCC-4	4 amp, Midget fuse, Class CC, SloBlow	8
18-ELECTRICAL	02/06/15	45739	Edison	EDCC-12	12 amp, Midget fuse, Class CC, SloBlow	3
18-ELECTRICAL	02/06/15	45740	Edison	EDCC-15	15 amp, Midget fuse, Class CC, SloBlow	3
18-ELECTRICAL	02/06/15	45741	Edison	EDCC-20	20 amp, Midget fuse, Class CC, SloBlow	3
18-ELECTRICAL	02/06/15	45339	Littlefuse	JTD-50	50 amp, J Type fuse	3
18-ELECTRICAL	02/06/15	30955	Allen Bradley	800T-XD2	Contact Block 1 N.C.	2
18-ELECTRICAL	02/06/15	57112	Marathon	BCI-PUR-HR-XXFFMF-S-066	FEEDBACK CABLE, 20m	2
18-ELECTRICAL	02/06/15	57437	Marathon	BCI-PUR-XXFPMF-16S-066	MTR. POWER CABLE, 20m	2

PURCHASE PARTS

SECTION	DATE	ADCO#	BRAND	CATALOG NO.	DESCRIPTION	QTY
18-ELECTRICAL	02/06/15	53045	Murr	8000-88410-3621000	PNP 8-Port wiring block w/10m cable	2
18-ELECTRICAL	02/06/15	43423	Allen Bradley	800T-XD6	Contact Block 1 N.C. Mini	2
18-ELECTRICAL	02/06/15	55666	Allen Bradley	842E-CM-MIP10BA	842E-CM Ethernet/IP Encoder - CIP Motion, Multi-turn (4096 turns), Hollow shaft 1/2 in, M12 connector, 262,144 (18 bit) steps per revolution	1
18-ELECTRICAL	02/06/15	43273	Allen Bradley	855P-B30ME22	Panel mount sounder (Horn)	1
18-ELECTRICAL	02/06/15	45094	Allen Bradley	872C-DH3CP12D4	N.C. Inductive prox switch	1
18-ELECTRICAL	02/06/15	45093	Allen Bradley	872C-DH3NP12D4	N.0. Inductive prox switch	3
18-ELECTRICAL	02/18/15	38740	Allen Bradley	1769-ECR	Micro/CompactLogix End cap	1
18-ELECTRICAL	02/23/15		Allen Bradley	25B-D1P4N104	1/2HP, 3Ph Input, 460v 1.2 A Output, "A" frame, PowerFlex 525	1
18-ELECTRICAL	02/23/15		Allen Bradley	140M-C2E-B25	Drive overcurrent protection device 2.5 amp max rated, "C" Frame	1
18-ELECTRICAL	02/26/15	42168	ICOTEK	KEL 16/8	cable entery ICOTEK	2
18-ELECTRICAL	02/26/15	41498	ICOTEK	KEL 24/10	cable entery ICOTEK	2
18-ELECTRICAL	03/04/15	52016	Altech	KKVM 332CC Y/R	Enclosed, fused disconnect, 30 A, 4x, Fiberglass (Type CC fuses)	1
18-ELECTRICAL	03/04/15	53969	SAGINAW	SCE-4PBXSS	ENCLOSURE, SS-PBX, 4 HOLE	1
18-ELECTRICAL	03/10/15	48061	Nordson	1053289	KIT,CIRCUIT BOARD,ETHERNET CARD Quotation Number 20826200	1
18-ELECTRICAL	03/24/15	54611		B34-2100D	4 button legend plate	1
18-ELECTRICAL	04/08/15	57635	Grace Port	R-3W	Flashing Voltage Incicator	1
18-ELECTRICAL	04/08/15	57660	Grace Port	R-3W-L	Label for Flashing Voltage Indicator	1
18-ELECTRICAL	04/29/15		Allen Bradley	1783-BMS10CGN	Stratix 5700 ethernet switch,10 port w/CIP sync, and NAT	1
18-ELECTRICAL	05/05/15	46931	Allen Bradley	1492-IFM20F-3	I/O Interface Module, 16 Pt, Sensor Power Bus +/-	1
18-ELECTRICAL	05/20/15	57754	Precision Plastics	B34-3459D	Device labels, one each	
18-ELECTRICAL	06/18/15	49653	Allen Bradley	43GT-TMS25SL	Fiber Optic cable, Transmitted, Right angle, Glass	2
18-ELECTRICAL	07/02/15	49082	Allen Bradley	800H-QRB24B	Illuminated, blue pushbutton	1
19-INDEXING SYSTEM	12/04/14	50328	Allen Bradley	MPL-B320P-MJ72AA	SERVO, 320-SERIES, 460v, 5000rpm, MULTI-TURN ENCODER	2
19-INDEXING SYSTEM	12/04/14	51999	KIPP	06454-310	10mm, ADJUSTABLE HANDLE, STAINLESS STEEL, FEMALE	2
19-INDEXING SYSTEM	12/04/14	51783	MISUMI	HTBN 490 S5M 250	GEARBELT - HIGH TORQUE S5M TYPE 98 TOOTH - 490mm LG X 25mm WIDE	2
19-INDEXING SYSTEM	12/04/14	51781	MISUMI	HTPK28S5M250-A-N20-KC90-FC46	PULLEY - S5M PITCH - 28 TOOTH HIGH TORQUE - 20mm BORE KW & SS W/ 46mm CUT FLANGE (5228-19-112)	2
19-INDEXING SYSTEM	12/04/14	51782	MISUMI	HTPK28S5M250-A-N22-KC90	PULLEY - S5M PITCH - 28 TOOTH HIGH TORQUE - 22mm BORE KW & SS	2
19-INDEXING SYSTEM	12/04/14	57321	MORRISON		FEED SCREW ORDER (5624-19-900)	1
19-INDEXING SYSTEM	12/04/14	57322	MORRISON		FEED SCREW ORDER (5624-19-901)	1
19-INDEXING SYSTEM	12/04/14	57323	MORRISON		FEED SCREW ORDER (5624-19-902)	1
19-INDEXING SYSTEM	12/04/14	52797	SKF	W 6004-2RS1	DBL. SEALED RADIAL BRG.- 20mm BORE STAINLESS STEEL	8
19-INDEXING SYSTEM	12/04/14	52796	SPIROLOX	RR-78-S	RETAINING RING - INTERNAL SS	2

PURCHASE PARTS

SECTION	DATE	ADCO#	BRAND	CATALOG NO.	DESCRIPTION	QTY
19-INDEXING SYSTEM	12/04/14	44897	SPIROLOX	RR-165-S	RETAINING RING - INTERNAL SS	8
19-INDEXING SYSTEM	01/19/15	57369	STOBER	P421SPZ0010MT - AB MPL-B320	PLANETARY GEARHEAD, SERVOFIT "P" SERIES, 10:1 RATIO, REINFORCED BRGS-RADIAL, 22mm KEYED OUTPUT SHAFT, TO FIT ALLEN BRADLEY MPL-B320 SERVO MOTOR	2
19-INDEXING SYSTEM	02/24/15	53608	ADCO		ROLLER, SIZE 52, WASHDOWN (100-38-011)	32
19-INDEXING SYSTEM	02/24/15	45828	IPTCI	SSER-204	INSERT BEARING - 20MM ID X 47MM OD X 15.9MM WIDE SS	8
19-INDEXING SYSTEM	02/24/15	52210	SIKO	DA09S-02-20-O-I-VA20-O-A-K-OAD-OZP	DIGITAL INDICATOR, S.S. BORE, 02 MOUNT POSITION, CLOCKWISE INCREASING, (in/out)	2
19-INDEXING SYSTEM	02/24/15	45160	SIKO	DA09S-04-20-O-E-VA20-O-A-K-OAD-OZP	DIGITAL INDICATOR, S.S. BORE, 04 MOUNT POSITION, CLOCKWISE DECREASING, (elev.)	2
19-INDEXING SYSTEM	02/24/15	42652	KASTAR	ROWM 1214	RATCHET WRENCH 12mm x 14mm	2
19-INDEXING SYSTEM	03/17/15		BOSTON	FB810-4	BUSHING	4
19-INDEXING SYSTEM	03/17/15	50909	McMASTER CARR	#6813A62	Stainless Steel Pocket Rule,150 mm Length (5172-04-123)	2
20-INFEED CONVEYOR	01/16/15	30332	CASTER INC.	# 43209339	B/B SWIVEL CASTER (4 1/4" HIGH x 3" DIA.)	4
20-INFEED CONVEYOR	01/16/15	42934	NGI	HJ90-1"-10"	FOOT, ARTICULATED S.S. (Ø 1" UNC X 10" LG)	4
20-INFEED CONVEYOR	01/16/15	57380	NORDGEAR	SK1SMID50VZH-71L4	1/2 HP GEARMOTOR - 86RPM (20:1 RATIO) - 25mm SOLID S.S. SHAFT @ SIDE B - "M3" MOUNTING - NSD-+ PAINT - SHAFT COVER @ A - 230/460V-60Hz - T.B. @ 1 - C.E. @ 1	1
20-INFEED CONVEYOR	01/16/15	47267	SOLUS	VTK-980-T-S-0325-10	NARROW "VALUE TRAC" 880 TAB CHAIN TRACK - A4 BLACK , 10ft. LONG (5624-20-105) (5624-20-106)	2
20-INFEED CONVEYOR	01/16/15	57384	UNI	#K350-TYPE 2	TYPE "2" UNI-RIB COMB 5.31" LONG, HOLES @ 1.34" (5624-20-104)	1
20-INFEED CONVEYOR	01/16/15	42863	UNI	3433880010N	UNI-RIB POLYMIDE SPROCKET - 10 PITCH W/ 4 55/64 PITCH DIA. (5624-20-101)	2
20-INFEED CONVEYOR	01/16/15	31999	UNI	34LF880URTK350	UNI 880 RIB CHAIN 3 1/2" WIDE 10ft PER BOX 20ft NEEDED	20FT
20-INFEED CONVEYOR	02/24/15	49697	IPTCI	SUCSFL205	BEARING - Ø25mm 2 HOLE FLANGE ALL STAINLESS	4
20-INFEED CONVEYOR	03/16/15	50909	McMASTER CARR	#6813A62	Stainless Steel Pocket Rule,150 mm Length (5172-04-123)	7
21-ROBOT	02/02/15	57412	FANUC	A05B-2550-J210	CPL LINE TRACKING CABLE (7M)	1
21-ROBOT	02/02/15	56710	FANUC	A860-0301-T001	PULSE CODER	1
21-ROBOT	02/06/15	46125	Allen Bradley	42EF-G1MPA-F4	Photo eye, fiber-optic, LO/DO	2
21-ROBOT	02/06/15	46126	Allen Bradley	43GR-TBB25SL	Fiber Optic cable, Bifurcated, Stright, Glass	2
21-ROBOT	02/17/15	57024	SDP	A1N2-Y16016	SPUR GEAR, 16DP, 16 T, 20 DEG PA, NYLON (5598-03-157)	1
21-ROBOT	02/17/15	57025	SDP	A1N2-Y16016	SPUR GEAR, 16DP, 80 T, 20 DEG PA, NYLON (5598-03-164)	1
21-ROBOT	02/20/15	57024	SDP	A1N2-Y16016	SPUR GEAR, 16DP, 16 T, 20 DEG PA, NYLON (5598-03-157)	1
21-ROBOT	02/20/15	57025	SDP	A1N2-Y16016	SPUR GEAR, 16DP, 80 T, 20 DEG PA, NYLON (5598-03-164)	1

PURCHASE PARTS

SECTION	DATE	ADCO#	BRAND	CATALOG NO.	DESCRIPTION	QTY
21-ROBOT			FANUC	M-3iA/6A 6-Axis Food R-30	FANUC M-3iA/6A 6-Axes Food Grade Robot with 3 Phase 220V R-30iA Mate (Open-Air) Controller and LR HandlingTool Software (Compliant with new RIA R15.06 Safety Requirements) M-3iA/6A 6 Axis Food Grade Mechanical Unit (6Kg Maximum Payload, Invert Mounted, 1350mm diameter x 300mm vertical / 900mm X 500mm motion range)	1
22-ROBOT FRAME	02/17/15		CABLOFIL	CF30/60	CF30/60, 203" x 2" x 1'" (5624-22-116), (5624-22-117), (5624-22-118)	1
23-EOAT	01/28/15	57592	MC MASTER	93715A660	THREADED INSERT - M16 ID/M22 OD	4
23-EOAT	01/28/15	57593	MC MASTER	5526K71	PNEUMATIC TUBING	4
23-EOAT	02/18/15	57496	PIAB	G.S50T50.B1.SI.G14M.00.FDA	50 MM SUCTION CUP	2
23-EOAT	03/26/15	50077	IGUS	WFM-1012-06	BUSHING	12
23-EOAT	03/26/15	57640	McMaster	9287K143	TORSION SPRING	10
23-EOAT	04/01/15	38847	CONCEPT		3/8 NPT COUPLER	2
23-EOAT	04/16/15	38847	CONCEPT		3/8 NPT COUPLER	2
23-EOAT		38851	COILHOUSE	N38-12B	3/8 ID x 12' W/2 SWIVEL FTG 8x20	1
23-EOAT	06/10/15	57817	PIAB	01.22.132 PIGRIP STD	FLEXIBLE LIP FOR G.S50T50.B1.SI.G14M.00.FDA	10
23-EOAT	06/12/15		NUMATICS	NSBPC010ANOXXG2	VACUUM GENERATOR	1
24-ROBOT GUARD	01/22/15	49155	WAM	3700-C1	PLASTIC DOOR CATCH	8
24-ROBOT GUARD	01/22/15	54054	FINO	100-39-108	HINGE, LOWER GUARD DOOR	12
24-ROBOT GUARD	01/22/15	54055	FINO	100-39-109	HINGE, UPPER GUARD DOOR	12
24-ROBOT GUARD	03/11/15	49026	Allen Bradley	#82653	CORDSET - 10M FOR SENSAGUARD SW 8PIN MICRO M12 CONNECTOR	4
24-ROBOT GUARD	03/11/15	50410	Allen Bradley	440N-Z21S16H	SENSAGUARD INTERLOCK SWITCH, 18mm PLASTIC BARREL, WITH 6" PIGTAIL W/ 8PIN MICRO M12 CONNECTOR	4
24-ROBOT GUARD	4/22/2015	31925	MCMASTER CARR	9541-K3	BUMPER STOP	4

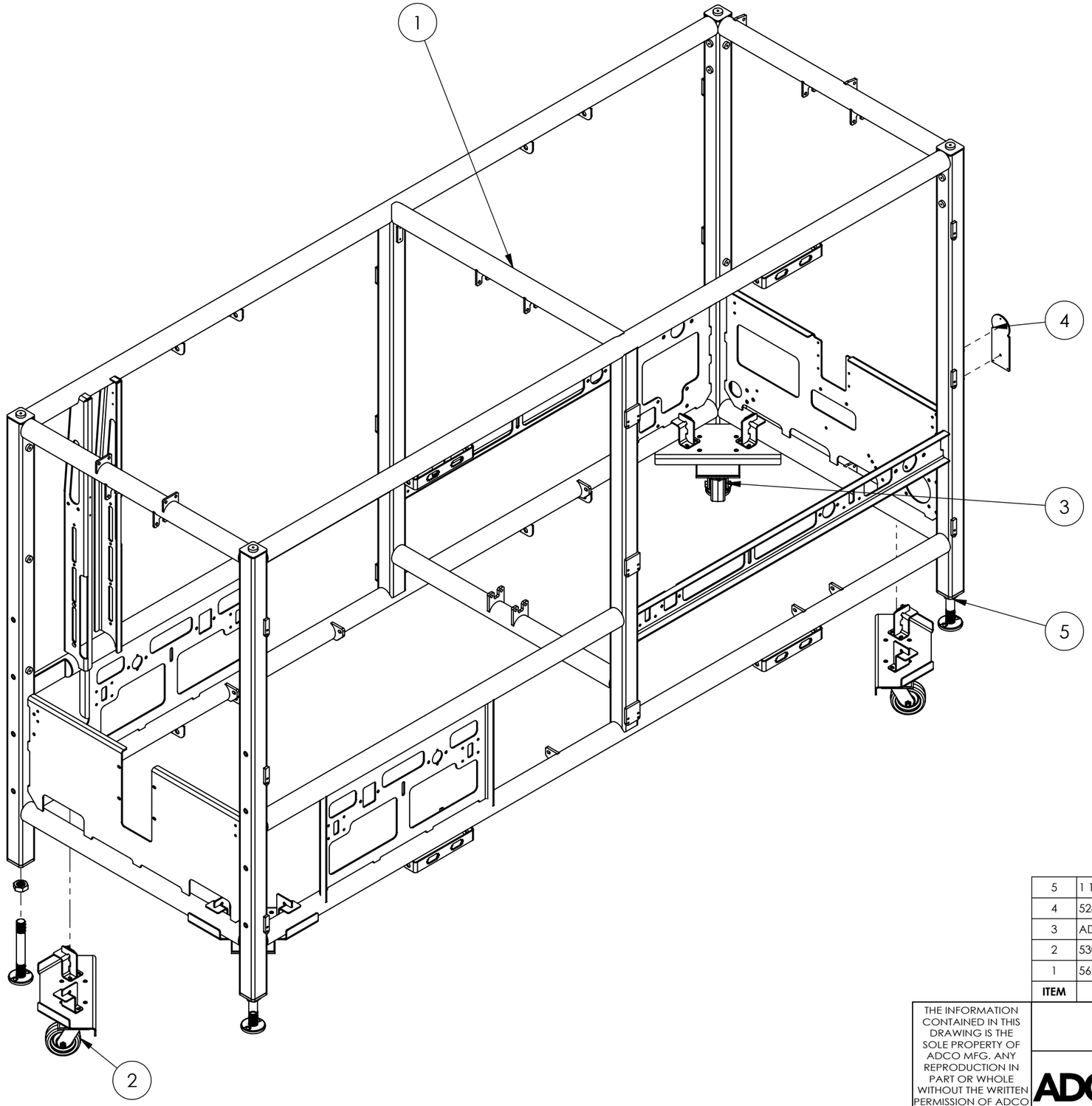

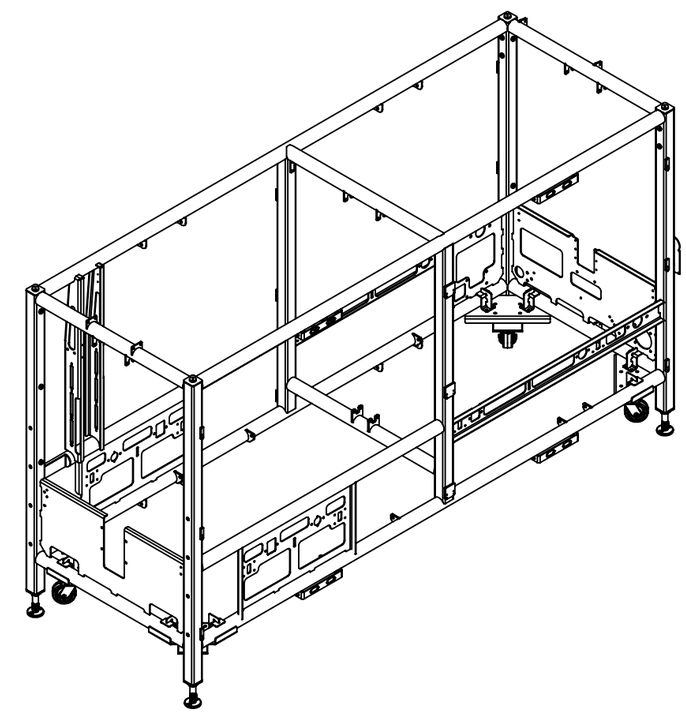

ITEM	PART NUMBER	DESCRIPTION	QTY
5	1 1/4" S.S. JAM NUT	1 1/4" S.S. JAM NUT	4
4	5283-01-124	MOUNT - LEGEND PLATE	1
3	ADCO# 48083	FOOT, S.S. ARTICULATED (HJ110-1 1/4"-10")	4
2	5304-01-003	ASSEMBLY - CASTOR MOUNT	4
1	5624-01-100	WELDMENT - MAIN FRAME	1

THE INFORMATION CONTAINED IN THIS DRAWING IS THE SOLE PROPERTY OF ADCO MFG. ANY REPRODUCTION IN PART OR WHOLE WITHOUT THE WRITTEN PERMISSION OF ADCO MFG IS PROHIBITED.

ASSEMBLY - FRAME

ADCO
2170 ACADEMY AVE
SANGER, CA 93657
INFO@ADCOMFG.COM
559.875.5563

DRAWN BY: JJR | DATE: 02-16-15 | SCALE: 1:16

REFERENCE: 5402-01-001 | DRAWING NUMBER: **5624-01-001** | SHEET 1/1 | SIZE B

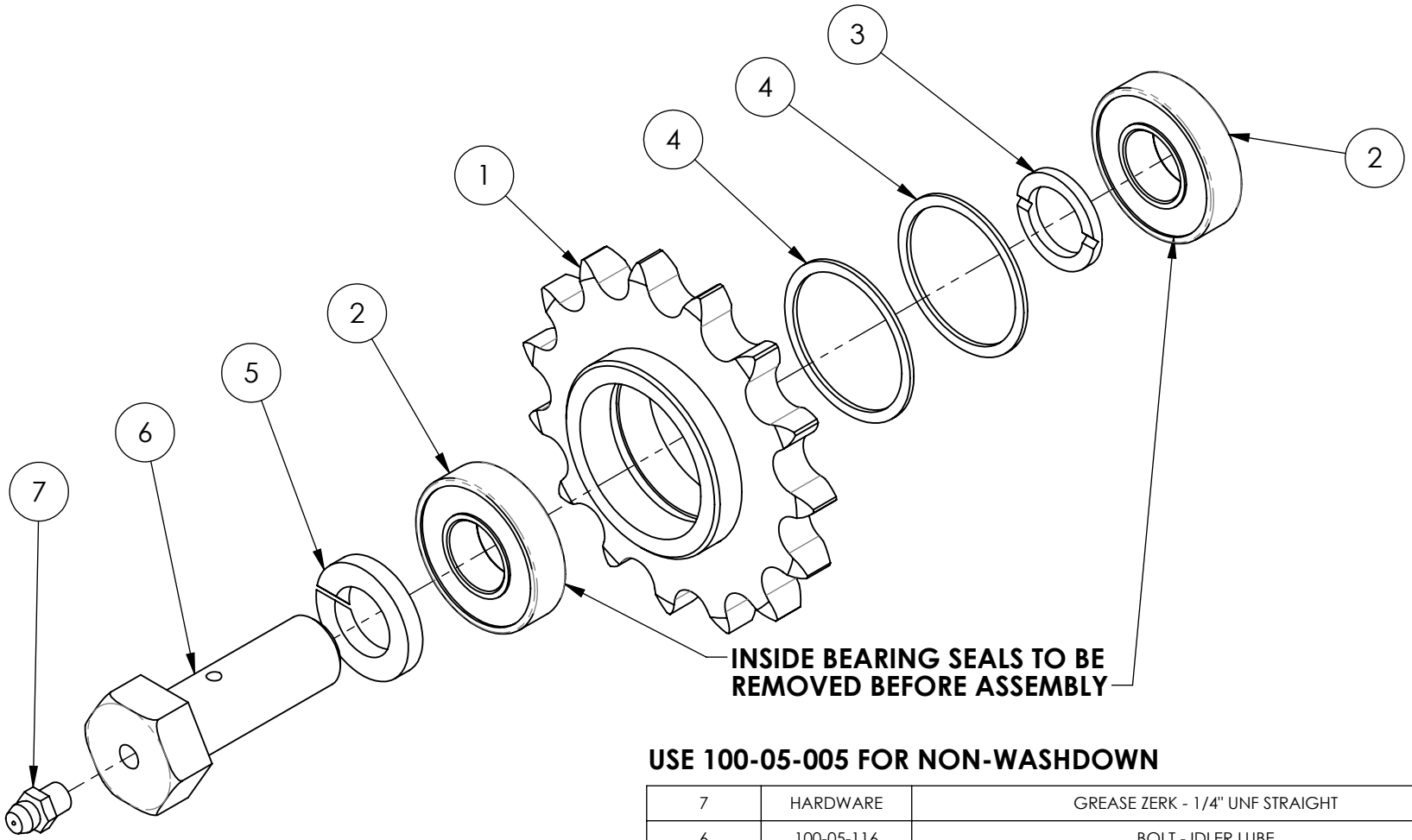

USE 100-05-005 FOR NON-WASHDOWN

ITEM NO.	PartNo	DESCRIPTION	QTY.
7	HARDWARE	GREASE ZERK - 1/4" UNF STRAIGHT	1
6	100-05-116	BOLT - IDLER LUBE	1
5	HARDWARE	WASHER - 5/8" SS LOCK	1
4	ADCO #39646	RETAINING RING - SPIROLOX #RR-137-S	2
3	100-05-115	SPACER - IDLER LUBE	1
2	ADCO #39090	BEARING - Ø5/8 RADIAL (R-10ZZST)	2
1	100-05-102	WELDMENT - #50-15T IDLER (WASHDOWN)	1

MATERIAL: SEE NOTES

TOLERANCES: 1/16" ± 1/64" .00 ± .01 .000 ± .005 .0000 ± .0005 1° ± 10'

OPPOSITE -3

SHOWN -2

MAKE AS: **QTY**

DESCRIPTION: ASSEMBLY - #50-15T IDLER (WASHDOWN)

JOB LABEL

MFG NOTE: BREAK ALL SHARP CORNERS & EDGES

THE INFORMATION CONTAINED IN THIS DRAWING IS THE SOLE PROPERTY OF ADCO MANUFACTURING. ANY REPRODUCTION IN PART OR WHOLE WITHOUT THE WRITTEN PERMISSION OF ADCO MANUFACTURING IS PROHIBITED.

2/08

ADCO Manufacturing
2170 Academy Avenue
Sanger, CA 93657
Tel: 559.875.5563
Fax: 559.875.7665

DRAWN BY: JJV

DATE: 1/9/09

SCALE: 3:4

REFERENCE:

DRAWING NUMBER: **100-05-002**

SHEET 1/1

SIZE A

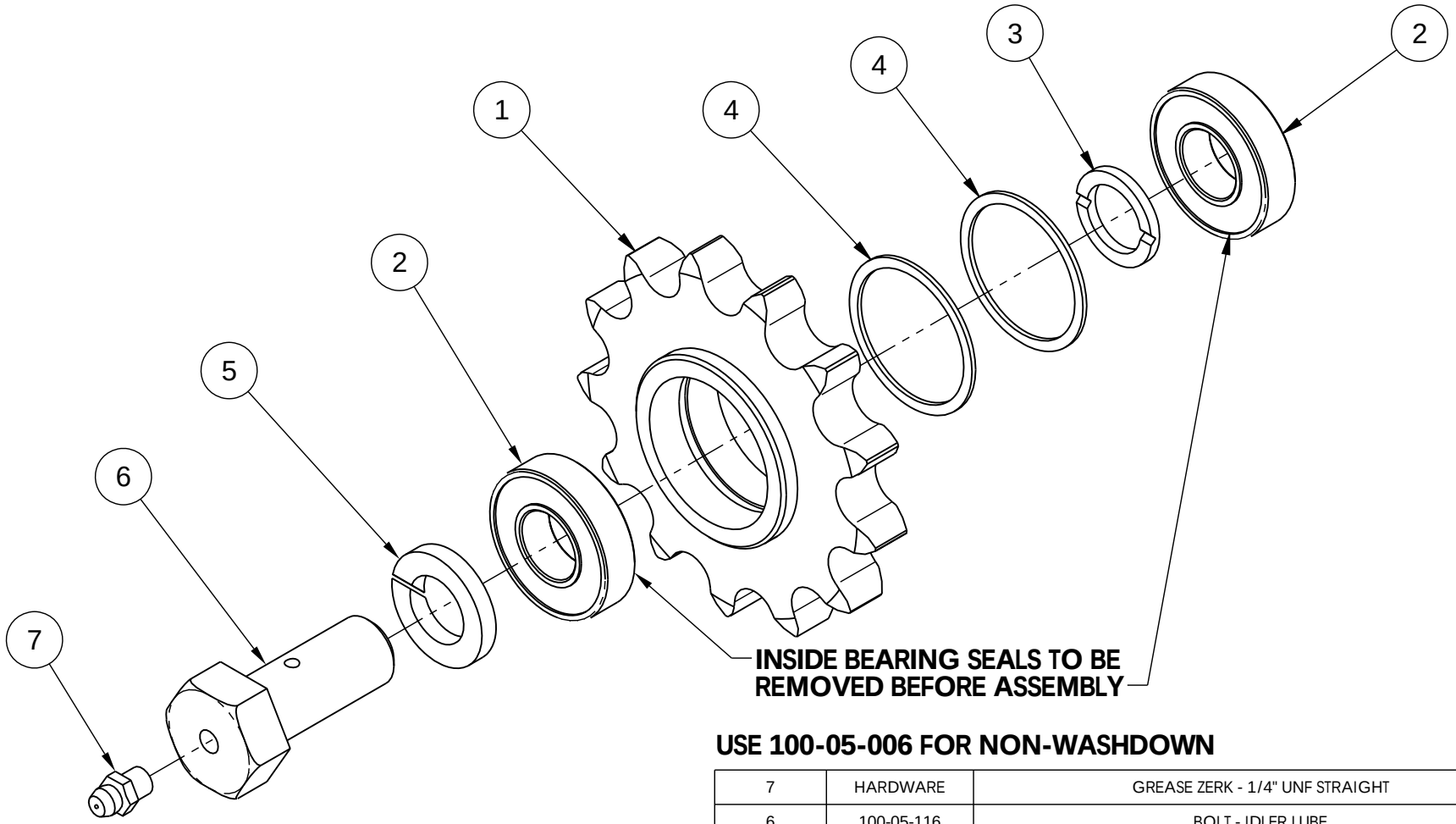

USE 100-05-006 FOR NON-WASHDOWN

ITEM NO.	PartNo	DESCRIPTION	QTY.
7	HARDWARE	GREASE ZERK - 1/4" UNF STRAIGHT	1
6	100-05-116	BOLT - IDLER LUBE	1
5	HARDWARE	WASHER - 5/8" SS LOCK	1
4	ADCO #39646	RETAINING RING - SPIROLOX #RR-137-S	2
3	100-05-115	SPACER - IDLER LUBE	1
2	ADCO #39090	BEARING - Ø5/8 RADIAL (R-10ZZST)	2
1	100-05-103	WELDMENT - #60 IDLER (WASHDOWN)	1

MATERIAL: SEE NOTES

TOLERANCES: 1/16" ± 1/64" .00 ± .01 .000 ± .005 .0000 ± .0005 1° ± 10'

OPPOSITE -3

SHOWN -2

MAKE AS: **QTY**

DESCRIPTION: ASSEMBLY - #60 IDLER (WASHDOWN)

JOB LABEL

MFG NOTE: BREAK ALL SHARP CORNERS & EDGES

THE INFORMATION CONTAINED IN THIS DRAWING IS THE SOLE PROPERTY OF ADCO MANUFACTURING. ANY REPRODUCTION IN PART OR WHOLE WITHOUT THE WRITTEN PERMISSION OF ADCO MANUFACTURING IS PROHIBITED. 2/08

ADCO Manufacturing
2170 Academy Avenue
Sanger, CA 93657
Tel: 559.875.5563
Fax: 559.875.7665

DRAWN BY: JJV

DATE: 1/9/09

SCALE: 3:4

REFERENCE:

DRAWING NUMBER: **100-05-003**

SHEET 1/1

SIZE A

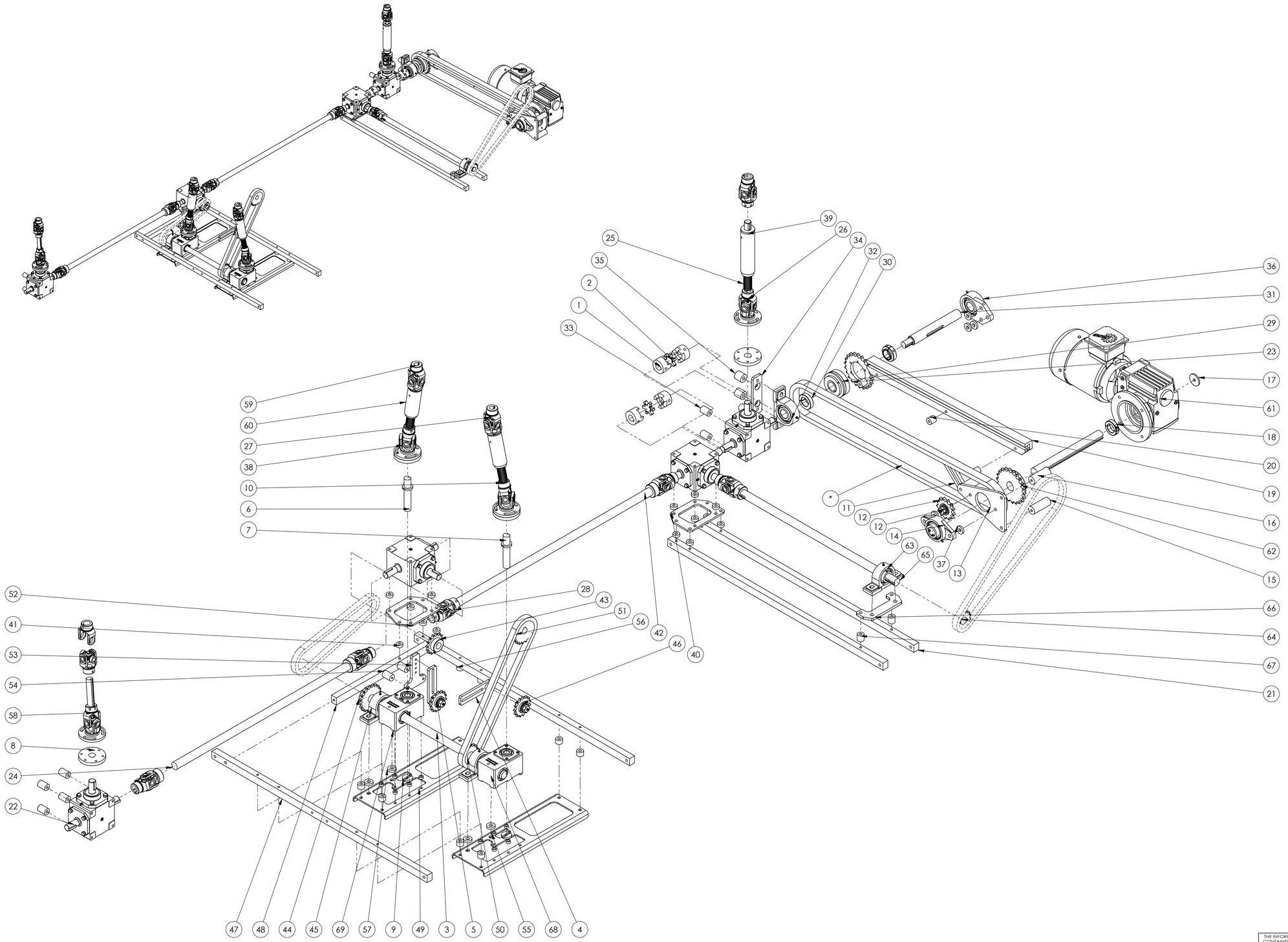

ITEM	PART NUMBER	DESCRIPTION	QTY
69	#4304-0909	WC BRANHAM, STD G8 GLIDE RITE 1:1 RATIO (25MM TO 30MM BORE) LH DRIVE	1
68	4304-0908	WC BRANHAM, STD G8 GLIDE RITE 1:1 RATIO (25MM TO 30MM BORE) RH DRIVE	1
67	A09-S-1.000-0.422-1.000	SPACER	2
66	S624-02-100	PLATE - BEARING MOUNT	1
65	SHAFT	M21-30-32.125-2.000-2.000	1
64	SPROCEKT	M01-S-501-14-30	1
63	SUCTP 206	30mm PILLOW BLOCK BRG	1
62	SPROCKET	M01-S-601-22-35	1
61	SK12063 AF SM5 - 100L/4 NSD+	fromparent+RIGHT ANGLE HELICAL WORM GEARMOTOR, 3hp MOTOR, 15.57:1 RATIO = 110 OUTPUT RPM, AF (B5 flange) MOUNT, M3 MOUNT POS. W/ TERM. BOX @ 4, NSD+ PAINT, S.S. 35mm HOLLOW BORE	1
60	830-02-112	DRIVE COUPLER - OVHD CONV.	2
59	100-07-128	U-JOINT - DRIVE SPICER 20mm	2
58	SHAFT	M20-25-5.250	1
57	A09-S-1.250-0.563-0.313	SPACER	4
56	A09-S-1.000-0.422-0.688	SPACER	8
55	A09-S-0.625-0.344-0.300	SPACER	12
54	SPACER	M10-S-1.000-M8-1.500-M8	2
53	830-02-110	PLATE - IDLER MOUNT	1
52	830-02-109	PLATE - GEARBOX MOUNT	1
51	M01-S-501-20-25	M01-S-501-20-25	1
50	M01-S-501-16-30	M01-S-501-16-30	1
49	830-02-107	CHANNEL - GEARBOX MOUNT	2
48	830-02-106	BAR - MID CROSSMEMBER	1
47	830-02-119	BAR - GEARBOX CROSS	1
46	830-02-105	BAR - GEARBOX CROSS	1
45	SUCTP 206	30mm PILLOW BLOCK BRG	2
44	SPROCKET	M01-S-501-20-30	1
43	SPROCKET	M01-S-501-15-25	1
42	SHAFT M21-30-41.375-2.000-2.000	DOWNSTREAM LINE SHAFT	1
41	A09-S-1.000-0.422-0.375	SPACER	15
40	830-02-103	PLATE - GEARBOX MOUNT	1
39	S178-02-116	WELDMENT - OVERHEAD CONVEYOR DRIVE SPLINE	1
38	S319-06-102	WELDMENT - UNIVERSAL TIMING HUB	4
37	A09-S-1.250-0.516-0.250	SPACER	5
36	SUCTFB 207	35mm 3-HOLE FLANGE BRG	1
35	A09-S-1.250-0.500-1.250	SPACER	2
34	830-02-101	PLATE - BEARING MOUNT	1
33	A09-S-1.000-0.422-1.438	SPACER	8
32	SUCTP 207	"IPTCI" 35mm PILLOW BLOCK BEARING	1
31	830-02-120	SHAFT - TORQ GUARD	1
30	SSCSLS35-43	"MISUMI" SET COLLAR	2
29	S09/200/W/35/100/40-160/35	"R+W" TORQUE LIMITER	1
28	S319-02-111	U-JOINT - DRIVE 30mm	5
27	ADCO#	SPICER, CROSS BEARING KIT - #5-170X	13
26	100-07-100	U-JOINT - DRIVE 25mm	13
25	S178-02-115	SHAFT - OVERHEAD CONVEYOR DRIVE SPLINE	1
24	SHAFT M21-30-36.000-2.000-2.000	UPSTREAM LINE SHAFT	1
23	830-02-102	SPROCKET - DRIVEN @ MAIN DRIVE	1
22	#4303-0031	WC BRANHAM 1:1 SPIRAL BEVEL GEARBOX	4
21	830-02-100	BAR - DOWNSTREAM GEARBOX CROSS	2
20	SPACER #A09-S-1.000-0.344-1.036	CHAIN GUIDE MOUNT	3
19	830-02-117	GUIDE - MAIN DRIVE CHAIN	1
18	ADCO#47422	TWO-PIECE CLAMP COLLAR, 35mm BORE, SS	1
17	SPACER #A09-S-1.875-0.422-0.179	DRIVE SHAFT CAPT	1
16	830-02-118	SHAFT - MAIN DRIVE	1
15	SPACER #M10-S-1.250-M10-3.250-M10	BEARING PLATE MOUNT	3
14	SUCTFL 207	35mm 2-HOLE BEARING	1
13	S398-02-109	PLATE - BEARING MOUNT	1
12	100-05-003	ASSEMBLY - #60-13T IDLER (WASHDOWN)	1
11	7710783	BRACKET - IDLER ADJUST	1
10	830-02-111	SHAFT - TRANSFER DRIVE SPLINE	2
9	S178-02-109	END CAP - TOLOMATIC	2
8	S304-02-104	HUB - FEMALE TIMING	4
7	S178-02-110	SLEEVE - TOLOMATIC	2
6	S178-02-118	SHAFT - TOLOMATIC DRIVE	2
5	100-05-002	ASSEMBLY - #50-15T IDLER (WASHDOWN)	2
4	IDLER BRKT	A27-1.250	2
3	830-02-104	SHAFT - TOLMATIC DRIVE	1
2	#11075	"LOVEJOY" SPIDER, L090-L095, URETHANE	2
1	S178-02-122	JAW COUPLING	4

THE INFORMATION CONTAINED IN THIS DRAWING IS THE SOLE PROPERTY OF ADCO MFG. ANY REPRODUCTION IN PART OR WHOLE WITHOUT THE WRITTEN PERMISSION OF ADCO MFG IS PROHIBITED.

MAIN DRIVE

ADCO
2170 ACADEMY AVE
SANGER, CA 93657
INFO@ADCOMFG.COM
559.875.5563

DRAWN BY: JJR	DATE: 02-16-15	SCALE: 1:7
REFERENCE: 5402-02-001	DRAWING NUMBER: 5624-02-001	SHEET 1/1 SIZE D

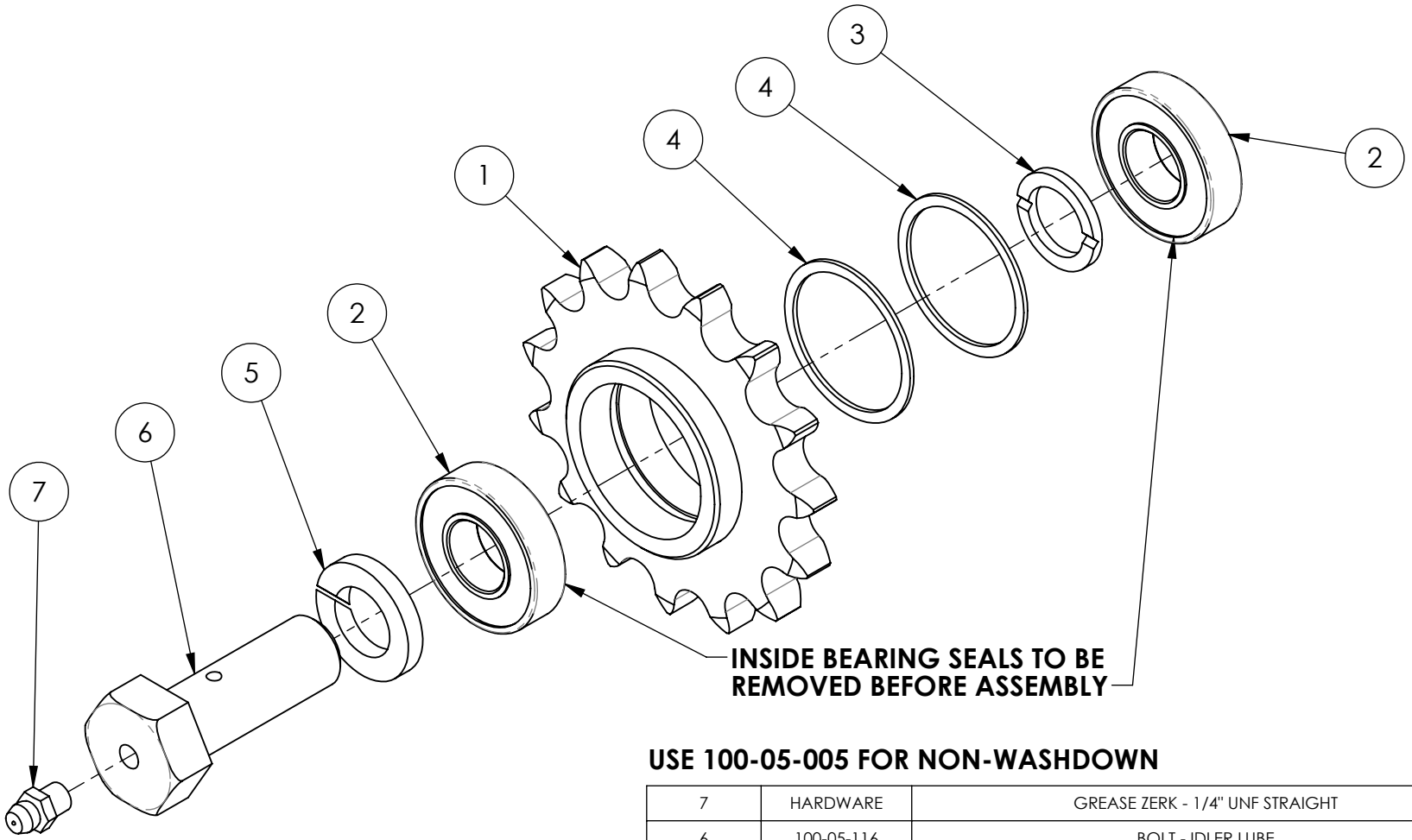

USE 100-05-005 FOR NON-WASHDOWN

ITEM NO.	PartNo	DESCRIPTION	QTY.
7	HARDWARE	GREASE ZERK - 1/4" UNF STRAIGHT	1
6	100-05-116	BOLT - IDLER LUBE	1
5	HARDWARE	WASHER - 5/8" SS LOCK	1
4	ADCO #39646	RETAINING RING - SPIROLOX #RR-137-S	2
3	100-05-115	SPACER - IDLER LUBE	1
2	ADCO #39090	BEARING - Ø5/8 RADIAL (R-10ZZST)	2
1	100-05-102	WELDMENT - #50-15T IDLER (WASHDOWN)	1

MATERIAL: SEE NOTES

TOLERANCES: 1/16" ± 1/64" .00 ± .01 .000 ± .005 .0000 ± .0005 1° ± 10'

OPPOSITE -3

SHOWN -2

MAKE AS: **QTY**

DESCRIPTION: ASSEMBLY - #50-15T IDLER (WASHDOWN)

JOB LABEL

MFG NOTE: BREAK ALL SHARP CORNERS & EDGES

THE INFORMATION CONTAINED IN THIS DRAWING IS THE SOLE PROPERTY OF ADCO MANUFACTURING. ANY REPRODUCTION IN PART OR WHOLE WITHOUT THE WRITTEN PERMISSION OF ADCO MANUFACTURING IS PROHIBITED.

2/08

ADCO Manufacturing
2170 Academy Avenue
Sanger, CA 93657
Tel: 559.875.5563
Fax: 559.875.7665

DRAWN BY: JJV

DATE: 1/9/09

SCALE: 3:4

REFERENCE:

DRAWING NUMBER: **100-05-002**

SHEET 1/1

SIZE A

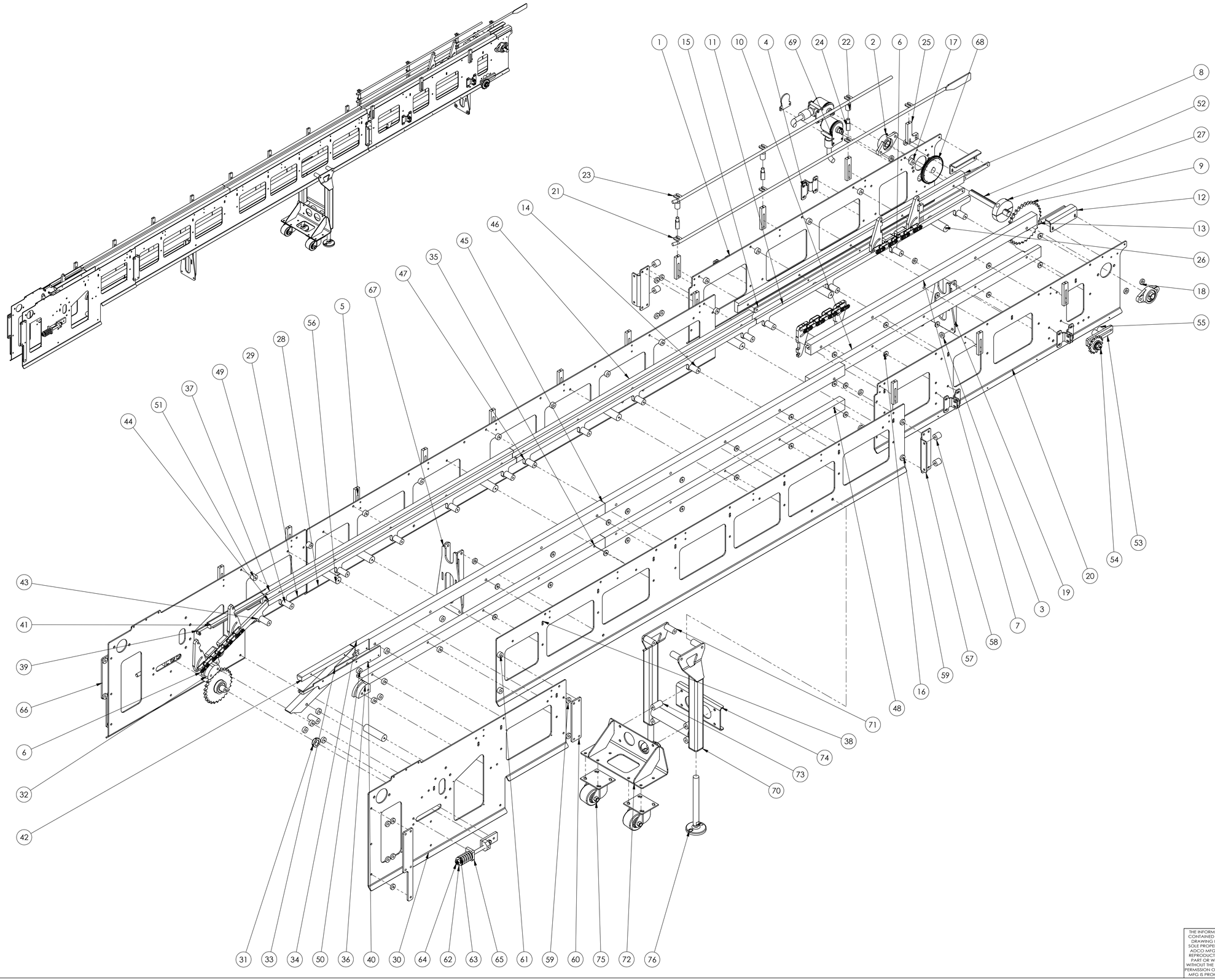

ITEM	PART NUMBER	DESCRIPTION	QTY
76	ADCO#42934	NGI HJ90 ARTICULATED FOOT, S.S., 1" UNC x 10" LG.	2
75	ADCO#	CASTER - 43209339	2
74	S304-20-125	CHANNEL - CASTER MOUNT BRACE	1
73	SPACER	M10-A-1.000-M8-1.938-M8	4
72	S304-20-124	WELDMENT - CASTER MOUNT	1
71	SPACER	M10-S-1.000-M10-2.070-M10	4
70	S624-03-131	WELDMENT - CONVEYOR LEG	1
69	S598-03-007	ASSEMBLY - ENCODER - TRACK	2
68	S624-21-001	MAIN GEAR FOR PULSE ENCODER	1
67	S624-03-139	WELDMENT - CONVEYOR MOUNT	1
66	S624-03-133	PLATE - CONVEYOR SPLICE	2
65	S624-03-135	BLOCK - TAKEUP	2
64	HARDWARE	HEX NUT, S.S. - 14MM	1
63	#11119	CENTURY SPRING - COMPRESSION S.S.	1
62	830-09-125	BUSHING - SPRING END	2
61	SPACER	A09-S-1.000-0.344-0.500	4
60	S624-03-136	PLATE - CONVEYOR SPLICE	2
59	SPACER	A09-S-1.000-0.344-0.250	22
58	SPACER	A09-S-1.000-0.344-1.071	4
57	S624-03-132	ANGLE - INFEED SPLICE / BRACE	2
56	SPACER	M10-S-1.250-M8-4.500-M8	2
55	SPACER	M10-S-1.000-M8-1.237-M8	2
54	100-05-002	ASSEMBLY - #50-15T IDLER (WASHDOWN)	1
53	IDLER BRKT	A27-1.250	1
52	S624-03-145	SHAFT - MAIN DRIVE	1
51	SPACER	A09-S-1.000-0.344-0.734	2
50	SPACER	A09-S-1.000-0.344-0.422	10
49	SPACER	M10-S-1.000-M8-2.000-M8	4
48	S624-03-128	TRACK - CHAIN RETURN	1
47	S624-03-127	BAR - HARKESS RUNNER	1
46	S624-03-126	BAR - PRODUCT SUPPORT	1
45	S624-03-125	TRACK - UPPER CHAIN	1
44	S624-03-144	BAR - HARKESS RUNNER	1
43	S624-03-143	BAR - HARKESS RUNNER	1
42	S624-03-123	BAR - TRANSAFER SUPPORT	1
41	S624-03-124	BAR - TRANSFER SUPPORT	1
40	S624-03-122	ANGLE - INDEX TRANSFER BRIDGE	1
39	S624-03-121	ANGLE - PRODUCUT SUPPORT AT INDEX	1
38	S624-03-120	PANEL - PRODUCT CONVEYOR	1
37	S624-03-119	BAR - PRODUCT SUPPORT	1
36	S624-03-118	BAR - IDLER RETRUN LOWER	1
35	S624-03-117	TRACK - CHAIN RETURN	1
34	S624-03-116	TRACK - UPPER CHAIN	1
33	S624-03-115	TRACK - AT CHAIN INCLINE	1
32	S624-03-113	BAR - IDLER RETRUN UPPER	1
31	S426-21-010	ADJUSTABLE TAKUP	1
30	S624-03-112	CHANNEL - PRODUCT CONVEYOR	1
29	S624-03-111	PANEL - PRODUCT CONVEYOR	1
28	S624-03-104	PANEL - PRODUCT CONVEYOR	1
27	S624-03-147	PRODUCT CONVEYOR LUG BACKSTOP	1
26	SPACER	M10-S-1.250-M8-4.000-M8	6
25	S426-03-104	BAR - SIDE GUIDE MOUNT DWNSTRM	1
24	S426-03-117	BAR - UPPER SIDE GUDIE MOUNT	3
23	S426-03-116	WELDMENT - TALL PRODUCT GUIDE	1
22	S304-03-119	SIDE GUIDE VERTICAL SPACER	3
21	S426-03-115	WELDMENT - PRODUCT GUIDE	1
20	S624-03-106	PANEL - PRODUCT CONVEYOR	1
19	S624-03-107	WELDMENT - CONVEYOR MOUNT	1
18	A09-S-1.000-0.468-0.250	SPACER	4
17	SPACER	A09-S-1.000-0.344-0.484	13
16	SPACER	A09-S-1.000-0.344-0.172	26
15	S426-03-109	PLATE - PRODUCT SUPPORT MOUNT	1
14	SPACER	M10-S-1.000-M8-1.750-M8	12
13	NUTPLATE	M24-S-5.375-6.375-0.750-0.250-M6	2
12	S624-03-142	ANGLE - PRODUCT SUPPORT	2
11	S624-03-130	BAR - HARKESS RUNNER	1
10	S426-03-102	TRACK - LOWER CHAIN	1
9	S426-03-108	SPROCKET - MAIN DRIVE	1
8	S426-03-101	BAR - PRODUCT SUPPORT	1
7	S426-03-100	TRACK - UPPER CHAIN	1
6	S624-03-100	ASSEMBLY - FLIGHTED CHAIN	2
5	S624-03-137	BAR - SIDE GUIDE MOUNT	15
4	S426-03-118	BRACKET - CONVEYOR PANEL	9
3	SPACER	A09-S-1.000-0.422-0.250	6
2	#SUCTFL 205	IPTCI 2 BOLT FLANGE BEARING Ø25mm ADCO# 41430	2
1	S624-03-105	PANEL - PRODUCT CONVEYOR	1

THE INFORMATION CONTAINED IN THIS DRAWING IS THE SOLE PROPERTY OF ADCO MFG. ANY REPRODUCTION IN PART OR WHOLE WITHOUT THE WRITTEN PERMISSION OF ADCO MFG IS PROHIBITED.

ASSEMBLY - PRODUCT CONVEYOR

ADCO
2170 ACADEMY AVE
SANGER, CA 93657
INFO@ADCOMFG.COM
559.875.5563

DRAWN BY: JJR
DATE: 2/27/15
SCALE: 1:8
REFERENCE:
DRAWING NUMBER: 5624-03-002
SHEET 1/1
SIZE D

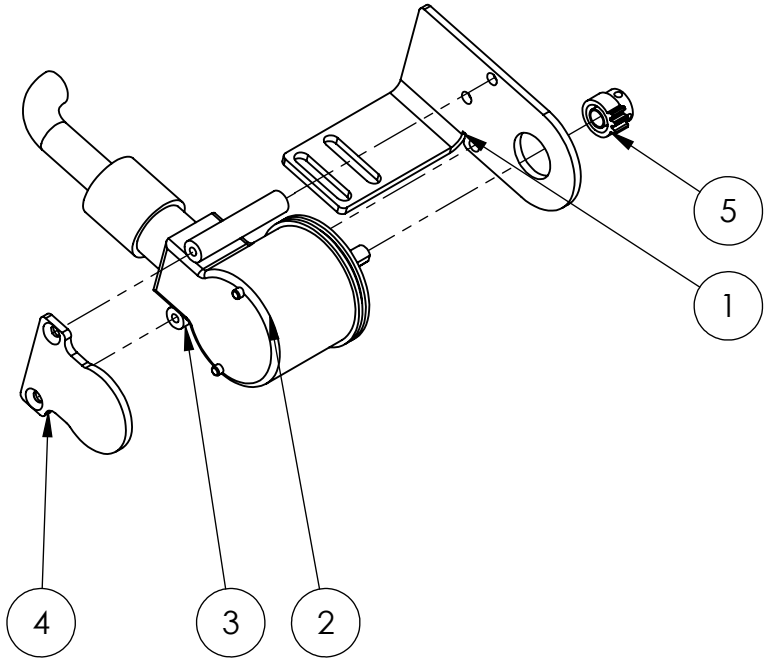

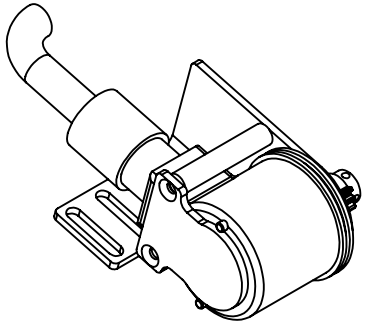

ITEM	PART NUMBER	DESCRIPTION	QTY
5	5598-03-157	SPUR GEAR - ENCODER	1
4	5308-17-119	PLATE, ENCODER BACK SUPPORT	1
3	SPACER	M10-S-0.500-M6-2.563-M6 (ENCODER MOUNT)	2
2	ADCO #	ENCODER, FANUC (A860-0301-T001)	1
1	5598-03-162	ENCODER MOUNT	1

08/13

ASSEMBLY - ENCODER - TRACK

ADCO where products meet packaging
2170 ACADEMY AVE
SANGER, CA 93657
INFO@ADCOMFG.COM
559.875.5563

DRAWN BY: JJR | DATE: 9/16/14 | SCALE: 1:4

REFERENCE:

DRAWING NUMBER: **5598-03-007**

SHEET 1/1 | SIZE A

THE INFORMATION CONTAINED IN THIS DRAWING IS THE SOLE PROPERTY OF ADCO MANUFACTURING. ANY REPRODUCTION IN PART OR WHOLE WITHOUT WRITTEN PERMISSION OF ADCO MFG IS PROHIBITED.

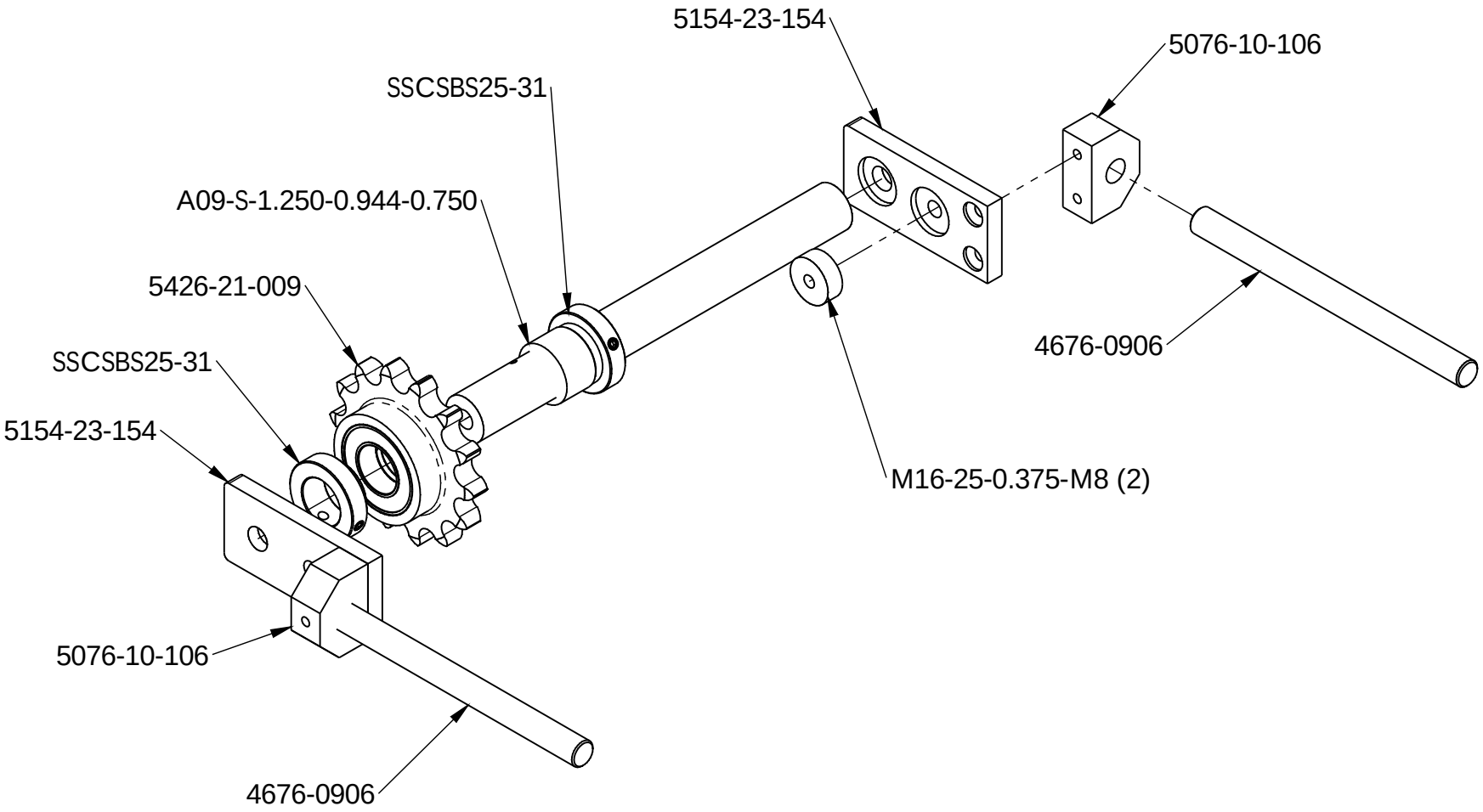

10/11

ADJUSTABLE TAKUP

ADCO
2170 ACADEMY AVE
SANGER, CA 93657
INFO@ADCOMFG.COM
559.875.5563

DRAWN BY: N.S.	DATE: 03-21-13	SCALE: 1:3	
REFERENCE: 5154-23-014	DRAWING NUMBER: **5426-21-010**	SHEET 1/1	SIZE A

THE INFORMATION CONTAINED IN THIS DRAWING IS THE SOLE PROPERTY OF ADCO MANUFACTURING. ANY REPRODUCTION IN PART OR WHOLE WITHOUT WRITTEN PERMISSION OF ADCO MFG IS PROHIBITED.

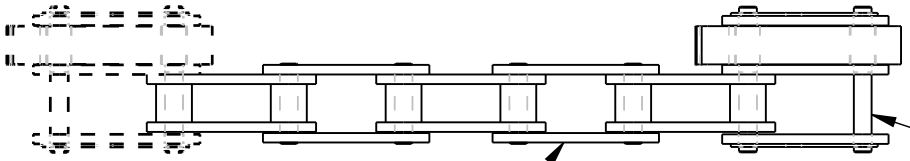

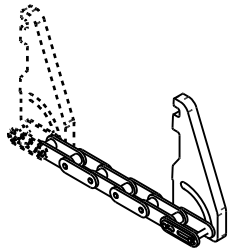

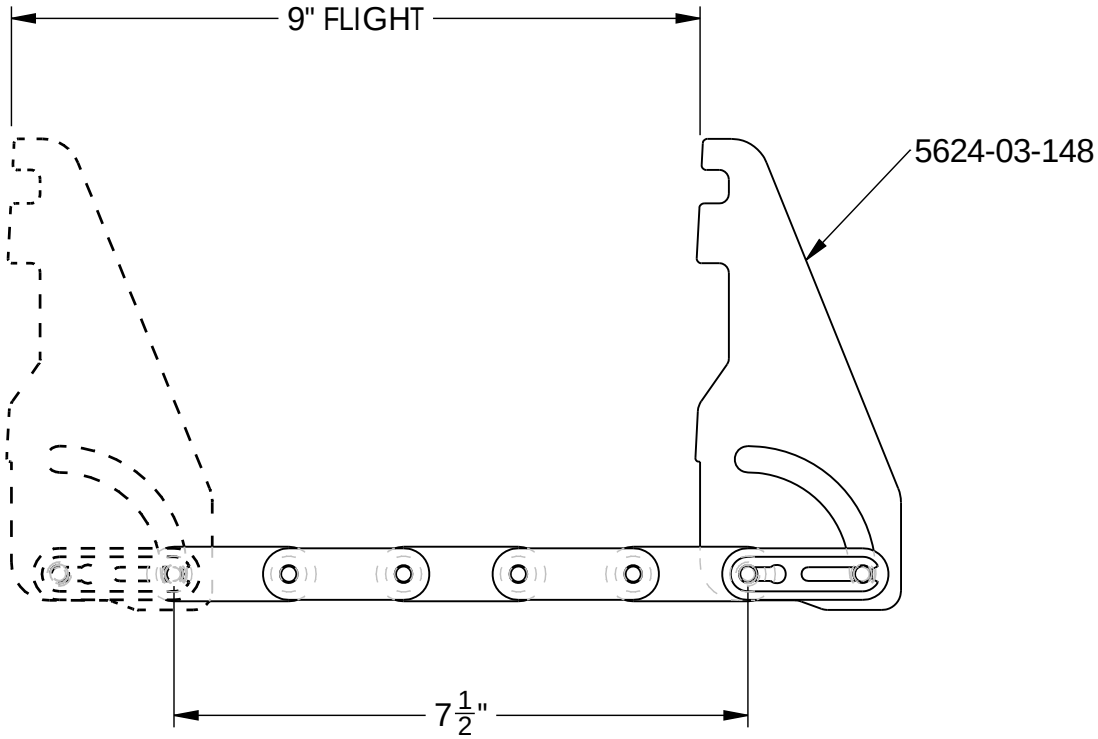

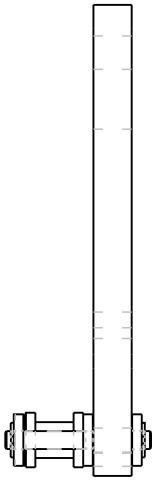

ONE FLIGHT SHOWN - 46 FLIGHTS NEEDED
46 FLIGHTS @ 9" CENTER = 414" LG CHAIN

MFG NOTE: BREAK ALL SHARP CORNERS & EDGES

THE INFORMATION CONTAINED IN THIS DRAWING IS THE SOLE PROPERTY OF ADCO MANUFACTURING. ANY REPRODUCTION IN PART OR WHOLE WITHOUT THE WRITTEN PERMISSION OF ADCO MANUFACTURING IS PROHIBITED.

8/13

MATERIAL:	TOLERANCES: 1/16" ± 1/64" .00 ± .01 .000 ± .005 .0000 ± .0005 1° ± 10'	OPPOSITE -3	
		SHOWN -2	
DESCRIPTION: ASSMEBLY - MAIN PROD CONV CHAIN		**MAKE AS:**	**QTY**

ADCO where products meet packaging
2170 ACADEMY AVE
SANGER, CA 93657
INFO@ADCOMFG.COM
559.875.5563

DRAWN BY: N.S.	DATE: 04-01-15	SCALE: 2:5	
REFERENCE: -	**DRAWING NUMBER:** **5624-03-149**	SHEET 1/1	SIZE A

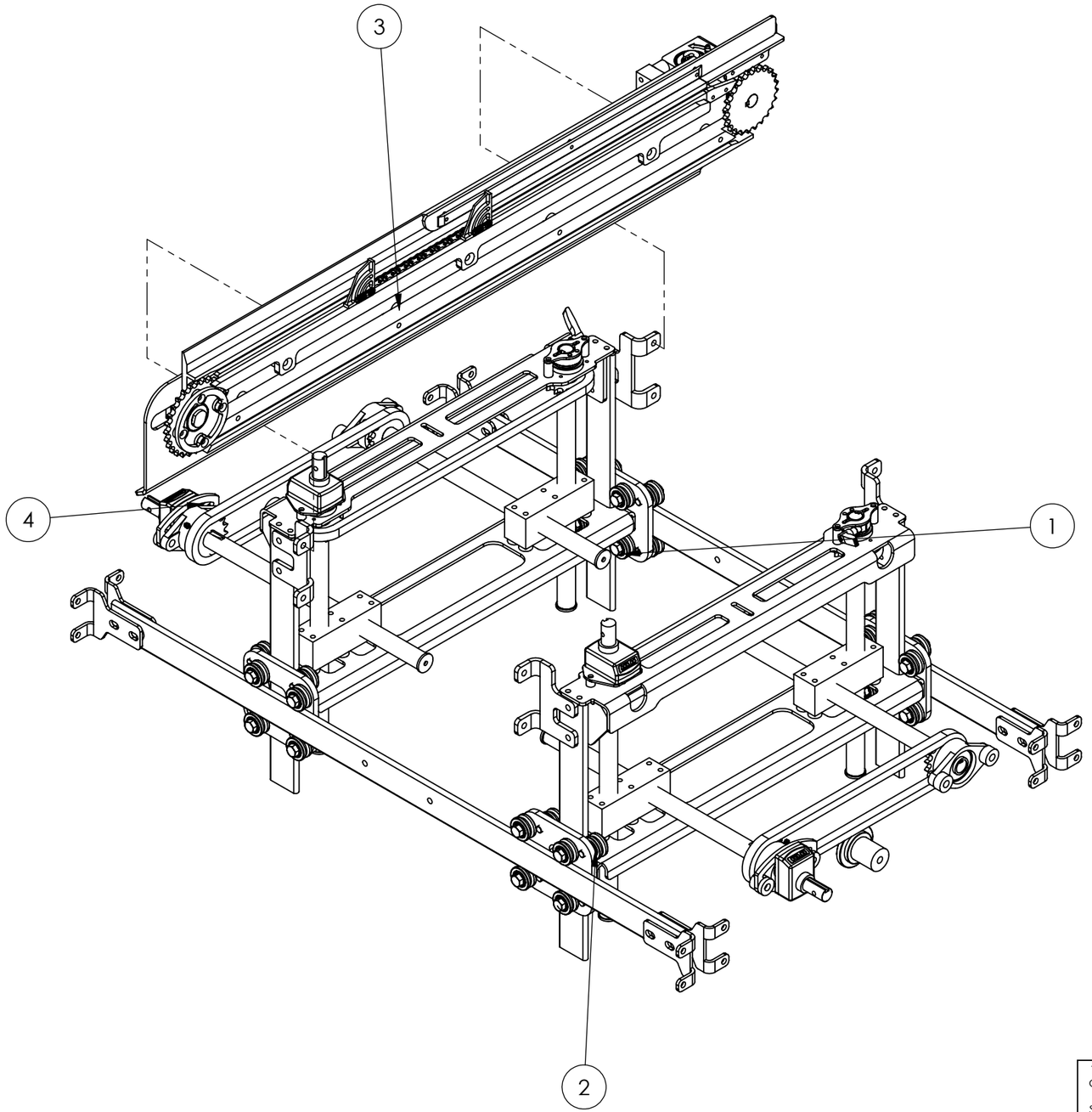

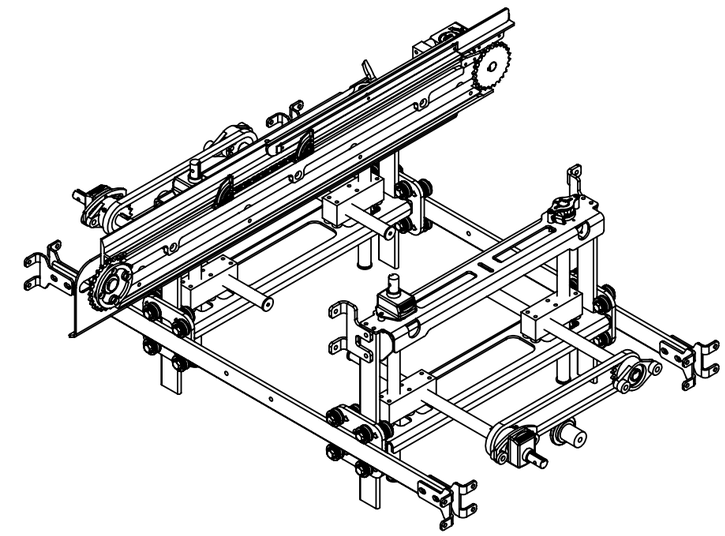

ITEM	PART NUMBER	DESCRIPTION	QTY
4	5624-04-006	ASSEMBLY - SLEEVE TRANSFER	1
3	5624-04-002	ASSEMBLY - CARTON TRANSFER CHAIN ASSY	1
2	5624-04-005	ASSEMBLY - TRANSFER CHAIN ADJUST VERT. & HORIZ. (LEFT)	1
1	5624-04-004	ASSEMBLY - TRANSFER CHAIN ADJUST VERT. & HORIZ.(RIGHT)	1

THE INFORMATION CONTAINED IN THIS DRAWING IS THE SOLE PROPERTY OF ADCO MFG. ANY REPRODUCTION IN PART OR WHOLE WITHOUT THE WRITTEN PERMISSION OF ADCO MFG IS PROHIBITED.

ASSEMBLY - SLEEVE TRANSFER

ADCO
2170 ACADEMY AVE
SANGER, CA 93657
INFO@ADCOMFG.COM
559.875.5563

DRAWN BY: JJR | DATE: 02-16-15 | SCALE: 1:7

REFERENCE: 5598-04-001 | DRAWING NUMBER: **5624-04-001** | SHEET 1/1 | SIZE B

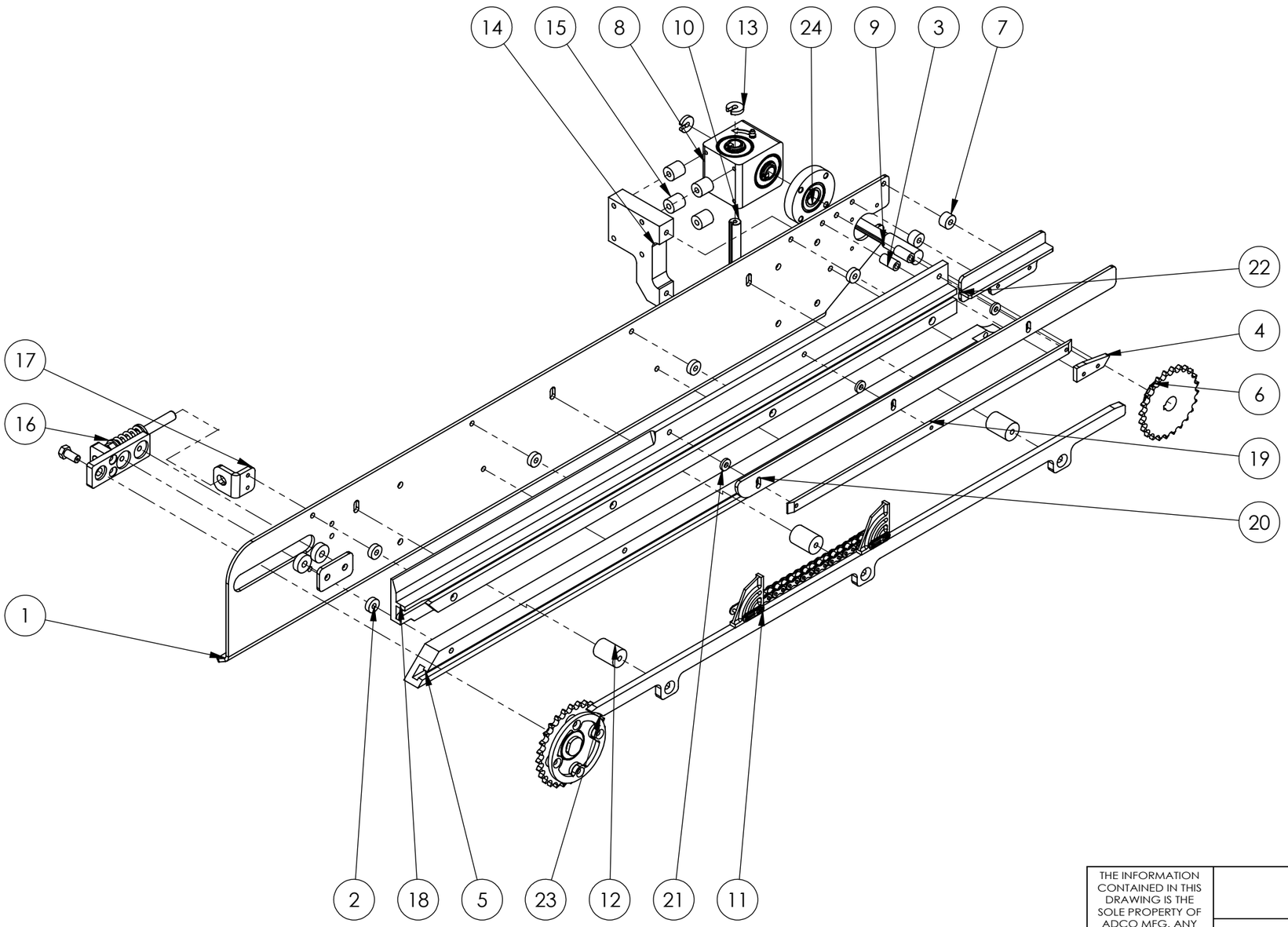

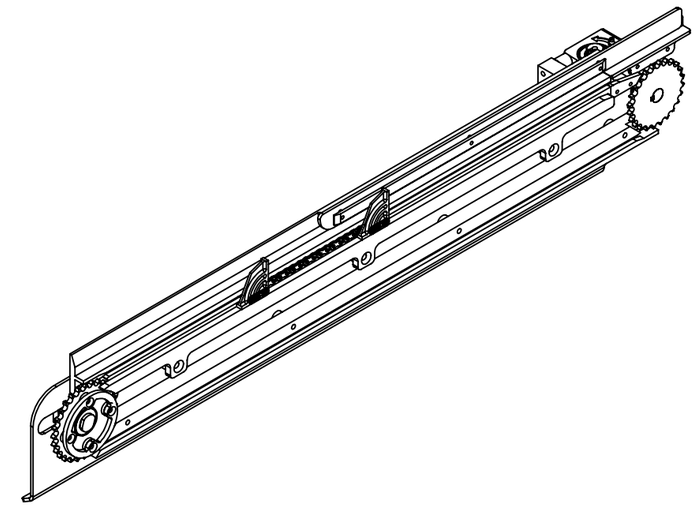

ITEM	PART NUMBER	DESCRIPTION	QTY
24	SBGRN6004ZZ	"MISUMI" HOUSED BEARING 20mm	1
23	5624-04-105-2	PLATE - HARKESS LUG SUPPORT	1
22	5624-04-104	WELDMENT - CARTON RUNNER	1
21	SPACER	A09-S-0.625-0.265-0.125	3
20	5598-04-101	RAIL - OVERHEAD HOLD	1
19	5598-04-102	PLATE - SLEEVE RUNNER MOUNT	1
18	5624-04-100-2	RAIL - TOP CHAIN	1
17	830-04-133	BRACKET - IDLER TENSION	1
16	830-04-010	ASSEMBLY - ADJUSTABLE IDLER	1
15	SPACER	A09-S-0.750-0.281-0.807	4
14	5624-04-113	BAR - GEARBOX MOUNT	1
13	100-20-103	CAP - GEARBOX END	2
12	SPACER	M10-S-1.000-M8-1.375-M8	3
11	5426-04-101	ASSEMBLY - TRANSFER CHAIN, HARKESS 9"	1
10	5319-04-104	SHAFT - TRANSFER VERTICAL @ TOLOMATIC	1
9	5624-04-106	SHAFT - TRANSFER HORIZONTAL @ TOLOMATIC	1
8	ADCO #51732	TOLOMATIC, P-480-2010, CR SERIES, 1:1 RATIO, (15mm-15mm BORE) LH (FOOD GRADE GREASE)	1
7	SPACER	A09-S-0.750-0.281-0.446	2
6	5624-04-107	SPROCKET - CARTON TRANS DRIVE	1
5	5267-04-113-2	RAIL - CHAIN RETURN	1
4	5267-04-114	RAIL - TOP NOSE	1
3	SPACER	A09-S-0.500-0.281-0.984	2
2	SPACER	A09-S-0.750-0.281-0.250	8
1	5624-04-101-2	PANEL - CARTON TRANSFER	1

THE INFORMATION CONTAINED IN THIS DRAWING IS THE SOLE PROPERTY OF ADCO MFG. ANY REPRODUCTION IN PART OR WHOLE WITHOUT THE WRITTEN PERMISSION OF ADCO MFG IS PROHIBITED.

10/1

ASSEMBLY - CARTON TRANSFER CHAIN ASSY

ADCO
2170 ACADEMY AVE
SANGER, CA 93657
INFO@ADCOMFG.COM
559.875.5563

DRAWN BY: JJR | DATE: 02-16-15 | SCALE: 1:6

REFERENCE: 5598-04-004 | DRAWING NUMBER: **5624-04-002** | SHEET 1/1 | SIZE B

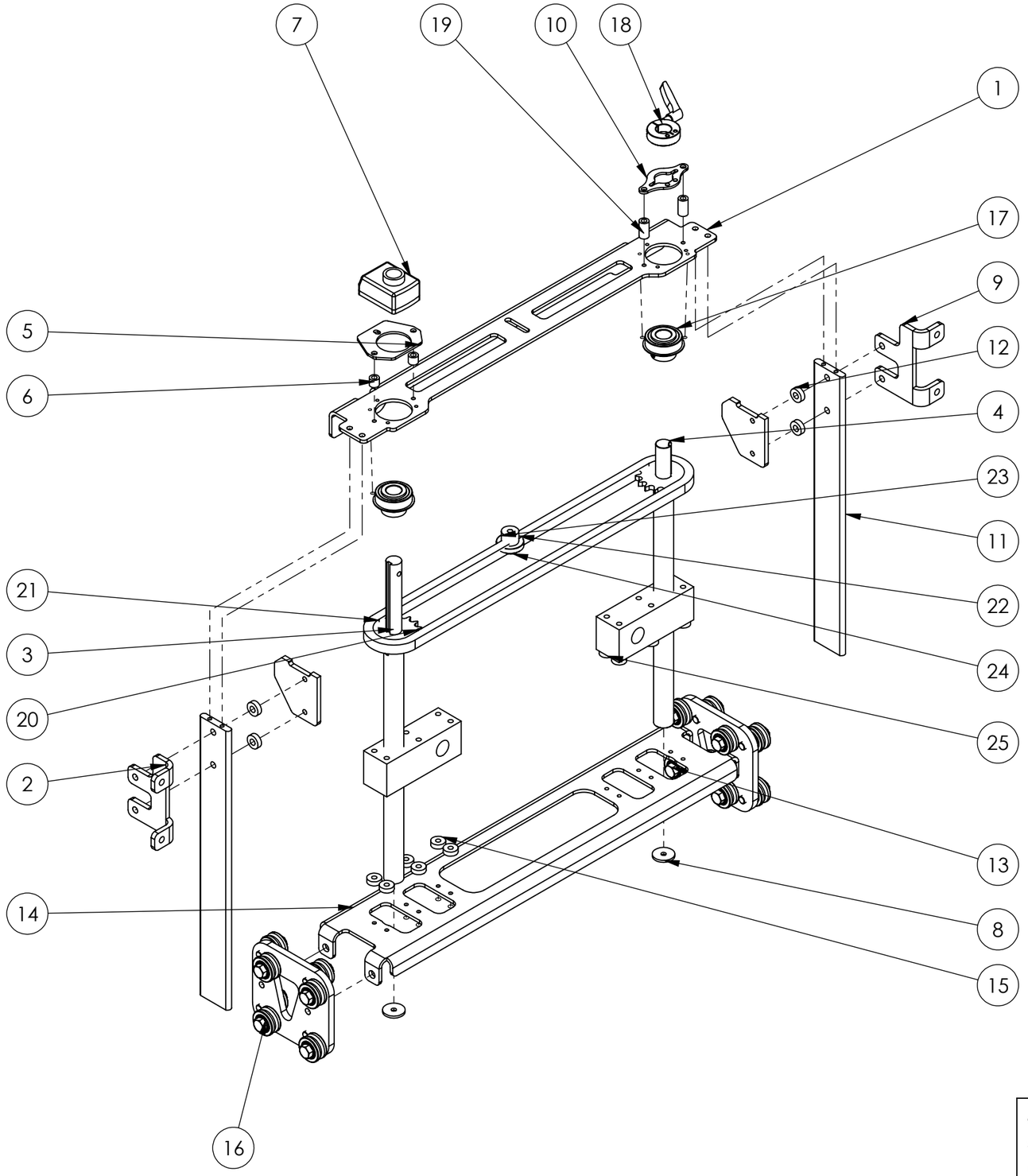

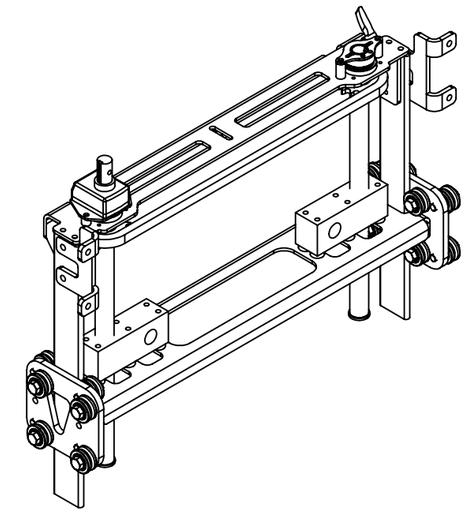

ITEM	PART NUMBER	DESCRIPTION	QTY
25	5624-04-111	BLOCK - VERT + HORIZ ADJUSTMENT	2
24	SPACER	A09-S-0.875-0.265-0.179	1
23	830-04-119	IDLER - VERTICAL ADJ CHAIN	1
22	830-04-118	IDLER SPINDLE - VERTICAL ADJ CHAIN	1
21	#40 ADJUST CHAIN	34" #40 AQUA CHAIN	1
20	830-04-110	SPROCKET - PANEL ADJUST	2
19	SPACER	A09-S-0.500-0.281-0.938	2
18	ADCO#	MISUMI , SSCJKJL20-M CLAMP COLLAR	1
17	SSER-204	IPTCI INSERT BEARING - SSER-204 - 20MM ID X 47MM OD X 15.9MM WIDE	2
16	830-04-008	ASSEMBLY - INA ROLLER CARRIAGE PLATE	1
15	SPACER	A09-S-0.750-0.265-0.250	12
14	830-04-102	CHANNEL - TRASFER CARRIAGE TIE	1
13	830-04-006	ASSEMBLY - INA ROLLER CARRIAGE PLATE	1
12	SPACER	A09-S-0.750-0.344-0.250	4
11	5624-04-112	RAIL - SLEEVE TRANS VERT SUPPORT	2
10	830-04-107	PLATE - CLAMP COLLAR MOUNTNG PLATE	1
9	830-04-128-2	BRACKET - TRANSFER PANEL	1
8	SPACER	A09-S-1.125-0.265-0.120	2
7	ADCO #51272	DIGITAL COUNTER - SIKO (DA09S-04-20-0-E-VA20-O-A-K-AD-OZP-BP-ORP)	1
6	SPACER	A09-S-0.500-0.281-0.438	2
5	5178-04-139	PLATE - SIKO MOUNT	1
4	830-04-108	SCREW SHAFT - VERTICAL ADJUST	1
3	830-04-109	SCREW SHAFT - VERTICAL ADJUST @ HANDLE	1
2	830-04-128-2	BRACKET - TRANSFER PANEL	1
1	830-04-105	WELDMENT - TRANSFER VERTICAL SUPPORT	1

THE INFORMATION CONTAINED IN THIS DRAWING IS THE SOLE PROPERTY OF ADCO MFG. ANY REPRODUCTION IN PART OR WHOLE WITHOUT THE WRITTEN PERMISSION OF ADCO MFG IS PROHIBITED.

10/11

ASSEMBLY - TRANSFER CHAIN ADJUST VERT. & HORIZ.(RIGHT)

ADCO
2170 ACADEMY AVE
SANGER, CA 93657
INFO@ADCOMFG.COM
559.875.5563

DRAWN BY: JJR | DATE: 02-16-15 | SCALE: 1:6

REFERENCE: 5598-04-007 | DRAWING NUMBER: **5624-04-004** | SHEET 1/1 | SIZE B

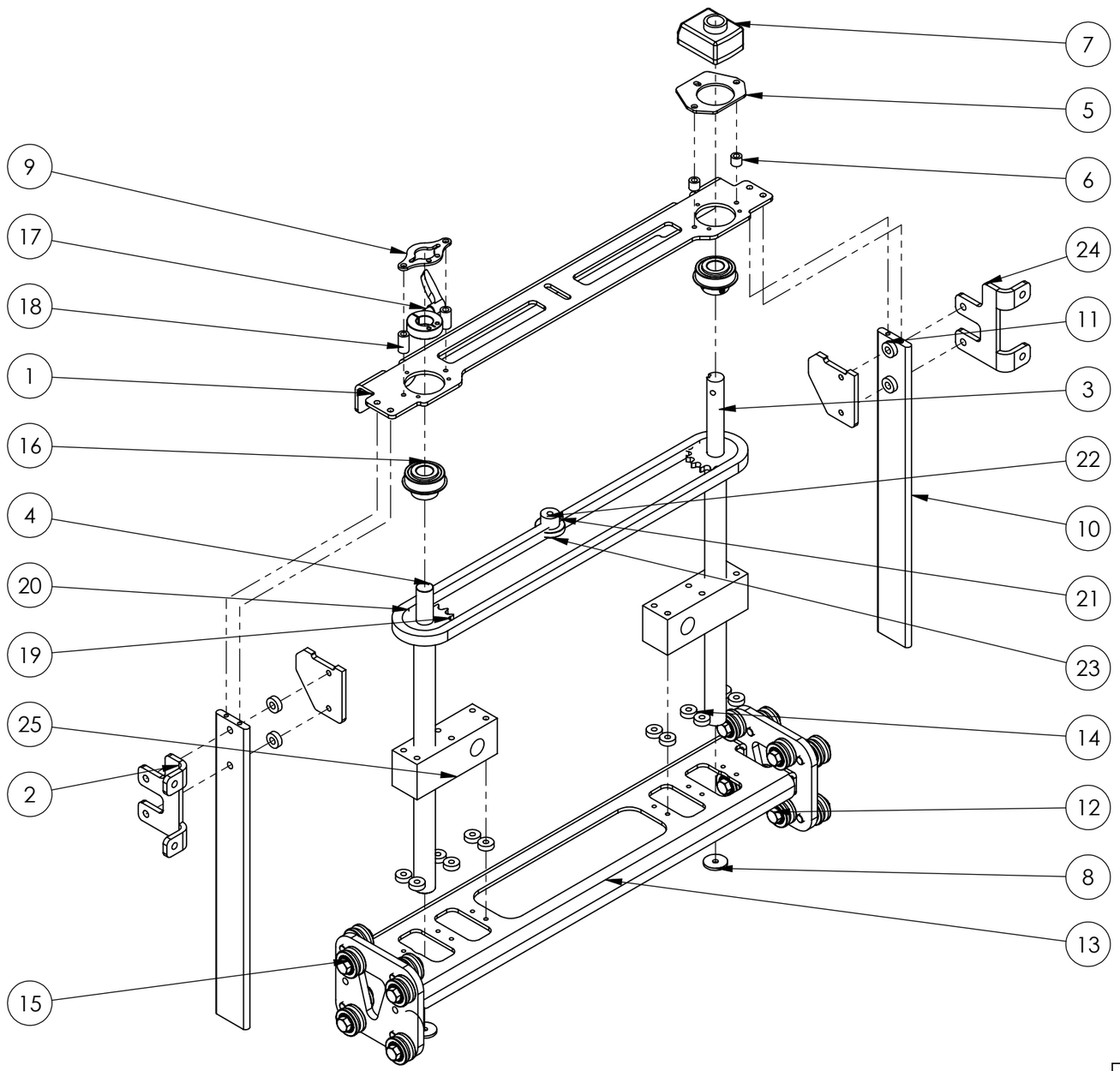

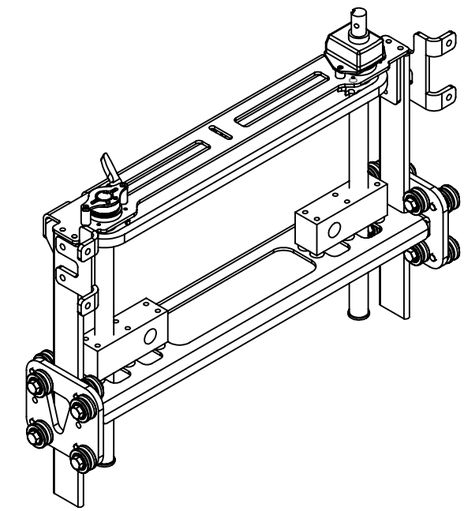

ITEM	PART NUMBER	DESCRIPTION	QTY
25	5624-04-111	BLOCK - VERT + HORIZ ADJUSTMENT	2
24	830-04-128-2	BRACKET - TRANSFER PANEL	1
23	SPACER	A09-S-0.875-0.265-0.179	1
22	830-04-119	IDLER - VERTICAL ADJ CHAIN	1
21	830-04-118	IDLER SPINDLE - VERTICAL ADJ CHAIN	1
20	#40 ADJUST CHAIN	34" #40 AQUA CHAIN	1
19	830-04-110	SPROCKET - PANEL ADJUST	2
18	SPACER	A09-S-0.500-0.281-0.938	2
17	ADCO#	MISUMI , SSCJKJL20-M CLAMP COLLAR	1
16	SSER-204	IPTCI INSERT BEARING - SSER-204 - 20MM ID X 47MM OD X 15.9MM WIDE	2
15	830-04-008	ASSEMBLY - INA ROLLER CARRIAGE PLATE	1
14	SPACER	A09-S-0.750-0.265-0.250	12
13	830-04-102	CHANNEL - TRASFER CARRIAGE TIE	1
12	830-04-006	ASSEMBLY - INA ROLLER CARRIAGE PLATE	1
11	SPACER	A09-S-0.750-0.344-0.250	4
10	5624-04-112	RAIL - SLEEVE TRANS VERT SUPPORT	2
9	830-04-107	PLATE - CLAMP COLLAR MOUNTNG PLATE	1
8	SPACER	A09-S-1.125-0.265-0.120	2
7	ADCO #51272	DIGITAL COUNTER - SIKO (DA09S-04-20-0-E-VA20-O-A-K-AD-OZP-BP-ORP)	1
6	SPACER	A09-S-0.500-0.281-0.438	2
5	5178-04-139	PLATE - SIKO MOUNT	1
4	830-04-108	SCREW SHAFT - VERTICAL ADJUST	1
3	830-04-109	SCREW SHAFT - VERTICAL ADJUST @ HANDLE	1
2	830-04-128-2	BRACKET - TRANSFER PANEL	1
1	830-04-105	WELDMENT - TRANSFER VERTICAL SUPPORT	1

THE INFORMATION CONTAINED IN THIS DRAWING IS THE SOLE PROPERTY OF ADCO MFG. ANY REPRODUCTION IN PART OR WHOLE WITHOUT THE WRITTEN PERMISSION OF ADCO MFG IS PROHIBITED.

10/11

ASSEMBLY - TRANSFER CHAIN ADJUST VERT. & HORIZ. (LEFT)

ADCO
2170 ACADEMY AVE
SANGER, CA 93657
INFO@ADCOMFG.COM
559.875.5563

DRAWN BY: JJR	DATE: 02-16-15	SCALE: 1:6	
REFERENCE: 5598-04-011	DRAWING NUMBER: **5624-04-005**	SHEET 1/1	SIZE B

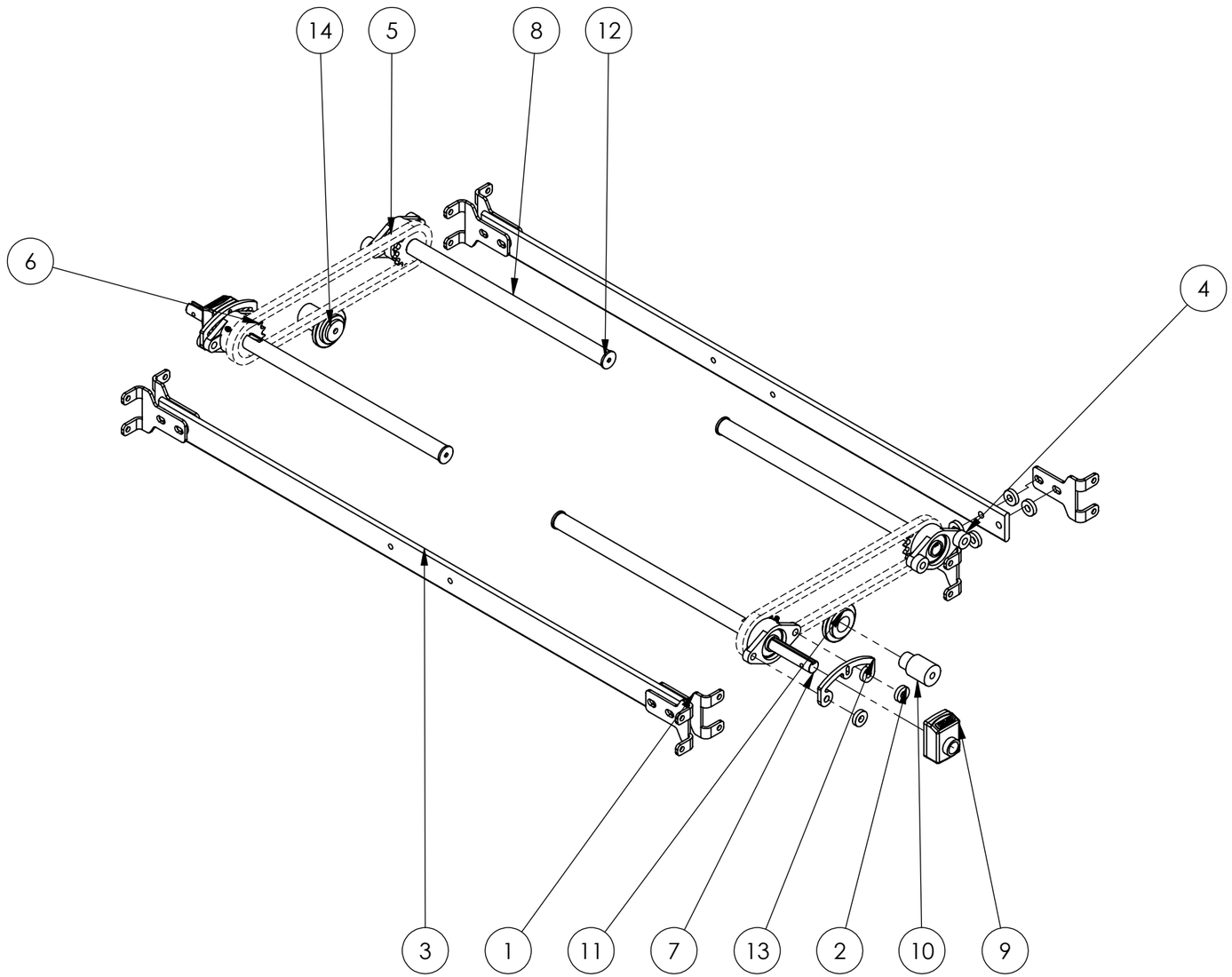

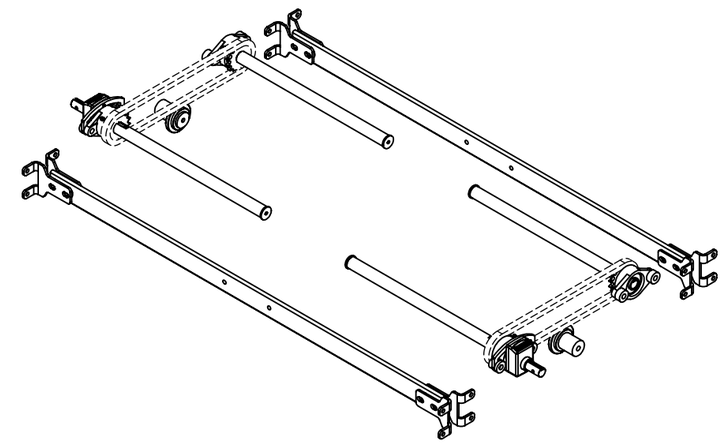

ITEM	PART NUMBER	DESCRIPTION	QTY
14	SPACER	A09-S-1.375-0.344-0.179	2
13	5598-11-113	PLATE - SIKO MOUNT	2
12	SPACER	A09-S-1.125-0.265-0.120	4
11	4525-0526	IDLER, #40-18 TOOTHLESS	2
10	5624-04-108	IDLER SPINDLE	2
9	ADCO #51273	SIKO - DIGITAL INDICATOR (DA09S-02-20-0-I-VA20-O-A-K-AD-OZP-BP-ORP)	2
8	5624-04-109	SCREW SHAFT - HORIZONTAL ADJUST	2
7	5624-04-110	SCREW SHAFT - HORIZONTAL ADJUST @ HANDLE	2
6	830-04-110	SPROCKET - PANEL ADJUST	4
5	#SUCTFL 204	2 BOLT FLANGE BEARING 20mm ADCO# 44679	4
4	SPACER	A09-S-1.000-0.422-0.500	4
3	830-04-114	RAIL - TRANSFER SUPPORT	2
2	SPACER	A09-S-1.000-0.422-0.250	20
1	5178-04-149	BRACKET - SUPPORT RAIL	8

THE INFORMATION CONTAINED IN THIS DRAWING IS THE SOLE PROPERTY OF ADCO MFG. ANY REPRODUCTION IN PART OR WHOLE WITHOUT THE WRITTEN PERMISSION OF ADCO MFG IS PROHIBITED.

10/11

ASSEMBLY - SLEEVE TRANSFER

ADCO
2170 ACADEMY AVE
SANGER, CA 93657
INFO@ADCOMFG.COM
559.875.5563

DRAWN BY: JJR | DATE: 02-16-15 | SCALE: 1:8

REFERENCE: 5598-04-001 | DRAWING NUMBER: **5624-04-006** | SHEET 1/1 | SIZE B

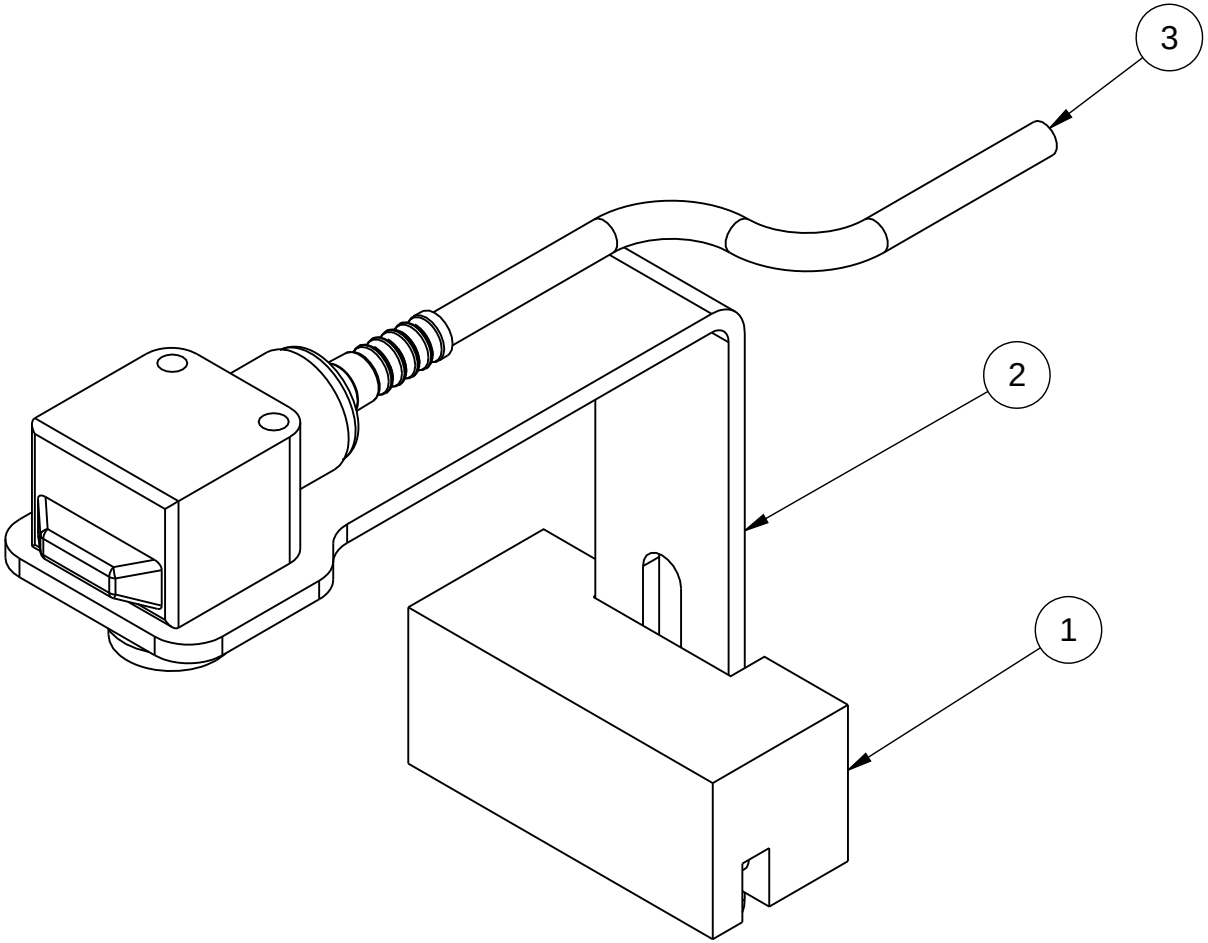

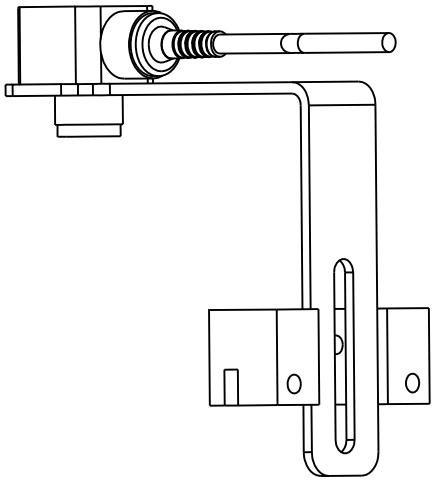

ITEM	PART NUMBER	DESCRIPTION	QTY
3	ADCO#	AB PHOTOEYE	1
2	5624-04-116	PE. MOUNT CARTON CONFIRM	1
1	5624-04-115	BAR - PE. MOUNT	1

08/13

ASS'Y PHOTOEYE MOUNT CARTON CONFIRM

ADCO where products meet packaging
2170 ACADEMY AVE
SANGER, CA 93657
INFO@ADCOMFG.COM
559.875.5563

DRAWN BY: RGV | DATE: 4/9/15 | SCALE: 1:1

REFERENCE:

DRAWING NUMBER: **5624-04-007** | SHEET 1/1 | SIZE A

THE INFORMATION CONTAINED IN THIS DRAWING IS THE SOLE PROPERTY OF ADCO MANUFACTURING. ANY REPRODUCTION IN PART OR WHOLE WITHOUT WRITTEN PERMISSION OF ADCO MFG IS PROHIBITED.

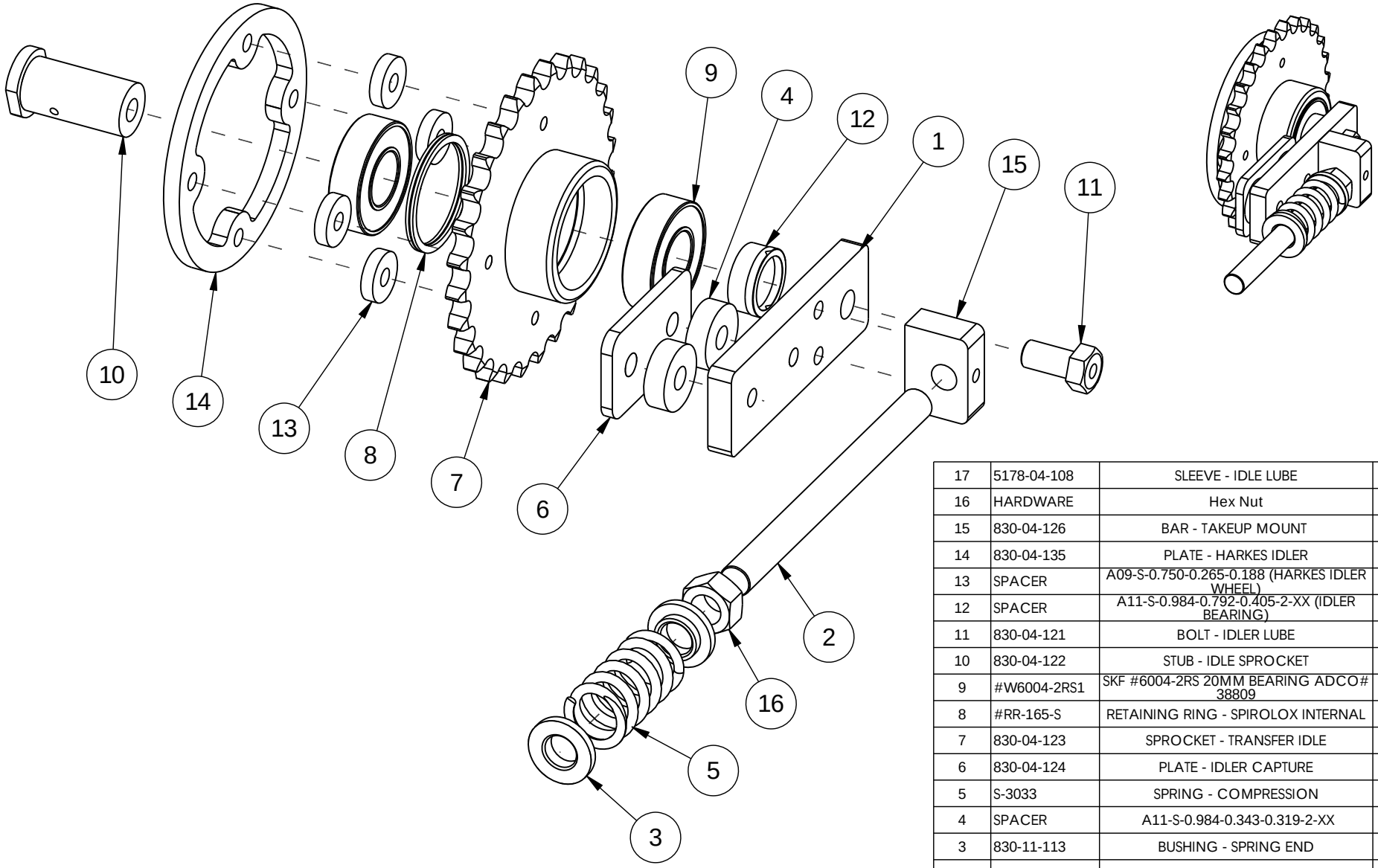

ITEM	PART NUMBER	DESCRIPTION	QTY
17	5178-04-108	SLEEVE - IDLE LUBE	1
16	HARDWARE	Hex Nut	1
15	830-04-126	BAR - TAKEUP MOUNT	1
14	830-04-135	PLATE - HARKES IDLER	1
13	SPACER	A09-S-0.750-0.265-0.188 (HARKES IDLER WHEEL)	4
12	SPACER	A11-S-0.984-0.792-0.405-2-XX (IDLER BEARING)	1
11	830-04-121	BOLT - IDLER LUBE	1
10	830-04-122	STUB - IDLE SPROCKET	1
9	#W6004-2RS1	SKF #6004-2RS 20MM BEARING ADCO# 38809	2
8	#RR-165-S	RETAINING RING - SPIROLOX INTERNAL	2
7	830-04-123	SPROCKET - TRANSFER IDLE	1
6	830-04-124	PLATE - IDLER CAPTURE	1
5	S-3033	SPRING - COMPRESSION	1
4	SPACER	A11-S-0.984-0.343-0.319-2-XX	2
3	830-11-113	BUSHING - SPRING END	2
2	830-04-127	SCREW - TRANSFER TAKEUP	1
1	830-04-117	PLATE - CHAIN IDLER SLIDE PLATE	1

08/13

ASSEMBLY - ADJUSTABLE IDLER

ADCO where products meet packaging
2170 ACADEMY AVE
SANGER, CA 93657
INFO@ADCOMFG.COM
559.875.5563

DRAWN BY: CR | DATE: 06/09/14 | SCALE: 1:2

REFERENCE: 5319-11-005 | DRAWING NUMBER: **830-04-010** | SHEET 1/1 | SIZE A

THE INFORMATION CONTAINED IN THIS DRAWING IS THE SOLE PROPERTY OF ADCO MANUFACTURING. ANY REPRODUCTION IN PART OR WHOLE WITHOUT WRITTEN PERMISSION OF ADCO MFG IS PROHIBITED.

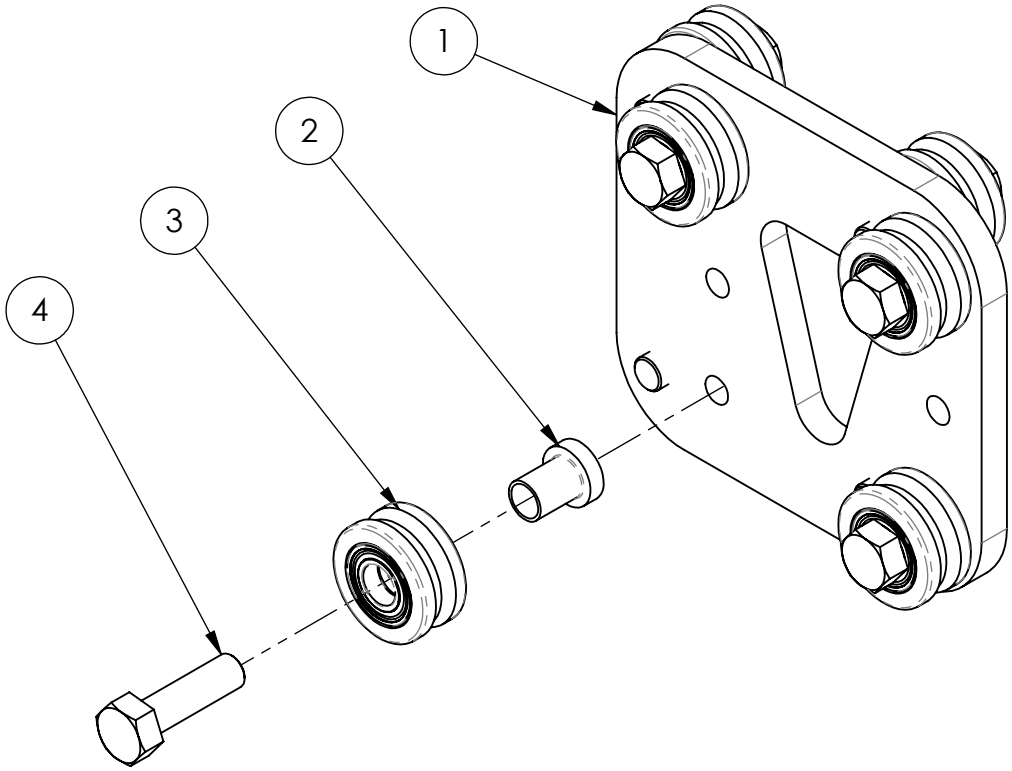

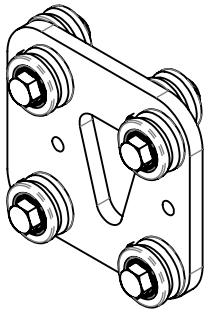

ITEM	PART NUMBER	DESCRIPTION	QTY
4	HARDWARE	BOLT - 10mm X 40mm LG SS HEX HEAD	8
3	ADCO #53608	ASSEMBLY - 52 ROLLER (WASHDOWN)	8
2	100-38-102	SPINDLE - SIZE 52 ROLLER	8
1	830-04-100	PLATE - INA BEARING MOUNT	1

08/13

ASSEMBLY - INA ROLLER CARRIAGE PLATE

ADCO where products meet packaging
2170 ACADEMY AVE
SANGER, CA 93657
INFO@ADCOMFG.COM
559.875.5563

DRAWN BY: CR | DATE: 06/09/14 | SCALE: 1:2

REFERENCE: - | DRAWING NUMBER: **830-04-008** | SHEET 1/1 | SIZE A

THE INFORMATION CONTAINED IN THIS DRAWING IS THE SOLE PROPERTY OF ADCO MANUFACTURING. ANY REPRODUCTION IN PART OR WHOLE WITHOUT WRITTEN PERMISSION OF ADCO MFG IS PROHIBITED.

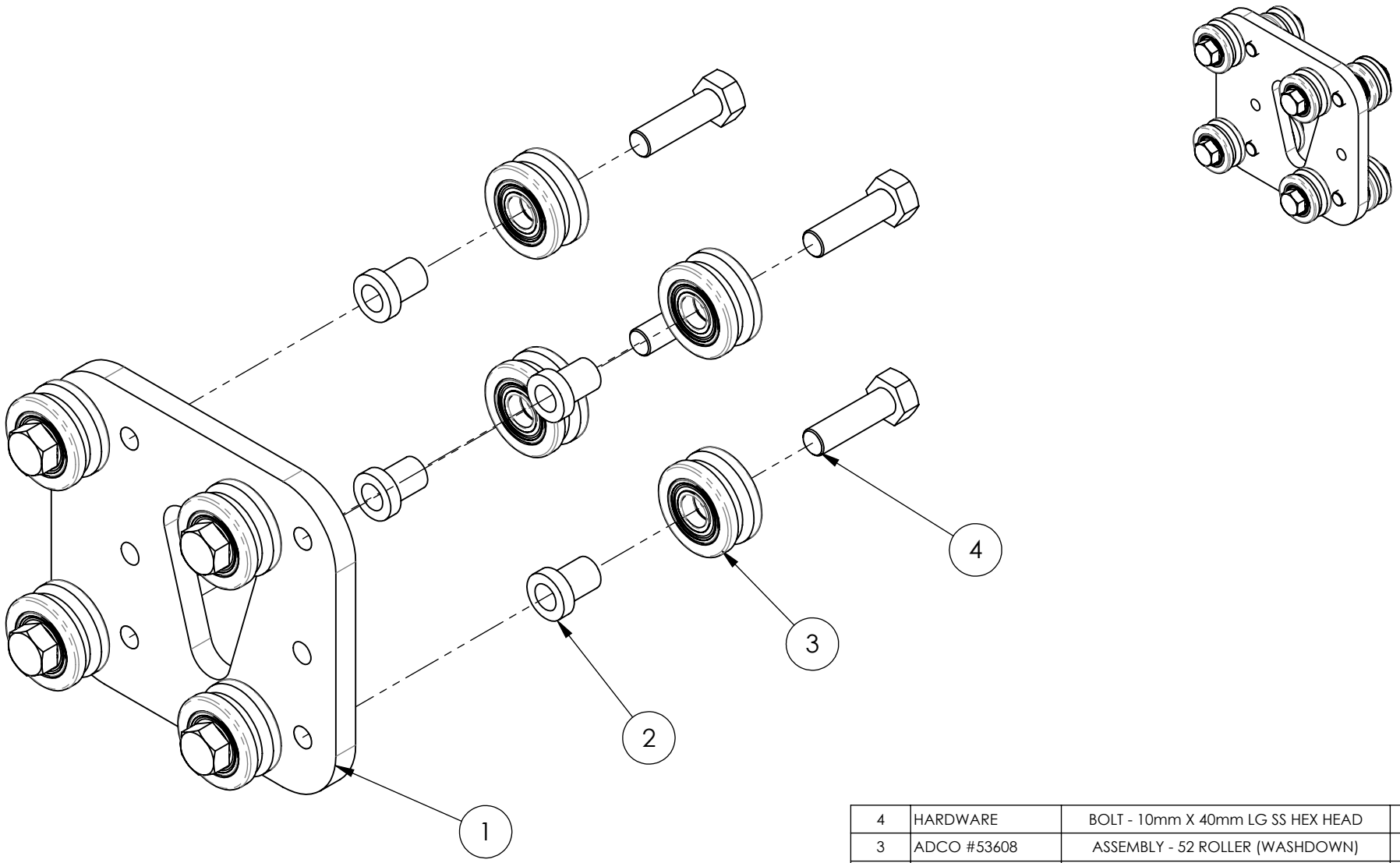

ITEM	PART NUMBER	DESCRIPTION	QTY
4	HARDWARE	BOLT - 10mm X 40mm LG SS HEX HEAD	8
3	ADCO #53608	ASSEMBLY - 52 ROLLER (WASHDOWN)	8
2	100-38-102	SPINDLE - SIZE 52 ROLLER	8
1	830-04-100	PLATE - INA BEARING MOUNT	1

08/13

ASSEMBLY - INA ROLLER CARRIAGE PLATE

ADCO where products meet packaging
2170 ACADEMY AVE
SANGER, CA 93657
INFO@ADCOMFG.COM
559.875.5563

DRAWN BY: CR | DATE: 07/17/14 | SCALE: 1:2

REFERENCE: - | DRAWING NUMBER: **830-04-006** | SHEET 1/1 | SIZE A

THE INFORMATION CONTAINED IN THIS DRAWING IS THE SOLE PROPERTY OF ADCO MANUFACTURING. ANY REPRODUCTION IN PART OR WHOLE WITHOUT WRITTEN PERMISSION OF ADCO MFG IS PROHIBITED.

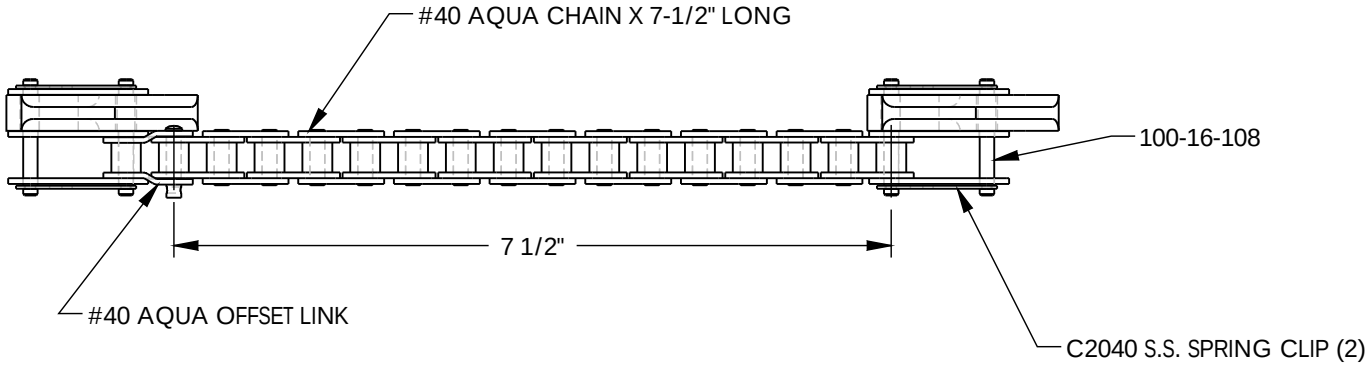

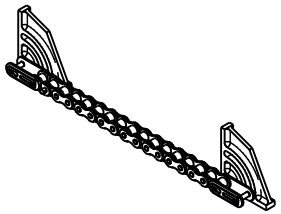

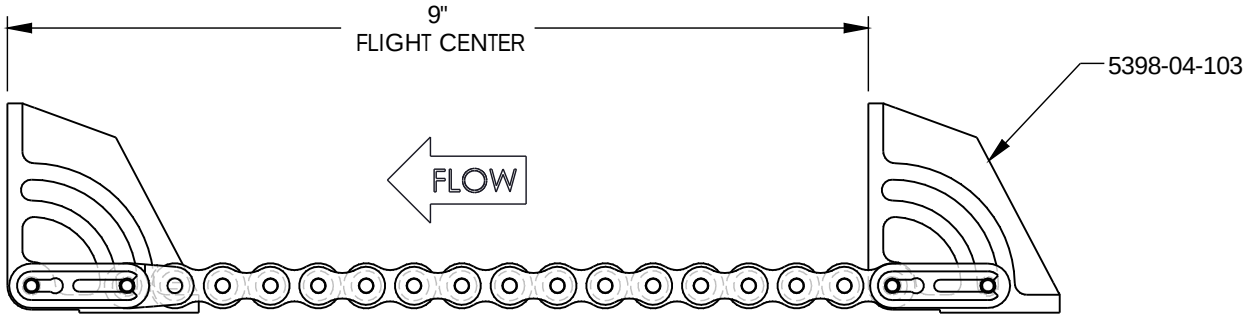

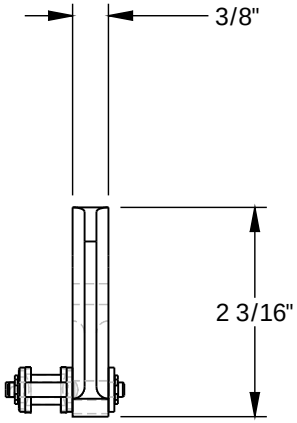

1 FLIGHT SHOWN - 11 FLIGHTS NEEDED
11 FLIGHTS @ 9" = 99" LONG CHAIN

MFG NOTE: BREAK ALL SHARP CORNERS & EDGES

THE INFORMATION CONTAINED IN THIS DRAWING IS THE SOLE PROPERTY OF ADCO MANUFACTURING. ANY REPRODUCTION IN PART OR WHOLE WITHOUT THE WRITTEN PERMISSION OF ADCO MANUFACTURING IS PROHIBITED.

10/11

MATERIAL: SEE NOTES	TOLERANCES: 1/16" ± 1/64" .00 ± .01 .000 ± .005 .0000 ± .0005 1° ± 10'	OPPOSITE -3	
		SHOWN -2	
DESCRIPTION: ASSEMBLY - TRANSFER CHAIN, HARKESS 9"		**MAKE AS:**	**QTY**

ADCO
2170 ACADEMY AVE
SANGER, CA 93657
INFO@ADCOMFG.COM
559.875.5563

DRAWN BY: N.S.	DATE: 11-29-12	SCALE: 1:2	
REFERENCE: 5398-04-100	**DRAWING NUMBER: 5426-04-101**	SHEET 1/1	SIZE A

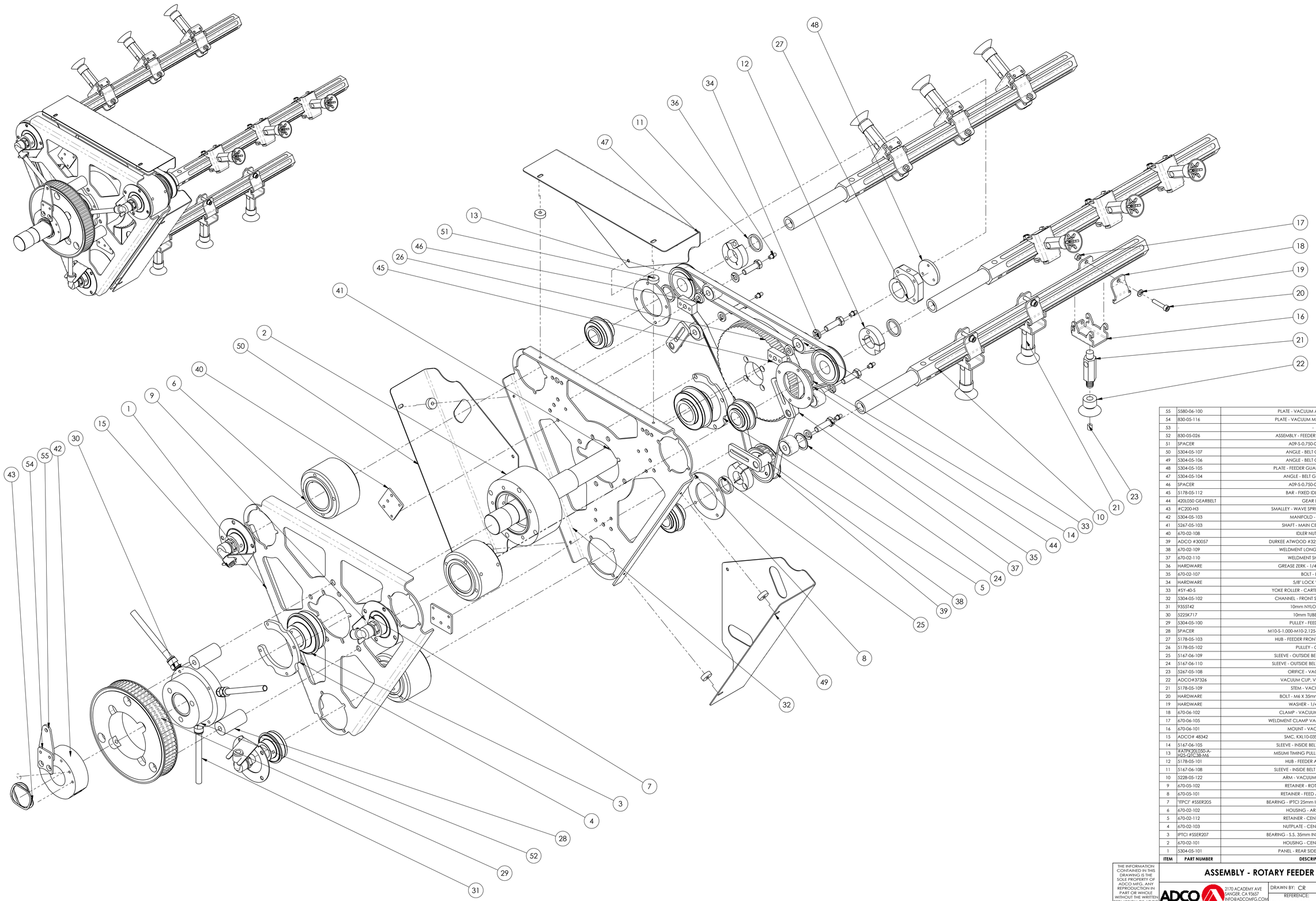

ITEM	PART NUMBER	DESCRIPTION	QTY
55	5580-06-100	PLATE - VACUUM ADJUST MOUNT	1
54	830-05-116	PLATE - VACUUM MANIFOLD ADJUST	1
53	-	-	1
52	830-05-026	ASSEMBLY - FEEDER PULLEY HUB 3HD	1
51	SPACER	A09-S-0.750-0.218-0.250	6
50	5304-05-107	ANGLE - BELT GUARD 3HD	1
49	5304-05-106	ANGLE - BELT GUARD 3HD	1
48	5304-05-105	PLATE - FEEDER GUARD NUTPLATE 3HD	1
47	5304-05-104	ANGLE - BELT GUARD 3HD 8"	1
46	SPACER	A09-S-0.750-0.406-0.157	2
45	5178-05-112	BAR - FIXED IDLER MOUNT	2
44	420L050 GEARBELT	GEAR BELT	420
43	#C200-H3	SMALLEY - WAVE SPRING ADCO# 46419	1
42	5304-05-103	MANIFOLD - VACUUM	1
41	5267-05-103	SHAFT - MAIN CENTER MOUNT	1
40	670-02-108	IDLER NUT PLATE	3
39	ADCO #30057	DURKEE ATWOOD #322L050 GEARBELT 86T	1
38	670-02-109	WELDMENT LONG IDLER TAKE UP	1
37	670-02-110	WELDMENT SHORT IDLER	2
36	HARDWARE	GREASE ZERK - 1/4" UNF STRAIGHT	5
35	670-02-107	BOLT - LUBE	5
34	HARDWARE	5/8" LOCK WASHER	5
33	#SY-40-S	YOKE ROLLER - CARTER - ADCO# 41855	5
32	5304-05-102	CHANNEL - FRONT SIDE PLATE 3HD 8"	1
31	9355T42	10mm NYLON TUBING	3
30	5225K717	10mm TUBE FITTING	3
29	5304-05-100	PULLEY - FEEDER DRIVE	1
28	SPACER	M10-S-1.000-M10-2.125-M10 (DRIVE PULLEY)	3
27	5178-05-103	HUB - FEEDER FRONT PULLEY MOUNT	1
26	5178-05-102	PULLEY - CENTER	1
25	5167-06-109	SLEEVE - OUTSIDE BELT INSIDE SPACER	1
24	5167-06-110	SLEEVE - OUTSIDE BELT OUTSIDE SPACER	1
23	5267-05-108	ORIFICE - VACUUM CUP	9
22	ADCO#37326	VACUUM CUP, VICAS VC49A-1	9
21	5178-05-109	STEM - VACUUM CUP	9
20	HARDWARE	BOLT - M6 X 35mm LG SS SKT HD	9
19	HARDWARE	WASHER - 1/4" SS LOCK	9
18	670-06-102	CLAMP - VACUUM STEM MOUNT	9
17	670-06-105	WELDMENT CLAMP VACUUM STEM MOUNT	9
16	670-06-101	MOUNT - VACUUM STEM	9
15	ADCO# 48342	SMC, XXL10-03S, 90 FITTING	3
14	5167-06-105	SLEEVE - INSIDE BELT INSIDE SPACER	2
13	#ATPK20L050-A-H25-Q1C38-M6	MISUMI TIMING PULLEY, ADCO#51197	3
12	5178-05-101	HUB - FEEDER ARM ADJUST	3
11	5167-06-108	SLEEVE - INSIDE BELT OUTSIDE SPACER	2
10	5228-05-122	ARM - VACUUM CUP MOUNT	3
9	670-05-102	RETAINER - ROTARY FITTING	3
8	670-05-101	RETAINER - FEED ARM BEARING	3
7	TTPCT #SSER205	BEARING - IPTCI 25mm INSERT ADCO #46634	6
6	670-02-102	HOUSING - ARM BEARING	3
5	670-02-112	RETAINER - CENTER BEARING	1
4	670-02-103	NUTPLATE - CENTER BEARING	1
3	IPTCI #SSER207	BEARING - S.S. 35mm INSERT (ADCO #49283)	2
2	670-02-101	HOUSING - CENTER BEARING	1
1	5304-05-101	PANEL - REAR SIDE 3HD-8" FEEDER	1

THE INFORMATION CONTAINED IN THIS DRAWING IS THE SOLE PROPERTY OF ADCO MFG. ANY REPRODUCTION IN PART OR WHOLE WITHOUT THE WRITTEN PERMISSION OF ADCO MFG IS PROHIBITED.

ASSEMBLY - ROTARY FEEDER

ADCO
2170 ACADEMY AVE
SANGER, CA 93657
INFO@ADCOMFG.COM
559.875.5563

DRAWN BY: CR	DATE: 05/22/14	SCALE: 1:3
REFERENCE: 5304-05-001	DRAWING NUMBER: 5580-05-001	SHEET 1/1 SIZE D

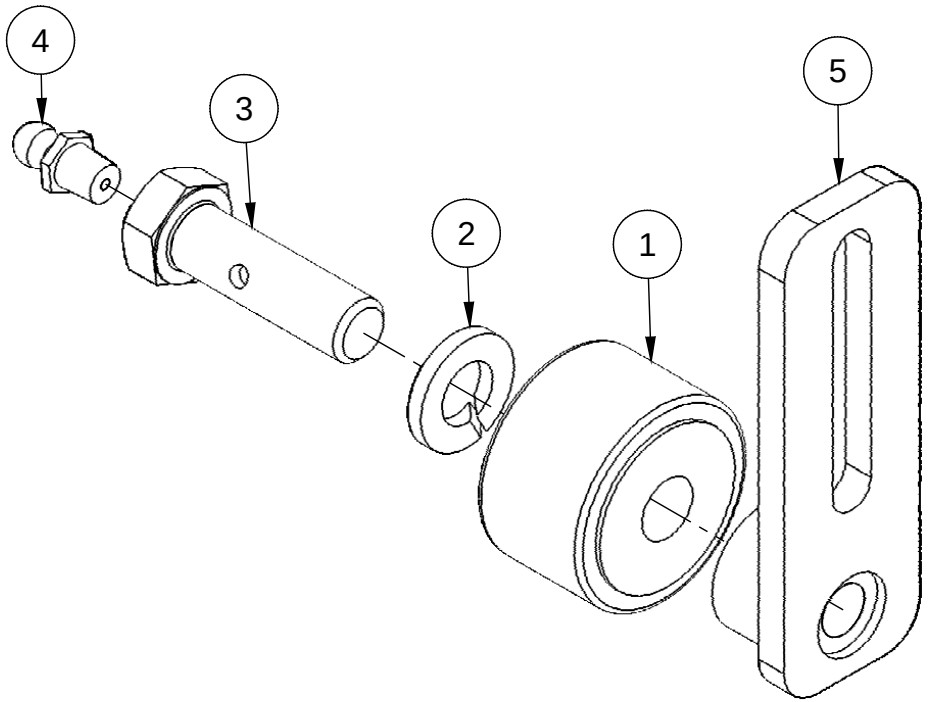

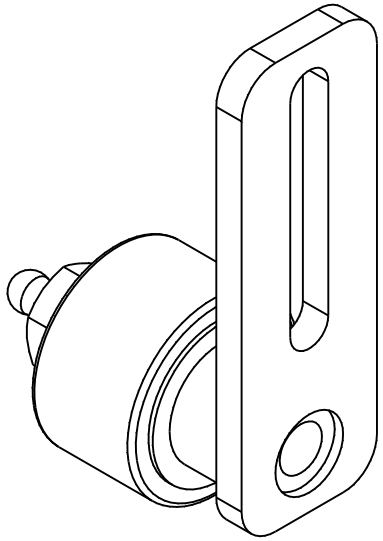

ITEM NO.	PART NUMBER	DESCRIPTION	QTY.
1	5178 - Carter SY-40-S	YOKE ROLLER - CARTER - ADCO# 41855	1
2	375	5/8" LOCK WASHER	1
3	670-02-107	BOLT - LUBE	1
4	830 - GREASE ZERK STRAIGHT	GREASE ZERK - 1/4" UNF STRAIGHT	1
5	670-02-110	WELDMENT SHORT IDLER	1

JOB LABEL

THE INFORMATION CONTAINED IN THIS DRAWING IS THE SOLE PROPERTY OF ADCO MFG. ANY REPRODUCTION IN PART OR WHOLE WITHOUT THE WRITTEN PERMISSION OF ADCO MFG IS PROHIBITED.

2/08

DESCRIPTION: **SHORT IDLER ASSEMBLY**

ADCO Manufacturing
2170 Academy Avenue
Sanger, CA 93657
Tel: 559.875.5563
Fax: 559.875.7665

DRAWN BY: RGV	DATE: 9/4/09	SCALE: 1:1	
REFERENCE:	**DRAWING NUMBER:** **670-02-002**	SHEET 1/1	SIZE A

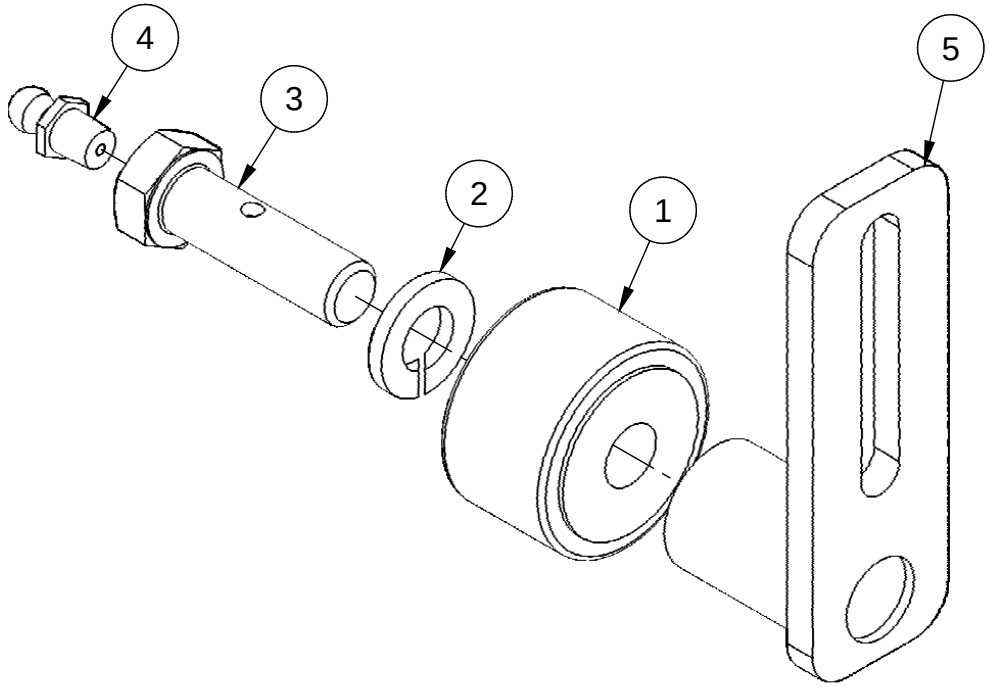

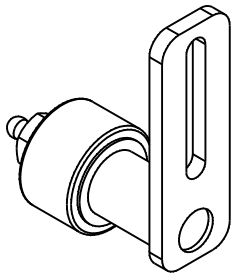

ITEM NO.	PART NUMBER	DESCRIPTION	QTY.
1	5178 - Carter SY-40-S	YOKE ROLLER - CARTER - ADCO# 41855	1
2	375	5/8" LOCK WASHER	1
3	670-02-107	BOLT - LUBE	1
4	830 - GREASE ZERK STRAIGHT	GREASE ZERK - 1/4" UNF STRAIGHT	1
5	670-02-109	WELDMENT LONG IDLER TAKE UP	1

JOB LABEL

THE INFORMATION CONTAINED IN THIS DRAWING IS THE SOLE PROPERTY OF ADCO MFG. ANY REPRODUCTION IN PART OR WHOLE WITHOUT THE WRITTEN PERMISSION OF ADCO MFG IS PROHIBITED.

2/08

DESCRIPTION: **LONG IDLER ASSEMBLY**

ADCO Manufacturing
2170 Academy Avenue
Sanger, CA 93657
Tel: 559.875.5563
Fax: 559.875.7665

DRAWN BY: RGV | DATE: 9/4/09 | SCALE: 1:1

REFERENCE:

DRAWING NUMBER: **670-02-003**

SHEET 1/1 | SIZE A

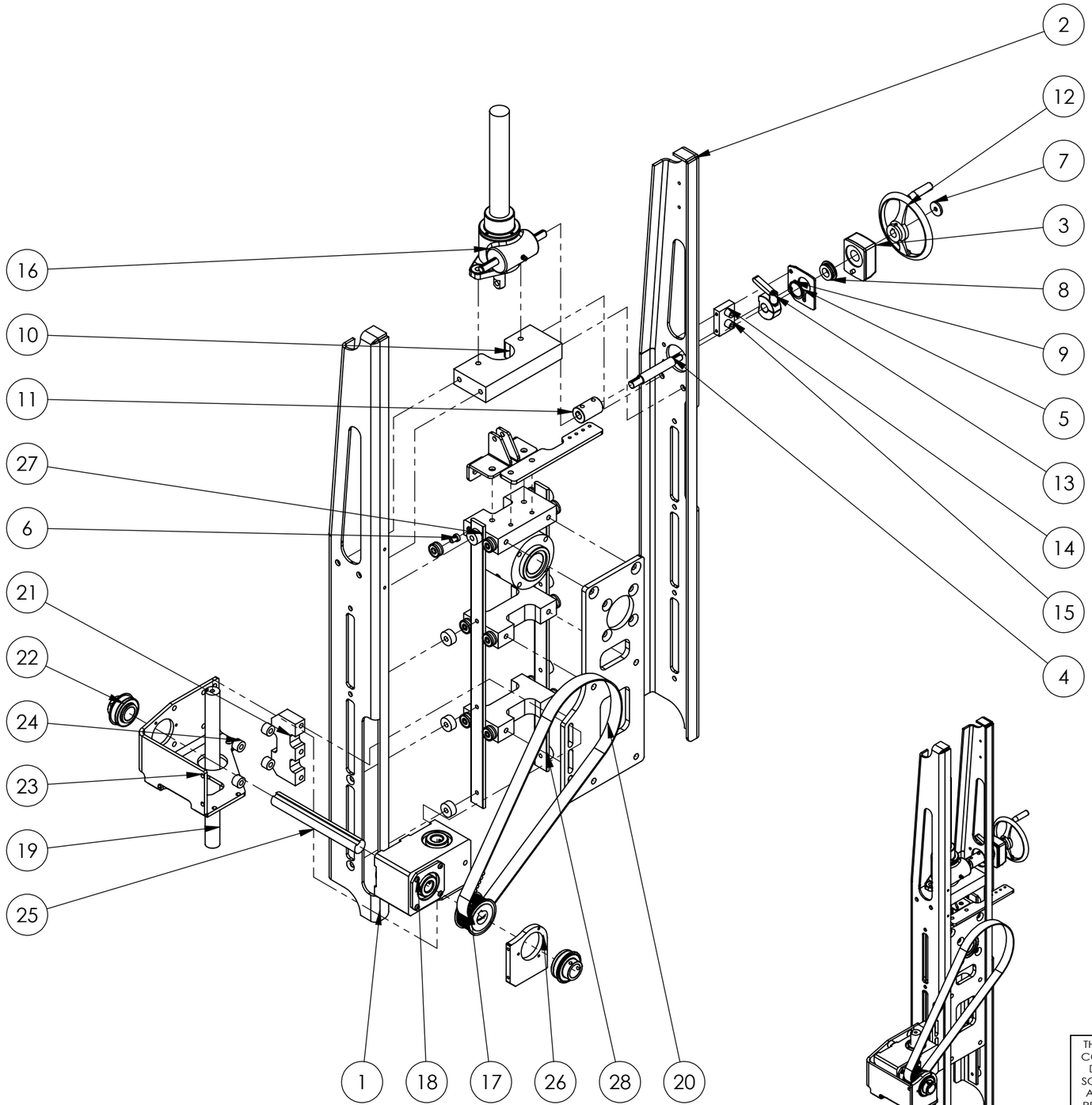

ITEM	PART NUMBER	DESCRIPTION	QTY
28	SPACER	A09-S-1.000-0.344-0.466	8
27	5579-06-100	TRACK, HOPPER SIDE GUIDE ADJ. (32)	2
26	830-06-119	BLOCK - BEARING MOUNT	1
25	830-06-118	SHAFT - HORIZ DRIVE	1
24	SPACER	A09-S-0.750-0.344-0.500	4
23	830-06-117-2	WELDMENT - GBOX MOUNT	1
22	#SSER205	BEARING - IPTCI 25mm INSERT	2
21	830-06-116	BAR - MECH DRIVE G-BOX MOUNT	1
20	HTBN 1080-S8M-250	GEARBELT - S8M HIGH TORQUE 135 TOOTH - 1080mm LG X 25mm WIDE	1
19	830-06-120	SHAFT - UPPER VERT. DRIVE	1
18	#4304-0987	WC BRANHAM, STD GB GLIDE RITE 1:1 RATIO (25MM TO 25MM BORE) RH DRIVE	1
17	HTPK24S8M250-A-N25	PULLEY - S8M HIGH TORQUE PITCH, 24 TOOTH, 25mm WIDE BELT, HARD ANNODIZE, 25mm BORE W/ KEYWAY & SETSCREW	1
16	WJ5114K-08.50-STDX-STDX	INCH MACHINE SCREW JACK, 1 TON SIZE, 5:1 RATIO, INVERTED, MALE CLEVIS, KEYED, 8 1/2" RISE, STANDARD S.S. SHAFTS,	1
15	SPACER	A09-S-0.500-0.218-0.449	2
14	830-06-106	BAR - CLAMP & SIKO PLATE MOUNT	1
13	SSCDKL16-M	SHAFT COLLAR, D SIDE MOUNT 16mm	1
12	ADCO #	MISUMI, HANDLE - #SHLN125-KC14	1
11	830-06-101	COUPLING - FEEDER ADJUST	1
10	830-06-100	BAR - ADJ GEARBOX MOUNT	1
9	#91590A135	"McMASTER CARR" RETAINING RING - Ø1 1/8"	1
8	830-06-104	BUSHING - FEEDER VERT ADJ. SHAFT	1
7	HARDWARE	1/4" S.S. HEAVY DUTY FLAT WASHER	1
6	5624-06-002	ASSEMBLY - FEEDER MOUNT	1
5	830-06-105	PLATE - SIKO BACKPLATE	1
4	830-06-102	SHAFT - VERT. ADJUST	1
3	ADCO #	DIGITAL COUNTER - SIKO (DA09S-07-4-0-I-VA16-O-A-K-AD-OZP-BP-ORP)	1
2	830-01-113C	PANEL - UPSTREAM FEEDER MOUNT	1
1	830-01-112C	PANEL - DOWNSTREAM FEEDER MOUNT	1

THE INFORMATION CONTAINED IN THIS DRAWING IS THE SOLE PROPERTY OF ADCO MFG. ANY REPRODUCTION IN PART OR WHOLE WITHOUT THE WRITTEN PERMISSION OF ADCO MFG IS PROHIBITED.

ASSEMBLY - FEEDER MOUNT

ADCO
2170 ACADEMY AVE
SANGER, CA 93657
INFO@ADCOMFG.COM
559.875.5563

DRAWN BY: JJR | DATE: 02-16-15 | SCALE: 1:8

REFERENCE: 5267-06-001 | DRAWING NUMBER: **5624-06-001** | SHEET 1/1 | SIZE B

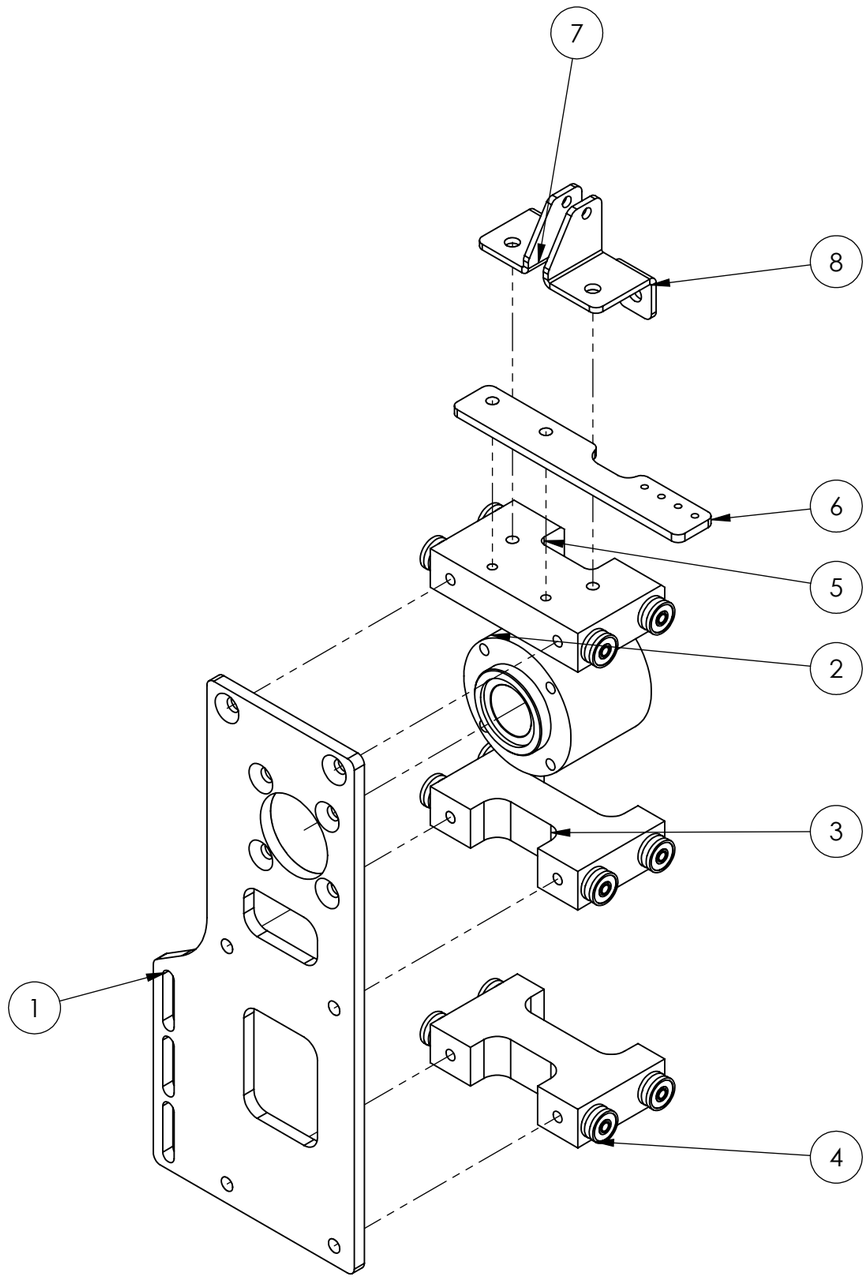

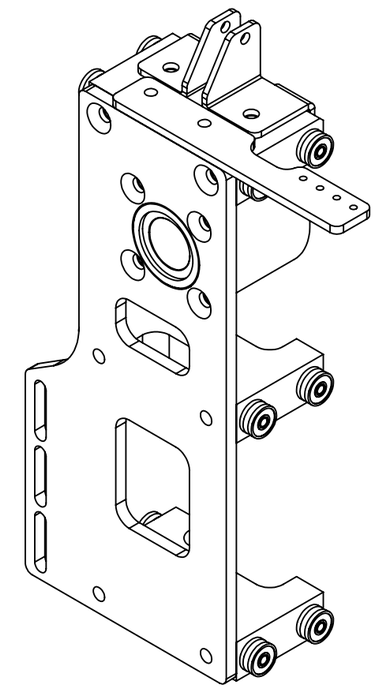

ITEM	PART NUMBER	DESCRIPTION	QTY
8	830-06-113-2	ANGLE - UPPER FEEDER MOUNT	1
7	830-06-113-3	ANGLE - UPPER FEEDER MOUNT	1
6	830-06-112	PLATE - VACUUM ADJUST CYLINDER MOUNT	1
5	830-06-110	BLOCK - TOP INA BEARING / BACKPLATE MOUNT	1
4	100-38-002	ASSEMBLY - SIZE 32 WASHDOWN INA ROLLER	12
3	830-06-109	BLOCK - INA BEARING / BACKPLATE MOUNT	2
2	830-06-108	MOUNT - FEEDER CENTER SHAFT	1
1	830-06-107	PLATE - FEEDER MOUNT MAIN	1

THE INFORMATION CONTAINED IN THIS DRAWING IS THE SOLE PROPERTY OF ADCO MFG. ANY REPRODUCTION IN PART OR WHOLE WITHOUT THE WRITTEN PERMISSION OF ADCO MFG IS PROHIBITED.

ASSEMBLY - FEEDER MOUNT

ADCO
2170 ACADEMY AVE
SANGER, CA 93657
INFO@ADCOMFG.COM
559.875.5563

DRAWN BY: JJR
DATE: 02-16-15
SCALE: 1:4
REFERENCE: -
DRAWING NUMBER: 5624-06-002
SHEET 1/1
SIZE B

BREAK ALL SHARP CORNERS & EDGES	DRAWING NUMBER: 100-38-002
NEXT ASSEMBLY:	

SIZE 32 WASHDOWN INA ROLLER ASSEMBLY

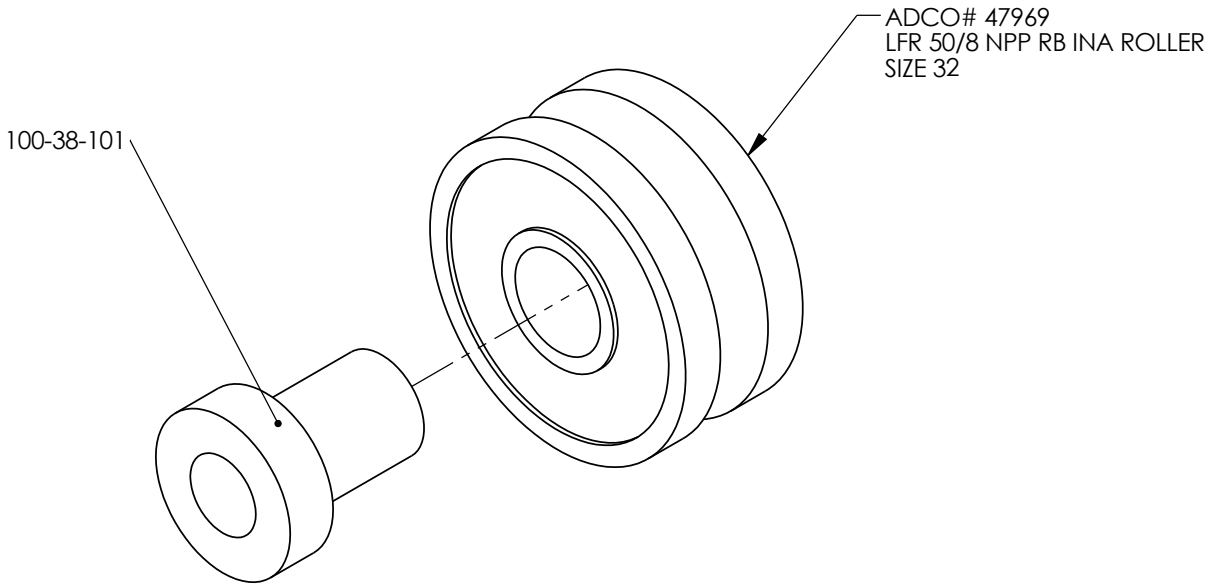

DATE	SYM	REVISION DESCRIPTION	BY	AUTH

THE INFORMATION CONTAINED IN THIS DRAWING IS THE SOLE PROPERTY OF ADCO MANUFACTURING. ANY REPRODUCTION IN PART OR WHOLE WITHOUT THE WRITTEN PERMISSION OF ADCO MANUFACTURING IS PROHIBITED.

FINISH CODE
0 = NONE
1 = POWDER COAT
2 = ZINC PLATE
3 = NICKEL PLATE
4 = CHROME PLATE
5 = HARD ANODIZE
6 = BLACK ANODIZE
7 = CLEAR ANODIZE
8 = OTHER

HAND
AS SHOWN - 02
OPPOSITE - 03

TOLERANCE:
DIMENSIONS IN INCHES
1/16 ± 1/64
.00 ± .01
.000 ± .005
.0000 ± .0005
1° ± 10'

MATERIAL: SEE NOTES

FINISH: -03, -02

TITLE: ASSEMBLY - SIZE 32 WASHDOWN INA ROLLER

HAND | QTY

ADCO Manufacturing
2170 Academy Avenue
Sanger, CA 93657
Tel: 559.875.5563
Fax: 559.875.7665

BY: CAW | DATE: 09-05-08 | SCALE: 2:1

REFERENCE: - | DRAWING NUMBER: 100-38-002 | SHEET 1/1 | SIZE A

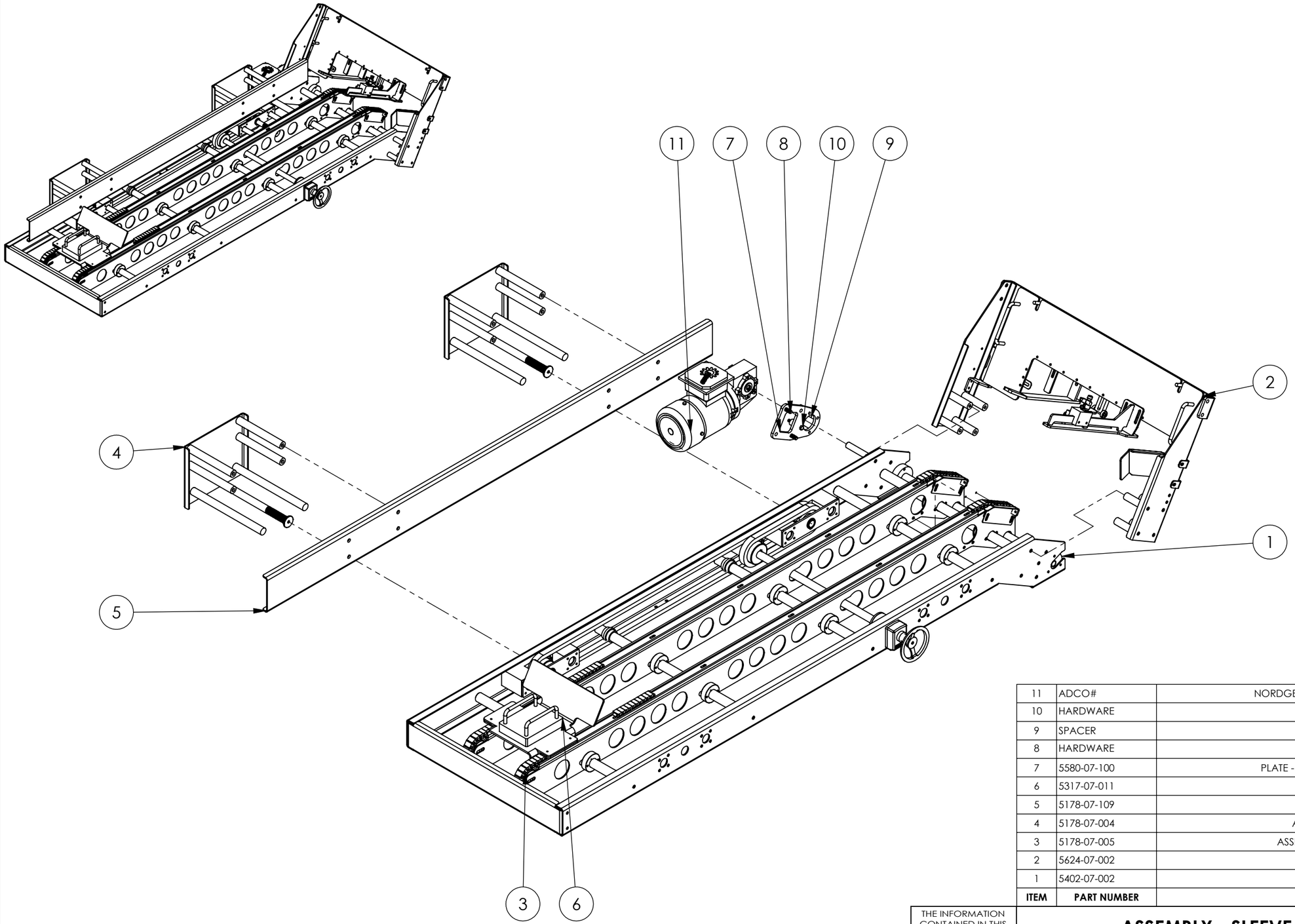

ITEM	PART NUMBER	DESCRIPTION	QTY
11	ADCO#	NORDGEAR, GEARMOTOR - #SK1SMID31AZ-63L	1
10	HARDWARE	M6 , Hex Head Cap Screw	1
9	SPACER	A09-S-0.625-0.265-1.125	4
8	HARDWARE	M8 Hex Head Cap Screw	2
7	5580-07-100	PLATE - HOPPER DRIVE GEARMOTOR MOUNT	1
6	5317-07-011	ASSEMBLY, HOPPER BLOCK	1
5	5178-07-109	CHANNEL - SIDE GUIDE	1
4	5178-07-004	ASSEMBLY - GUIDE RAIL MOUNT	2
3	5178-07-005	ASSEMBLY - MAGAZINE STRONGBACK	2
2	5624-07-002	ASSEMBLY - MAGAZINE GATE	1
1	5402-07-002	ASSEMBLY - MAGAZINE BASE	1

THE INFORMATION CONTAINED IN THIS DRAWING IS THE SOLE PROPERTY OF ADCO MFG. ANY REPRODUCTION IN PART OR WHOLE WITHOUT THE WRITTEN PERMISSION OF ADCO MFG IS PROHIBITED.

16/11

ASSEMBLY - SLEEVE MAGAZINE

ADCO
2170 ACADEMY AVE
SANGER, CA 93657
INFO@ADCOMFG.COM
559.875.5563

DRAWN BY: JJR
DATE: 02-16-15
SCALE: 1:10
REFERENCE: 5580-07-001
DRAWING NUMBER: **5624-07-001**
SHEET 1/1
SIZE B

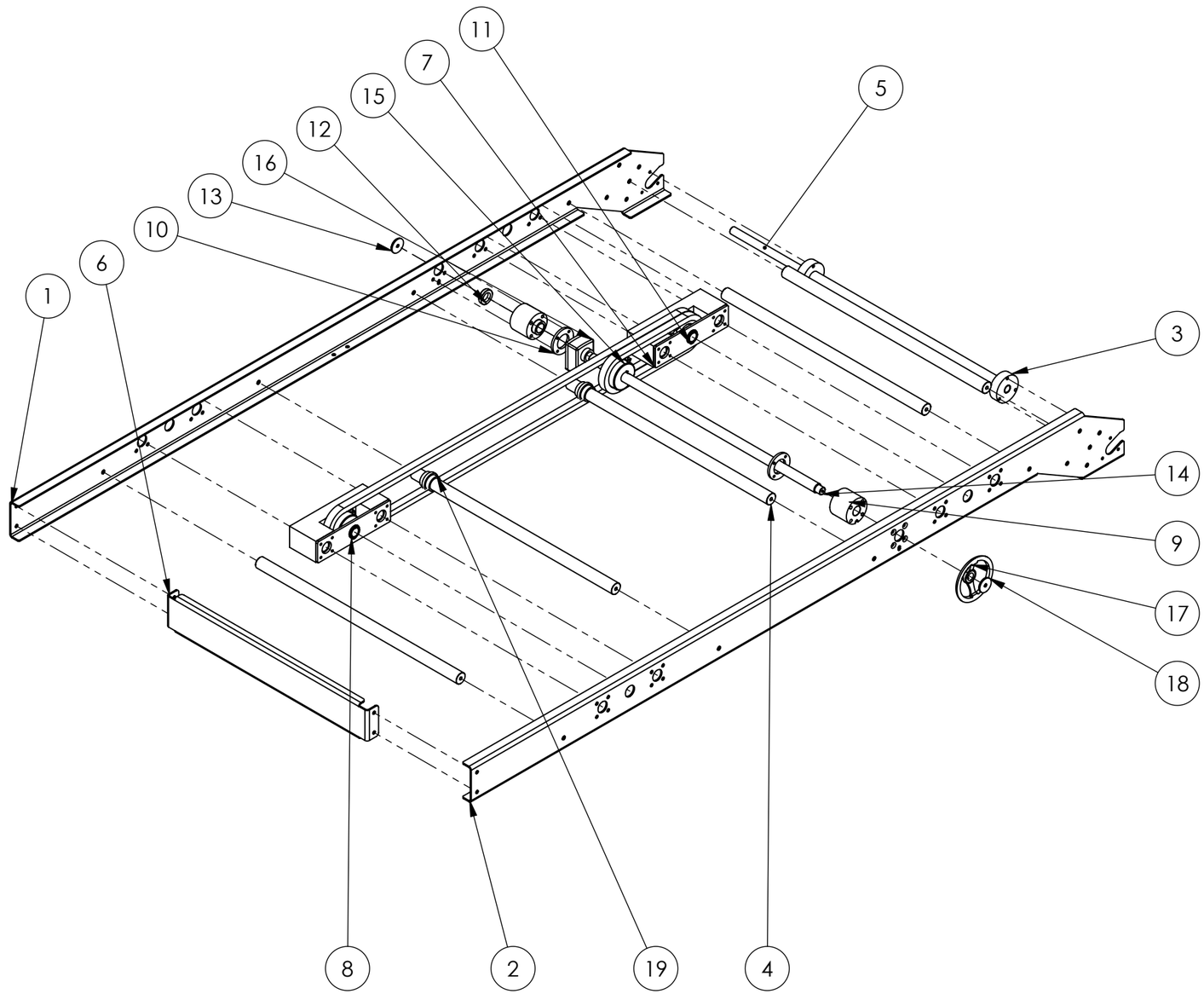

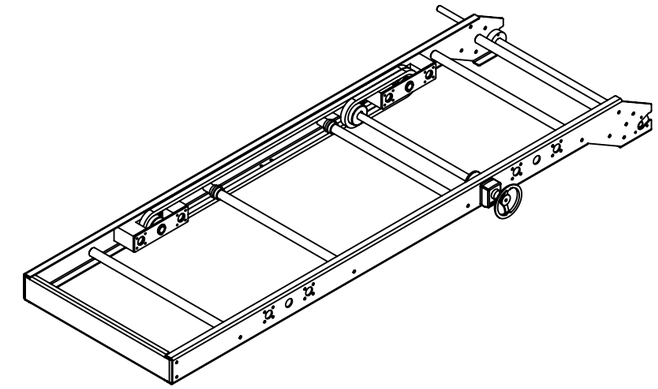

ITEM	PART NUMBER	DESCRIPTION	QTY
19	5178-07-113	GUIDE - ADJUSTMENT CHAIN	2
18	SPACER	A09-S-1.250-0.281-0.125	1
17	#SHLN100-HC16	HANDWHEEL - MISUMI - ADCO #51196	1
16	#DA09S-07-2-0-E-VA20-O-A-K-AD-OZP-BP-ORP	SIKO - DIGITAL COUNTER	1
15	SPROCKET	M01-S-401-18-20	1
14	5304-07-100	SHAFT - SIDE GUIDE ADJUST	1
13	5172-08-129	CAP - SHAFT	1
12	SPACER	A09-D-1.250-0.790-0.250	1
11	#91590A133	RETAINING RING - McMASTER CARR - ADCO #43260	2
10	5172-08-122	NUTPLATE - HOPPER GUIDE BUSHING	2
9	5172-08-121	GUIDE BUSHING - HOPPER SIDE GUIDE ADJUST	2
8	5178-07-007	ASSEMBLY - SINGLE SPROCKET HOPPER ADJ.	1
7	5178-07-006	ASSEMBLY - DOUBLE SPROCK HOPPER ADJ.	1
6	5304-07-102	CHANNEL - HOPPER ENDCAP	1
5	5402-07-102	SHAFT - HOPPER DRIVE	1
4	SHAFT	M17-25-20.000-M8	5
3	5402-07-103	BUSHING - HOPPER DRIVE SHAFT	2
2	5172-08-107-3	PANEL - HOPPER SIDE	1
1	5178-07-101-2	PANEL - HOPPER SIDE	1

THE INFORMATION CONTAINED IN THIS DRAWING IS THE SOLE PROPERTY OF ADCO MFG. ANY REPRODUCTION IN PART OR WHOLE WITHOUT THE WRITTEN PERMISSION OF ADCO MFG IS PROHIBITED.

10/11

ASSEMBLY - MAGAZINE BASE

ADCO
2170 ACADEMY AVE
SANGER, CA 93657
INFO@ADCOMFG.COM
559.875.5563

DRAWN BY: JJR | DATE: 11/7/12 | SCALE: 1:10

REFERENCE: 5304-07-002 | DRAWING NUMBER: **5402-07-002** | SHEET 1/1 | SIZE B

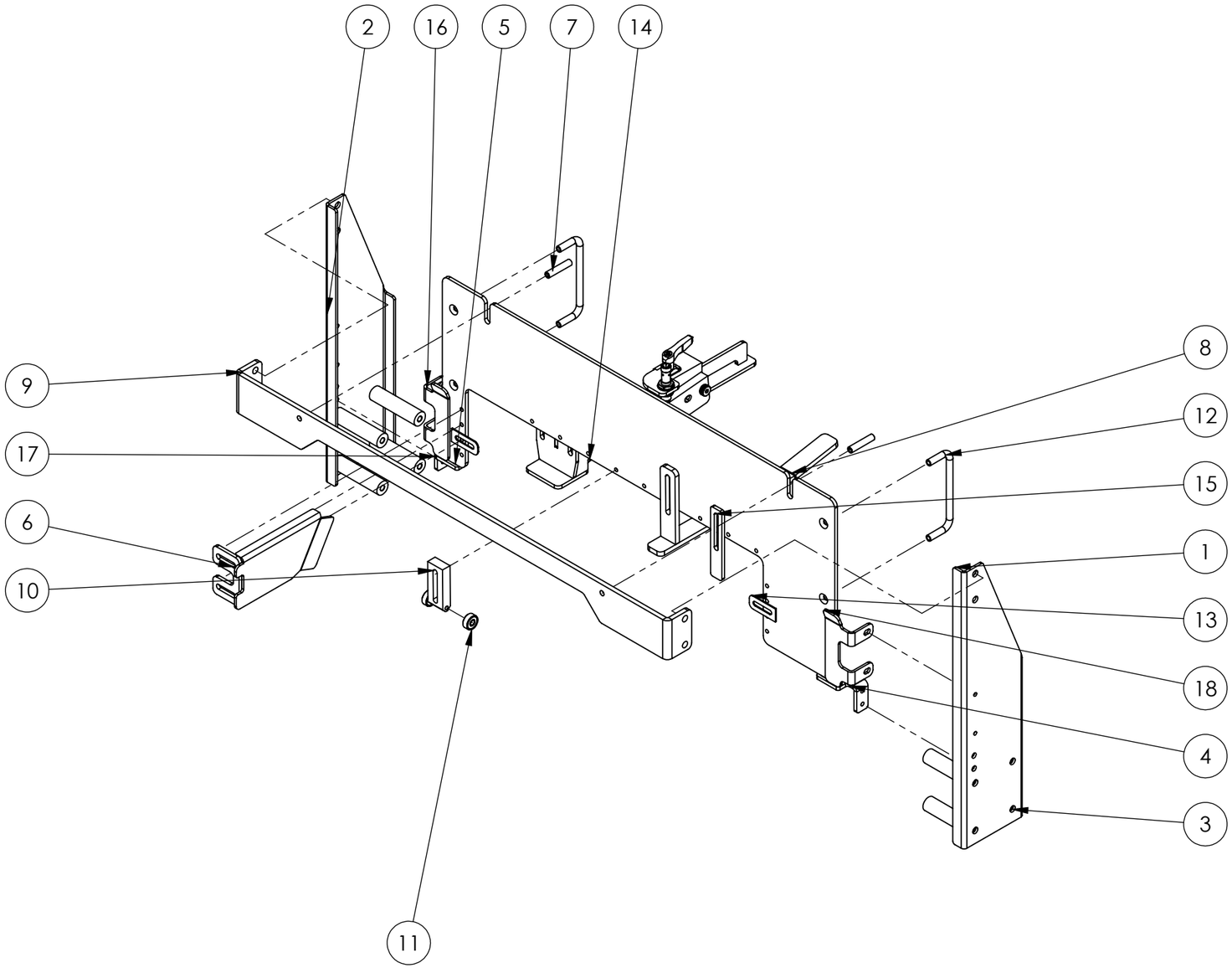

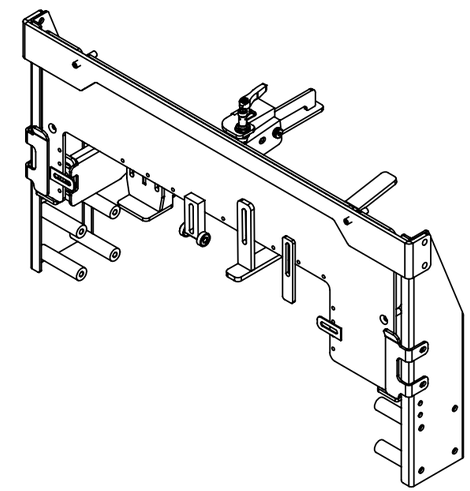

ITEM	PART NUMBER	DESCRIPTION	QTY
18	5624-07-100	ANGLE - FACEPLATE GUIDE	1
17	5060-09-118-3	MOUNT - HOPPER PLATE LOWER MOUNT	1
16	5624-07-100	ANGLE - FACEPLATE GUIDE	1
15	5167-08-123	PLATE - HOPPER TABBING TOP	1
14	5549-08-007	ASSEMBLY - HOPPER ADVANCE SENSOR MOUNT	1
13	41-42	HOPPER BLADE	2
12	#HA11387	S.S. "SPD" HANLE - HA11387 (ADCO #42633)	2
11	#SSR-4A2RS	BEARING - (Ø1/4") ADCO #38297	2
10	5304-07-110	ROLLER EDGE - CARTON HOPPER	1
9	5304-07-103	MOUNT - HOPPER GATE TOP	1
8	5287-08-117	WELDMENT - O.H. SHOE @ HOPPER	1
7	HARDWARE	ALLTHREAD - M8 SS	2
6	5624-07-103-2	WELDMENT - GATE GUIDE	1
5	5402-07-104	PLATE - HOPPER PICK GATE	1
4	5060-09-118	MOUNT - HOPPER PLATE LOWER MOUNT	1
3	SPACER	M10-S-0.750-M8-3.000-M8	8
2	5178-07-105-3	UPRIGHT - HOPPER GATE	1
1	5624-07-102-2	CHANNEL - GATE UPRIGHT	1

THE INFORMATION CONTAINED IN THIS DRAWING IS THE SOLE PROPERTY OF ADCO MFG. ANY REPRODUCTION IN PART OR WHOLE WITHOUT THE WRITTEN PERMISSION OF ADCO MFG IS PROHIBITED.

10/11

ASSEMBLY - MAGAZINE GATE

ADCO
2170 ACADEMY AVE
SANGER, CA 93657
INFO@ADCOMFG.COM
559.875.5563

DRAWN BY: JJR | DATE: 02-16-15 | SCALE: 1:6

REFERENCE:

DRAWING NUMBER: **5624-07-002** | SHEET 1/1 | SIZE B

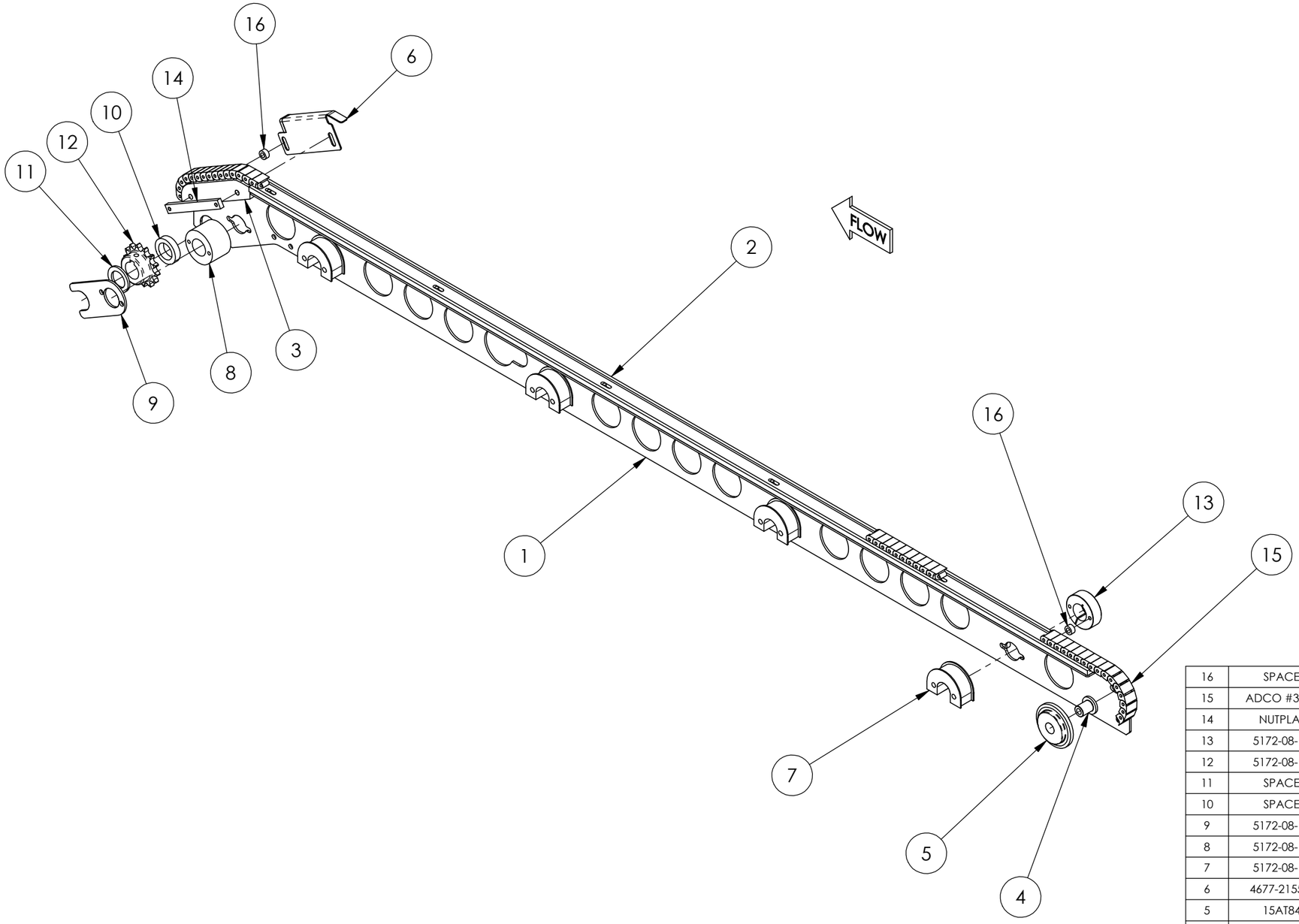

ITEM #	PART #	DESCRIPTION	QTY
16	SPACER	A09-S-0.500-0.281-0.250	10
15	ADCO #38161	LINK	AR
14	NUTPLATE	M24-S-4.000-4.500-0.500-0.250-M6	1
13	5172-08-125	COLLAR - RUNNER PANEL MOUNT	4
12	5172-08-117	SPROCKET - SLIDING	1
11	SPACER	A09-D-1 1/2"-63/64"-1/8"	1
10	SPACER	A09-D-1 1/2"-63/64"-23/64"	1
9	5172-08-119	PLATE - SLIDING SPROCKET CAPTURE	1
8	5172-08-112	GUIDE - HOPPER CHAIN ADJUST	1
7	5172-08-120	GUIDE - HOPPER CHAIN	4
6	4677-2155-02	WELDMENT - CARTON RUNNER	1
5	15AT846	#40-18 TOOTHLESS IDLER	1
4	4677-2154	AXLE - HOPPER CHAIN IDLER	1
3	4677-2152	RAIL - HOPPER CHAIN NOSE	1
2	5178-07-103	RUNNER - HOPPER	1
1	5178-07-115	WELDMENT - HOPPER STRONGBACK	1

JOB LABEL

THE INFORMATION CONTAINED IN THIS DRAWING IS THE SOLE PROPERTY OF ADCO MFG. ANY REPRODUCTION IN PART OR WHOLE WITHOUT THE WRITTEN PERMISSION OF ADCO MFG IS PROHIBITED.

2/08

DESCRIPTION: **ASSEMBLY - MAGAZINE STRONGBACK**

ADCO Manufacturing
2170 Academy Avenue
Sanger, CA 93657
Tel: 559.875.5563
Fax: 559.875.7665

DRAWN BY: JJV	DATE: 8/17/10	SCALE: 1:4	
REFERENCE: -	DRAWING NUMBER: **5178-07-005**	SHEET 1/1	SIZE B

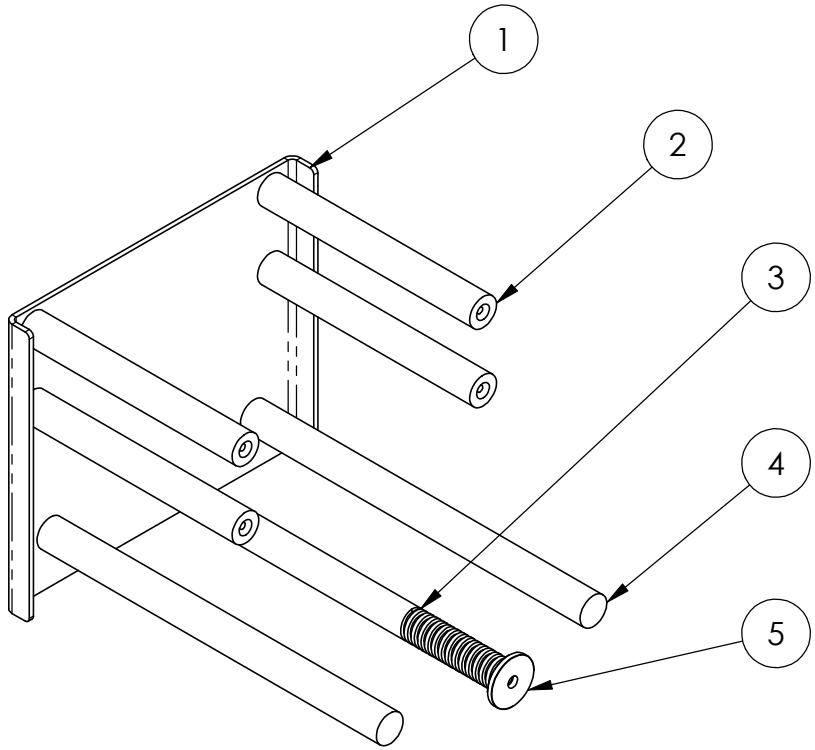

ITEM #	PART #	DESCRIPTION	QTY
5	SPACER	A09-S-1.250-0.266-0.125	1
4	SHAFT	M16-20-10.000-M8	2
3	5060-09-108	SHAFT - HOPPER SIDE ADJUST R/H	1
2	5172-08-100	SPACER - SIDE GUIDE MOUNT LONG	4
1	5060-09-106	CHANNEL - HOPPER SIDE GUIDE MOUNT DOUBLE	1

JOB LABEL

THE INFORMATION CONTAINED IN THIS DRAWING IS THE SOLE PROPERTY OF ADCO MFG. ANY REPRODUCTION IN PART OR WHOLE WITHOUT THE WRITTEN PERMISSION OF ADCO MFG IS PROHIBITED.

2/08

DESCRIPTION: **ASSEMBLY - GUIDE RAIL MOUNT**

ADCO Manufacturing
2170 Academy Avenue
Sanger, CA 93657
Tel: 559.875.5563
Fax: 559.875.7665

DRAWN BY: JJR | DATE: 8/18/10 | SCALE: 1:4

REFERENCE: 5060-09-005 | **DRAWING NUMBER:** **5178-07-004** | SHEET 1/1 | SIZE A

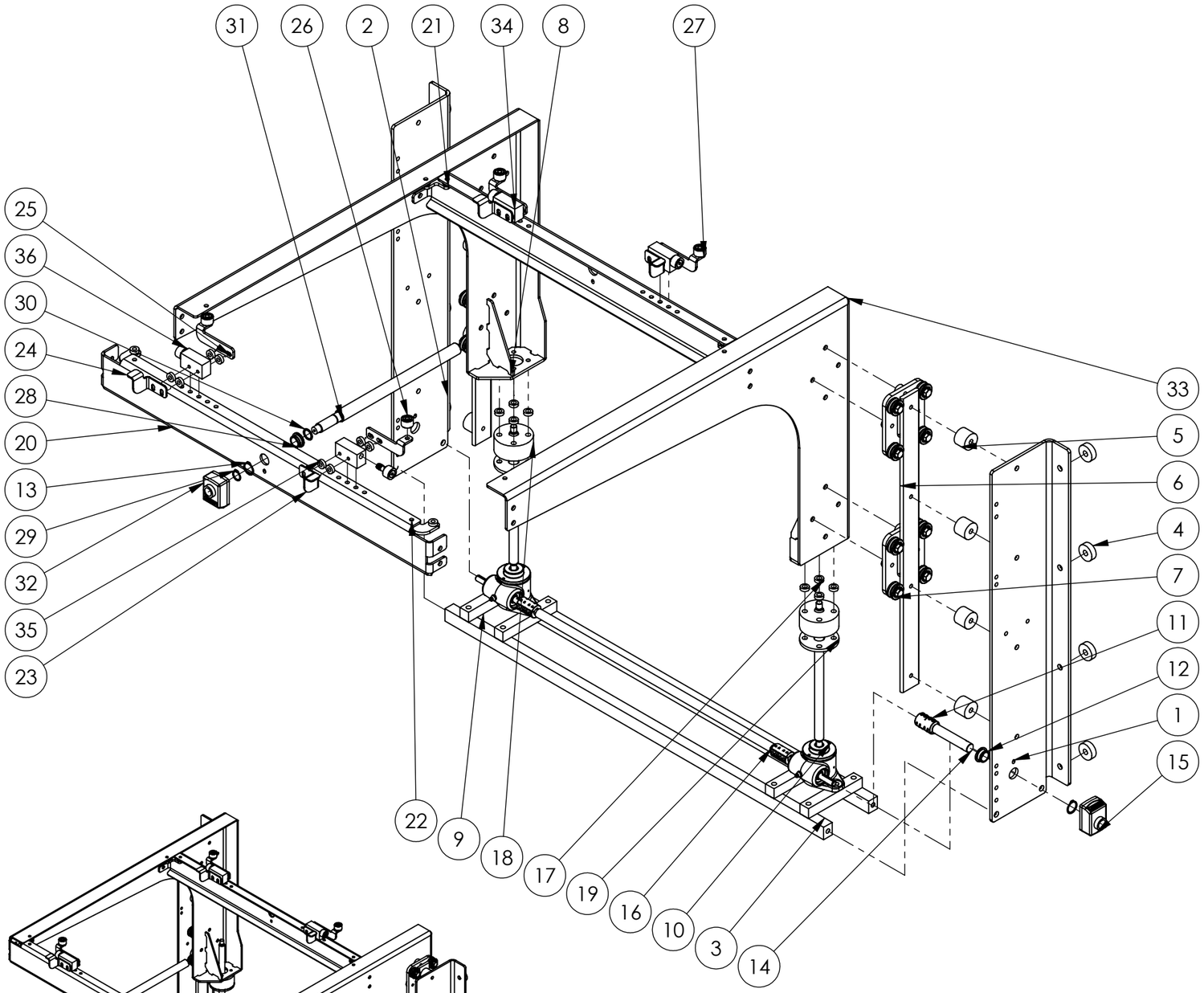

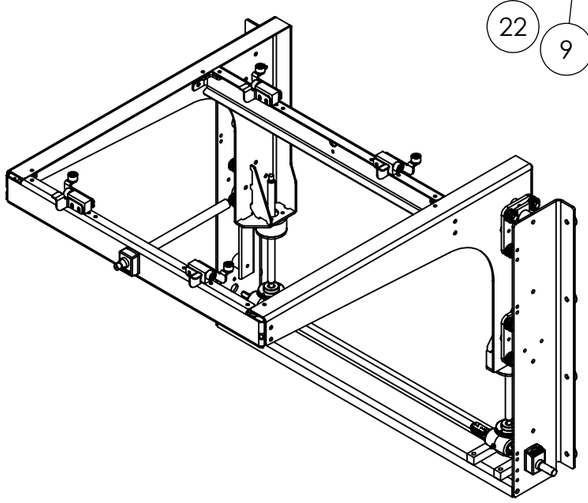

ITEM	PART NUMBER	DESCRIPTION	QTY
36	#SC-32-SB	CAM FOLLOWER - Ø1" ROLLER 7/16" SHOULDER - SS	4
35	SPACER	A09-S-0.750-0.344-0.250	16
34	5178-08-115	BLOCK - HOPPER ROLLER SUPPORT	4
33	5178-08-108-3	WELDMENT - HOPPER MOUNT	1
32	#DA09S-07-2-0-E-VA20-O-A-K-AD-OZP-BP-ORP	SIKO - DIGITAL COUNTER	1
31	5178-08-118	SCREW SHAFT - HORIZONTAL ADJUST	1
30	SPACER	A09-S-1.000-0.790-0.060	1
29	ADCO #45252	RETAINING RING - McMASTER CARR #90967A235	1
28	5178-04-143	BUSHING - HORIZONTAL ADJUST SHAFT	1
27	5624-08-109-2	MOUNT - CAM ROLLER	2
26	#SY-32-SB	YOKE ROLLER - CARTER	4
25	5624-08-109-2	MOUNT - CAM ROLLER	2
24	5304-08-106-2	RETAINER HOPPER	2
23	5304-08-106-2	RETAINER HOPPER	2
22	SPACER	A09-S-0.750-0.281-0.250	8
21	5624-08-106	PLATE - CORNER BRACE	4
20	5624-08-105	CHANNEL - HOPPER MOUNT CROSS	2
19	5304-08-102	PLATE - LIFTING BLOCK CLAMP PLATE	2
18	5402-08-101	BLOCK - VERT. ADJUST	2
17	SPACER	A09-S-0.750-0.422-0.250	8
16	5624-08-104	SHAFT - HOPPER JACK LINK	1
15	ADCO #	SIKO - DIGITAL INDICATOR (DA09S-02-4-2-E-VA15-O-A-K-AD-OZP-BP-ORP)	1
14	5402-08-100	SHAFT - HOPPER VERTICAL ADJUST	1
13	#91590A133	RETAINING RING - McMASTER CARR - ADCO #43260	2
12	5178-08-106	BUSHING - HOPPER ADJUST SHAFT	1
11	100-02-115	COUPLING, RULAND S.S. TWO-PIECE, 1/2" X 1/2"	3
10	WJ51U1N-12.00-STDX-STDX	INCH MACHINE SCREW JACK, 1 TON SIZE, 5:1 RATIO, UPRIGHT, PLAIN END, TRAVELING NUT, 12" RISE, STANDARD S.S. SHAFTS	2
9	5624-08-103	BAR - LIFTING JACK MOUNT	4
8	5624-08-110-2	WELDMENT - HOPPER MOUNT	1
7	5624-08-002	ASSEMBLY - ROLLER MOUNT PLATE	4
6	5402-08-103	RAIL - HOPPER MOUNT SUPPORT	2
5	SPACER	A09-S-1.500-0.422-1.206 (ina rails)	8
4	SPACER	A09-S-1.500-0.500-0.500	8
3	5624-08-101	BAR - HOPPER JACK MOUNT	2
2	5624-08-100-2	PANEL - HOPPER MOUNT	1
1	5624-08-100-2	PANEL - HOPPER MOUNT	1

THE INFORMATION CONTAINED IN THIS DRAWING IS THE SOLE PROPERTY OF ADCO MFG. ANY REPRODUCTION IN PART OR WHOLE WITHOUT THE WRITTEN PERMISSION OF ADCO MFG IS PROHIBITED.

ASSEMBLY - MAGAZINE MOUNT

ADCO
2170 ACADEMY AVE
SANGER, CA 93657
INFO@ADCOMFG.COM
559.875.5563

DRAWN BY: JJR
DATE: 02-16-15
SCALE: 1:10
REFERENCE: -
DRAWING NUMBER: 5624-08-001
SHEET 1/1
SIZE B

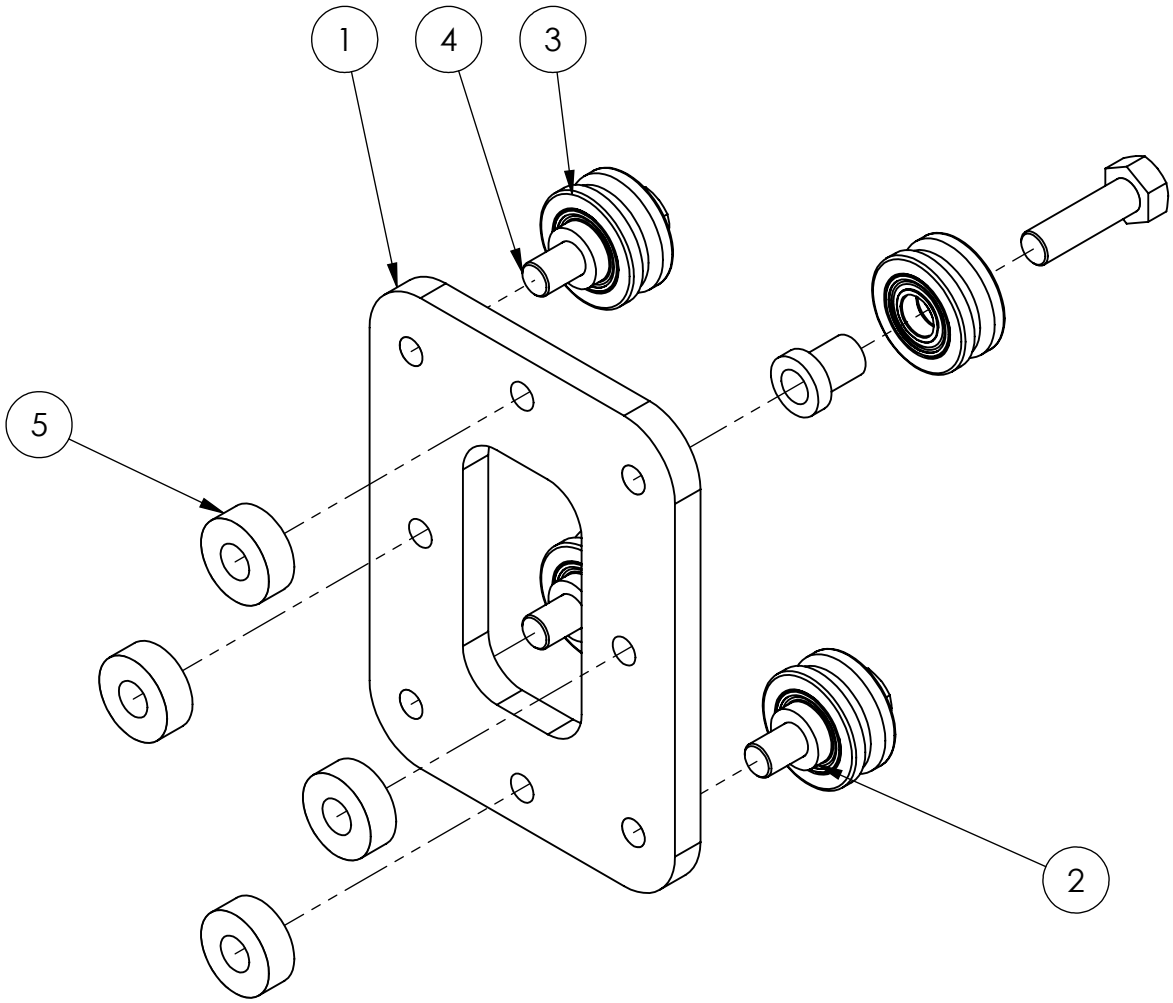

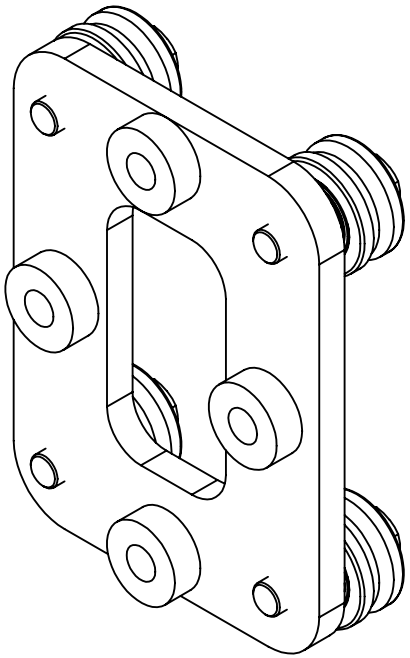

ITEM	PART NUMBER	DESCRIPTION	QTY
5	SPACER	A09-S-1.000-0.422-0.375	4
4	HARDWARE	BOLT - 10mm X 40mm LG SS HEX HEAD	4
3	ADCO #53608	ASSEMBLY - 52 ROLLER (WASHDOWN)	4
2	100-38-102	SPINDLE - SIZE 52 ROLLER	4
1	5624-08-102	PLATE - INA ROLLER MOUNT	1

08/13

ASSEMBLY - ROLLER MOUNT PLATE

ADCO where products meet packaging
2170 ACADEMY AVE
SANGER, CA 93657
INFO@ADCOMFG.COM
559.875.5563

DRAWN BY: JJR | DATE: 02-16-15 | SCALE: 1:2

REFERENCE: 5624-08-002 | DRAWING NUMBER: **5624-08-002** | SHEET 1/1 | SIZE A

THE INFORMATION CONTAINED IN THIS DRAWING IS THE SOLE PROPERTY OF ADCO MANUFACTURING. ANY REPRODUCTION IN PART OR WHOLE WITHOUT WRITTEN PERMISSION OF ADCO MFG IS PROHIBITED.

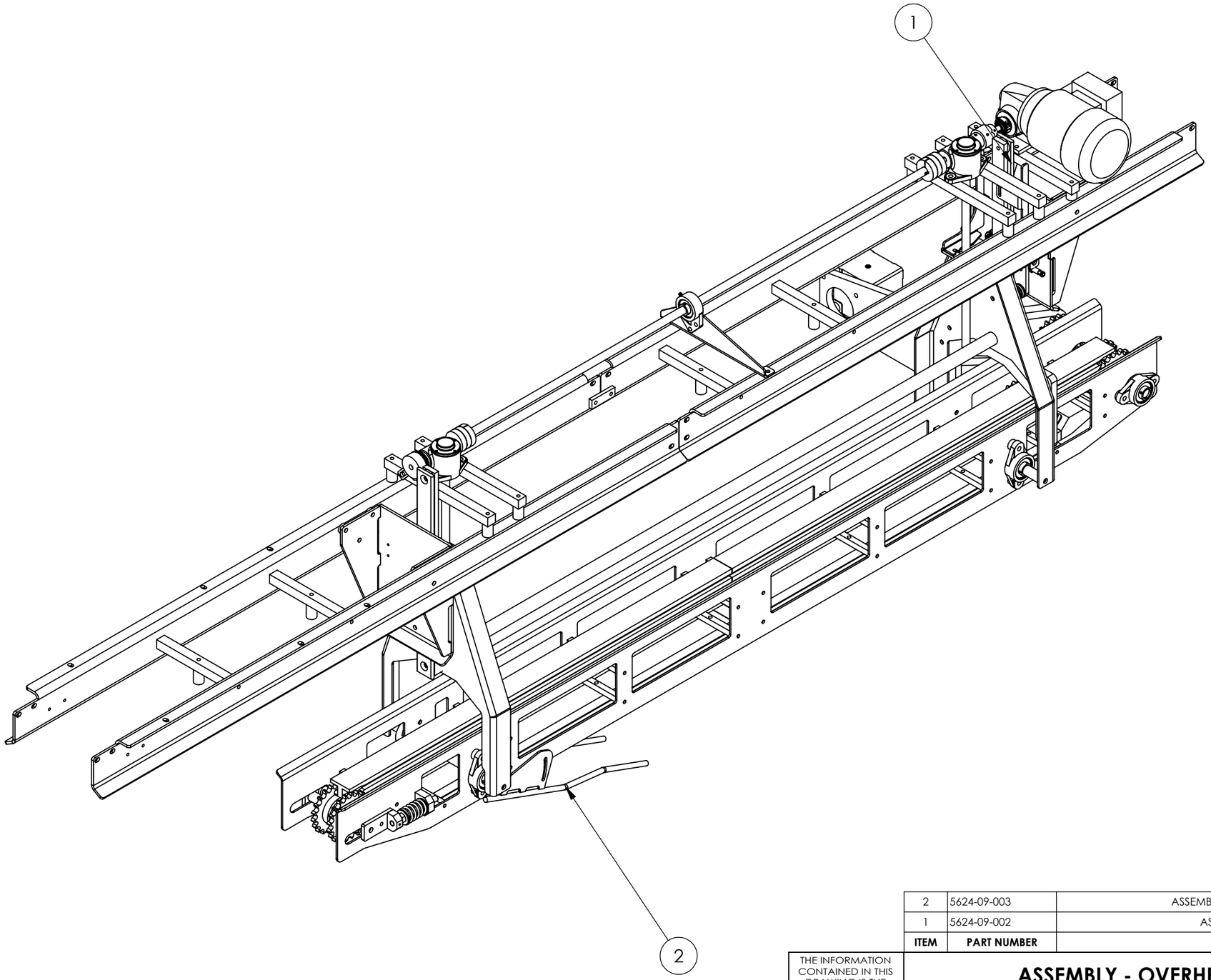

ITEM	PART NUMBER	DESCRIPTION	QTY
2	5624-09-003	ASSEMBLY - OVERHEAD CONVEYOR 7" WIDE	1
1	5624-09-002	ASSEMBLY - O.H. CONVEYOR LIFT	1

THE INFORMATION CONTAINED IN THIS DRAWING IS THE SOLE PROPERTY OF ADCO MFG. ANY REPRODUCTION IN PART OR WHOLE WITHOUT THE WRITTEN PERMISSION OF ADCO MFG IS PROHIBITED.

10/11

ASSEMBLY - OVERHEAD CONVEYOR

ADCO
2170 ACADEMY AVE
SANGER, CA 93657
INFO@ADCOMFG.COM
559.875.5563

DRAWN BY: JJR | DATE: 02-16-15 | SCALE: 1:10

REFERENCE: 5598-09-001 | DRAWING NUMBER: **5624-09-001** | SHEET 1/1 | SIZE B

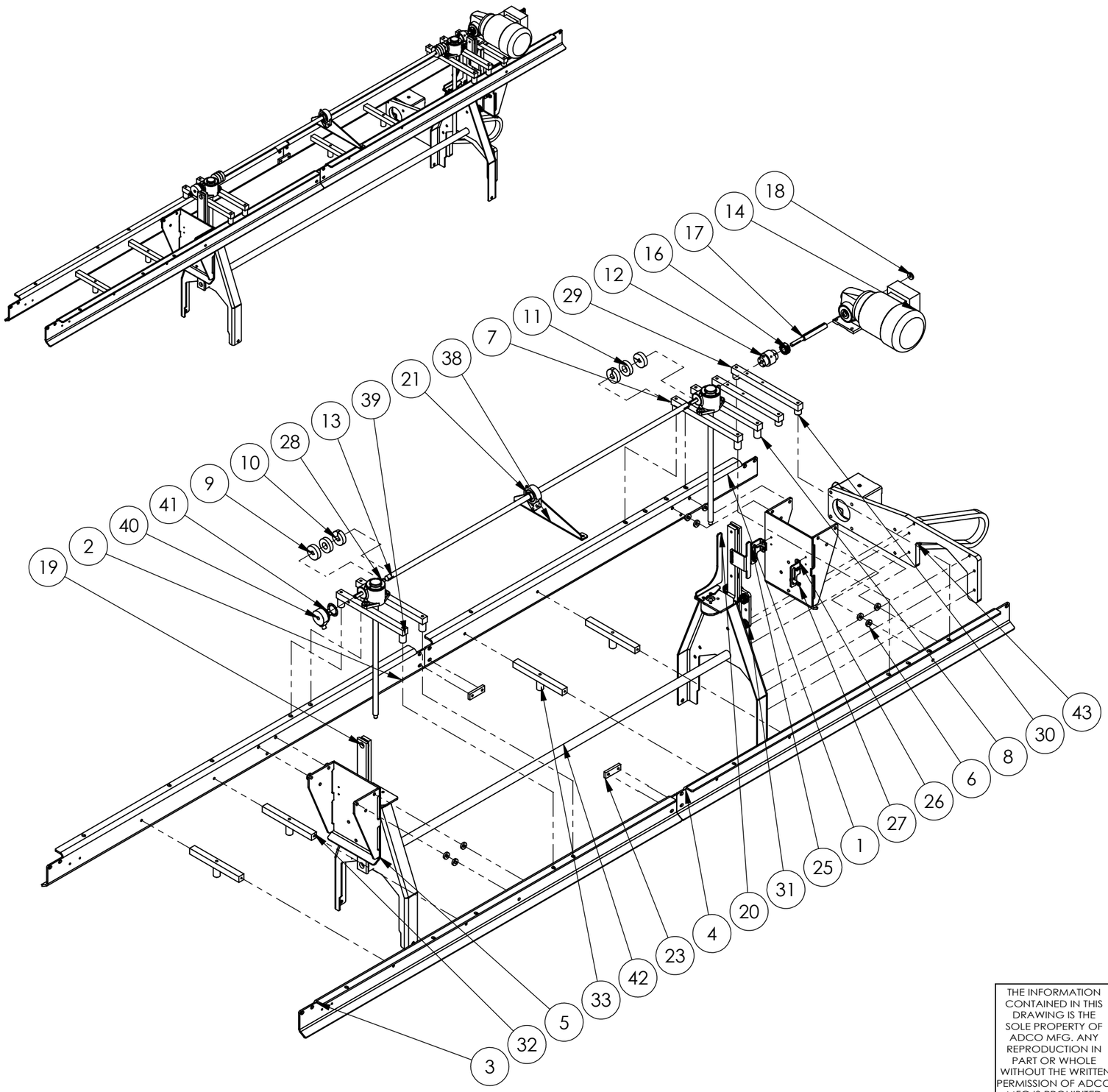

ITEM	PART NUMBER	DESCRIPTION	QTY
43	5624-09-004	ASSEMBLY - OH CONVEYOR DRIVE COMPONENTS	1
42	SPACER	M10-S-1.250-M10-72.380-M10	1
41	ADCO #	ENCODER - BEI #HS35F-100R2SS-5000-ABZC-7272-SM18-S	1
40	SPACER	A09-S-OD@Sketch1@Turck T8.5826.1U62.1200.SLDPRT-ID@Sketch2@Turck T8.5826.1U62.1200.SLDPRT-Length@Boss-Extrude1@Turck T8.5826.1U62.1200.SLDPRT	1
39	5598-09-114	BAR - JACK MOUNT (WITH HOLE FOR ENCODER TORQUE ARM)	1
38	5398-09-113	ANGLE - BEARING SUPPORT	1
37	SPROCKET	M01-S-601-16-25	1
36	SPACER	A09-S-1.000-0.422-0.500	4
35	#4303-0031	WC BRANHAM 1:1 SPIRAL BEVEL GEARBOX	1
34	5402-09-109	PLATE - O.H. GEARBOX MOUNT	1
33	5178-18-110	SPACER - LIGHT MOUNT	4
32	5178-18-109	BAR - LIGHT MOUNT	4
31	830-09-008	INA ROLLER CARRIER ASSEMBLY	2
30	SPACER	A09-S-1.000-0.421-0.788	4
29	830-09-110	BAR - MOTOR MOUNT	2
28	WJ5111N-18.00-STDX-STDX	INCH MACHINE SCREW JACK, 1 TON SIZE, 5:1 RATIO, INVERTED, PLAIN END, TRAVELING NUT, 18" RISE, STANDARD S.S. SHAFTS.	2
27	ADCO#	EFECTOR, PROX SENSOR - IFC 204	2
26	5398-18-134	ANGLE - LOWER LIMIT PROX MOUNT	1
25	5398-18-134	ANGLE - LOWER LIMIT PROX MOUNT	1
24	ADCO #	ENCODER PRODUCTS - #25T-25T-25SG-1024NV1QHV-SMX-S3 ENCODER	1
23	NUTPLATE	M24-S-2.000-3.000-1.000-0.375-M10	2
22	5386-12-103	NUTPLATE - SIDE ADJ BEARING	1
21	ADCO# 45504	SUCTFB204 - 3 - BOLT FLANGE BEARING - Ø20mm	1
20	5580-09-004	VERTICAL OVERHEAD LIFT ASSEMBLY	1
19	830-09-009	VERTICAL OVERHEAD LIFT ASSEMBLY	1
18	SPACER	A09-S-1.000-0.344-0.179	1
17	5398-09-106	SHAFT - O.H. LIFT @ MOTOR	1
16	ADCO# 34220	TWO-PIECE CLAMP COLLAR, 20MM BORE, SS	1
15	5398-09-105	CHANNEL - ADJ. MOTOR MOUNT	1
14	SK1SMID40AX - 80S/4-CUS	.75HP GEARMOTOR - 5:1 RATIO 342 RPM - S.S. Ø 20mm HOLLOW SHAFT - MOUNT POS. M1 - NSD+ PAINT 230-460V/3PH/60HZ	1
13	SHAFT	A21-0.750-61.000-1.000-1.000	1
12	H-TLC-500-C 0.500 x 0.500 4 to 60	TORQ-TENDER TORQUE LIMITER, 500 SIZE	1
11	60635K99	Acetal Disc for 2-3/16" Outside Diameter HI-Misalignment Pinhole-Disc Coupling Hub	2
10	60635K92	HI-Misalignment Pinhole-Disc Coupling Hub 3/4" Bore	2
9	60635K94	HI-Misalignment Pinhole-Disc Coupling Hub 1/2" Bore	2
8	SPACER	A09-S-1.000-0.422-1.375	8
7	5398-09-102	BAR - JACK MOUNT	3
6	SPACER	A09-S-1.000-0.421-0.250	12
5	830-09-111	WELDMENT - CARRIAGE MOUNT	2
4	830-09-114	CHANNEL - O.H. COVNEYOR MOUNT DOWNSTREAM	1
3	830-09-116	CHANNEL - O.H. CONVEYOR MOUNT UPSTREAM	1
2	830-09-116	CHANNEL - O.H. CONVEYOR MOUNT UPSTREAM	1
1	830-09-114	CHANNEL - O.H. COVNEYOR MOUNT DOWNSTREAM	1

THE INFORMATION CONTAINED IN THIS DRAWING IS THE SOLE PROPERTY OF ADCO MFG. ANY REPRODUCTION IN PART OR WHOLE WITHOUT THE WRITTEN PERMISSION OF ADCO MFG IS PROHIBITED.

ASSEMBLY - O.H. CONVEYOR LIFT

ADCO
2170 ACADEMY AVE
SANGER, CA 93657
INFO@ADCOMFG.COM
559.875.5563

DRAWN BY: JJR	DATE: 02-16-15	SCALE: 1:16	
REFERENCE: 5598-09-002	DRAWING NUMBER: **5624-09-002**	SHEET 1/1	SIZE B

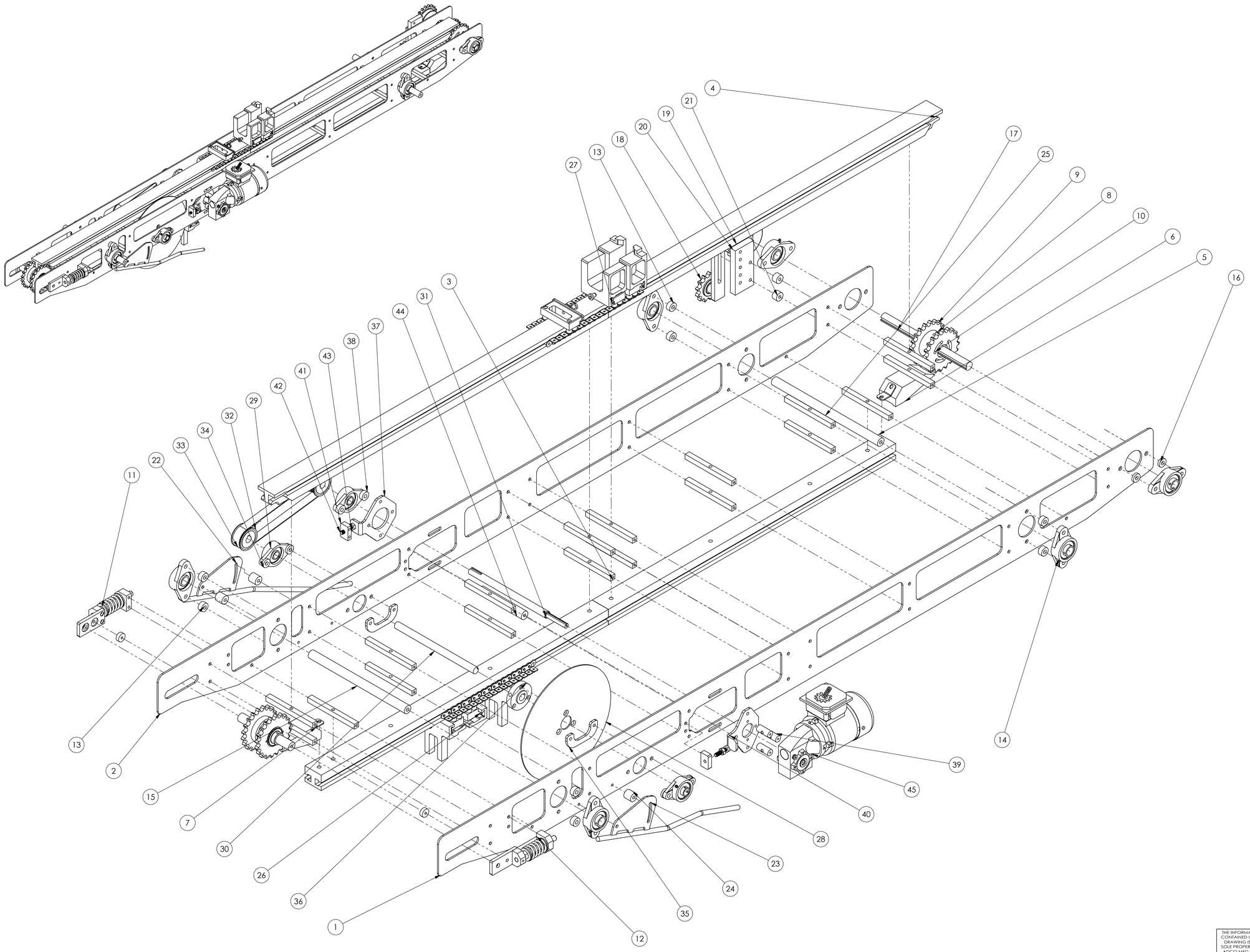

ITEM	PART NUMBER	DESCRIPTION	QTY
45	ADCO#	NORDGEAR, MOTOR - SK1SMID31AZ-63L-4 TBOX AT 2	1
44	SPACER	M10-S-1.000-M10-6.485-M10	1
43	ADCO#	McMaster-Carr, HEX NUT - M10	2
42	ADCO#	McMaster-Carr , CAP SCREW - M10 X 40MM HEX HEAD	2
41	5624-09-103	BAR - IDLER TAKEUP	2
40	5624-09-109	ANGLE - MOTOR MOUNT	1
39	5624-09-108	SPACER - MOTOR MOUNT	3
38	SAPCER	A09-S-1.000-0.422-0.429	2
37	5624-09-107	ANGLE - TUCK BEARING MOUNT	1
36	5624-09-106	HUB - TUCK DISK	1
35	5624-09-105	PLATE - BRG MOUNT NUTPLATE	2
34	SPACER	A09-S-1.000-0.422-0.250	4
33	HTBN76058M-250		1
32	ADCO#	PULLEY, - HTPK24S8M250-N20	2
31	5624-09-104	SHAFT - TUCK DRIVE	1
30	SHAFT	M20-20-11.875	1
29	#SUCTFL 204	2 BOLT FLANGE BEARING 20mm ADCO# 44679	3
28	5624-09-102	PLATE - O.H. TUCK DISK	1
27	5598-10-001	ASSEMBLY - O.H. CONVEYOR CHAIN	1
26	5598-10-001	ASSEMBLY - O.H. CONVEYOR CHAIN	1
25	SHAFT	M17-25-M12-15.891-M12	1
24	SPACER	A09-S-1.000-0.344-1.000	4
23	5178-09-134-3	WELDMENT - SIDE FLAP PLOW	1
22	5178-09-134-2	WELDMENT - SIDE FLAP PLOW	1
21	SPACER	A09-S-1.000-0.344-0.625	2
20	5398-09-115	BAR - IDLER MOUNT	1
19	SPROCKET	M01-S-601-20-25	1
18	5304-09-004	TAKE-UP SPROCKET	1
17	SHAFT	M20-25-12.750	1
16	SPACER	A09-S-1.000-0.421-0.250	2
15	SHAFT	M17-25-M12-14.391-M12	1
14	ADCO# 41430	SUCTFL205 - 2 BOLT FLANGE BEARING - Ø25mm	6
13	SPACER	A09-S-1.000-0.422-0.500	8
12	830-09-124	BLOCK - TAKEUP	2
11	830-09-011	ASSEMBLY - CONVEYOR TAKE UP	1
10	SPROCKET	M08-S-0060-20-S	1
9	SPROCKET	A08-S-0060-20-H	1
8	5178-09-107	HUB - DRIVE SPROCKET	1
7	5178-09-106	MOUNT - LEADIN RAIL	2
6	5178-09-102	RAIL - OVERHEAD CHAIN LEADIN	2
5	5267-09-106	RAIL - OVERHEAD CHAIN	2
4	5267-09-107	RAIL - OVERHEAD CHAIN RETURN	2
3	5402-09-100	BAR - OVERHEAD CROSS	18
2	5624-09-101-2	PANEL - OVERHEAD CONVEYOR	1
1	5624-09-101-2	PANEL - OVERHEAD CONVEYOR	1

THE INFORMATION CONTAINED IN THIS DRAWING IS THE SOLE PROPERTY OF ADCO MFG. ANY REPRODUCTION IN PART OR WHOLE WITHOUT THE WRITTEN PERMISSION OF ADCO MFG IS PROHIBITED.

ASSEMBLY - OVERHEAD CONVEYOR 7" WIDE

ADCO
2170 ACADEMY AVE
SANGER, CA 93657
INFO@ADCOMFG.COM
559.875.5563

DRAWN BY: JJR	DATE: 02-16-15	SCALE: 1:5
REFERENCE: 5598-09-003	DRAWING NUMBER: 5624-09-003	SHEET 1/1 SIZE D

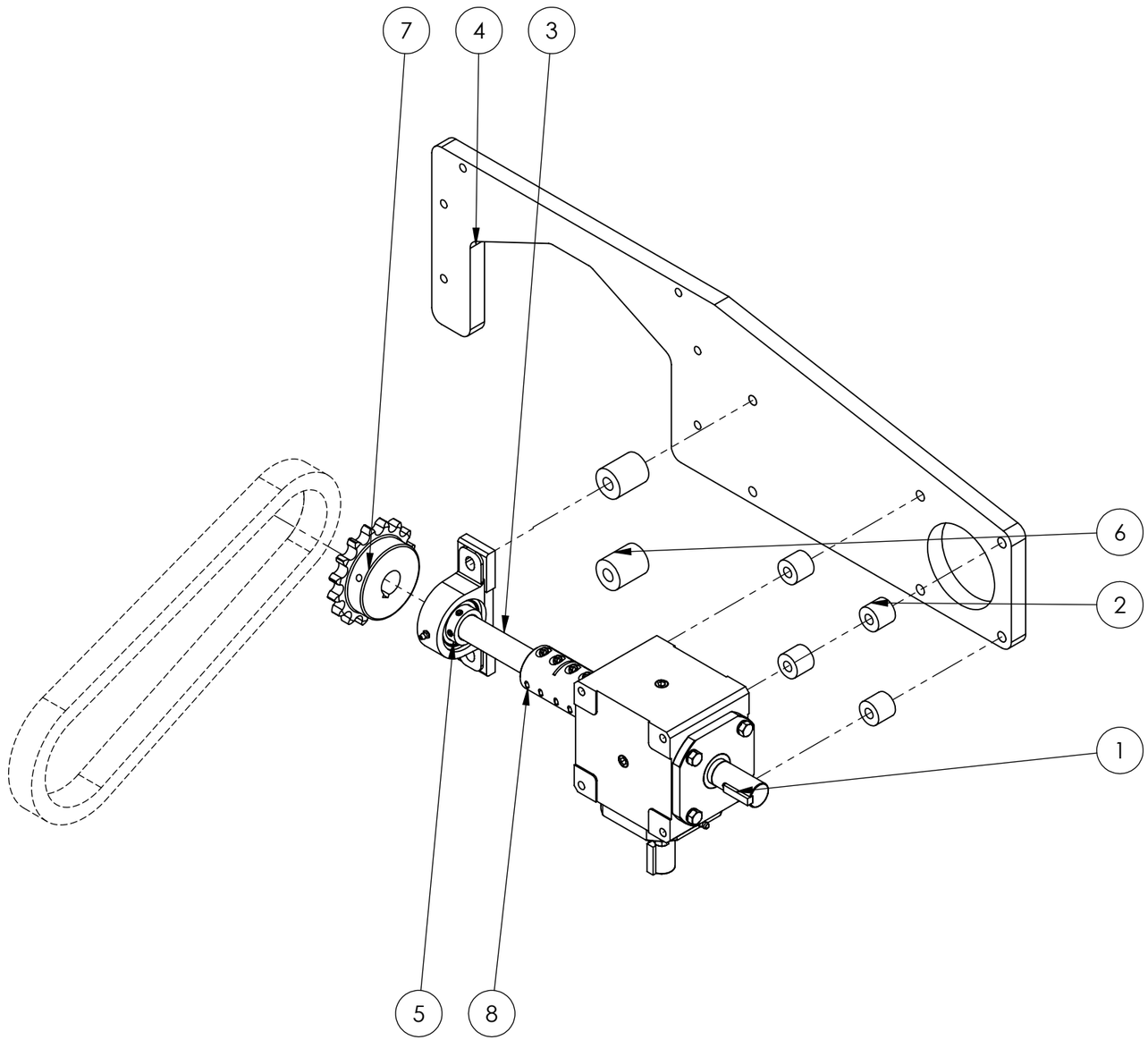

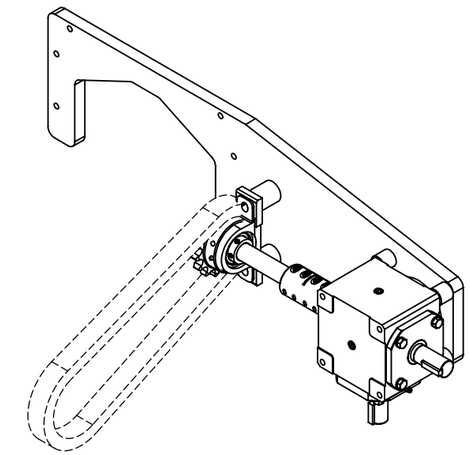

ITEM	PART NUMBER	DESCRIPTION	QTY
8	100-02-193	COUPLING, RULAND TWO-PIECE, 25mm x 25mm, SS	1
7	SPROCKET	M01-S-601-16-25	1
6	SPACER	A09-S-1.250-0.515-1.500	2
5	ADCO# 48692	IPTCI - SUCTP205 - THERMOPLASTIC PILLOW BLOCKS - Ø25mm	1
4	5598-09-102	BAR - O.H. CONV GEARBOX MOUNT	1
3	SHAFT	M20-25-6.875	1
2	SPACER	A09-S-1.000-0.422-0.875	4
1	#4303-0031	WC BRANHAM 1:1 SPIRAL BEVEL GEARBOX	1

THE INFORMATION CONTAINED IN THIS DRAWING IS THE SOLE PROPERTY OF ADCO MFG. ANY REPRODUCTION IN PART OR WHOLE WITHOUT THE WRITTEN PERMISSION OF ADCO MFG IS PROHIBITED.

16/11

ASSEMBLY - OH CONVEYOR DRIVE COMPONENTS

ADCO
2170 ACADEMY AVE
SANGER, CA 93657
INFO@ADCOMFG.COM
559.875.5563

DRAWN BY: JJR	DATE: 02-16-15	SCALE: 1:5	
REFERENCE: 5598-09-004	DRAWING NUMBER: **5624-09-004**	SHEET 1/1	SIZE B

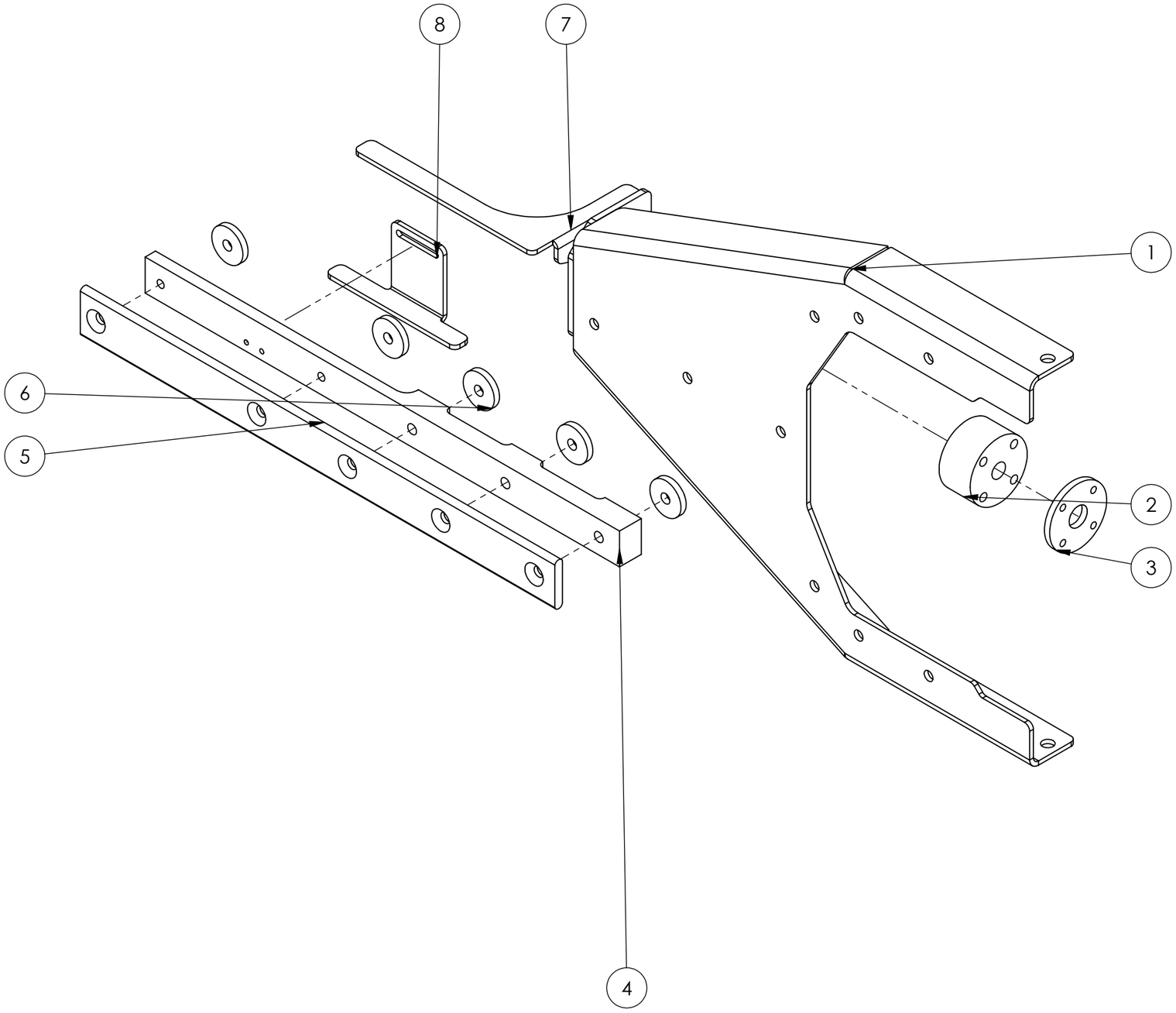

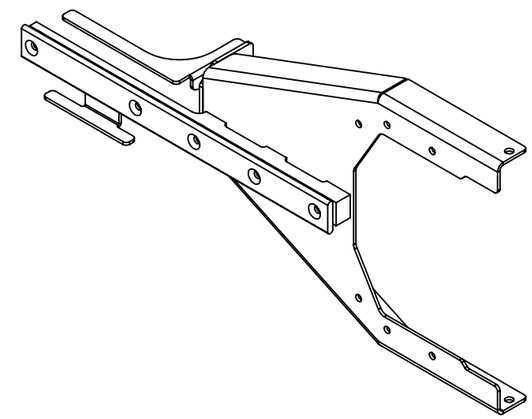

ITEM	PART NUMBER	DESCRIPTION	QTY
8	5402-18-121	ANGLE - LOWER LEVEL FLAG	1
7	5402-18-122	ANGLE - UPPER LIMIT FLAG	1
6	SPACER	A09-S-1.500-0.422-0.250	5
5	5398-09-103	RAIL - O.H. CONVEYOR SUPPORT	1
4	5398-09-110	BAR - O.H. RAIL STIFFENER	1
3	5267-09-128	PLATE - LIFTING BLOCK NUTPLATE	1
2	5267-09-127	BLOCK - O.H. CONV. VERT. ADJUST	1
1	5580-09-100	WELDMENT - OVERHEAD LIFT DOWNSTREAM	1

THE INFORMATION CONTAINED IN THIS DRAWING IS THE SOLE PROPERTY OF ADCO MFG. ANY REPRODUCTION IN PART OR WHOLE WITHOUT THE WRITTEN PERMISSION OF ADCO MFG IS PROHIBITED.

VERTICAL OVERHEAD LIFT ASSEMBLY

ADCO
2170 ACADEMY AVE
SANGER, CA 93657
INFO@ADCOMFG.COM
559.875.5563

DRAWN BY: N.S.
DATE: 07-09-14
SCALE: 1:4
REFERENCE: 5402-09-006
DRAWING NUMBER: **5580-09-004**
SHEET 1/1
SIZE B

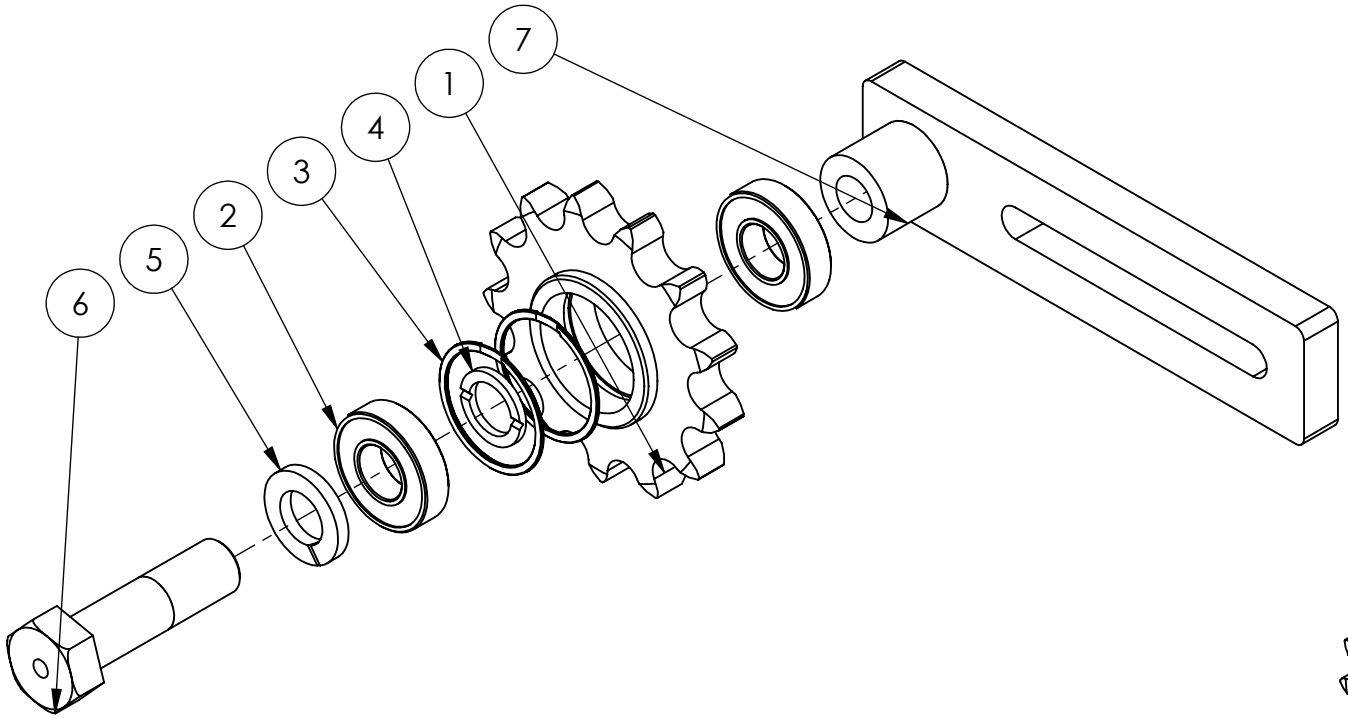

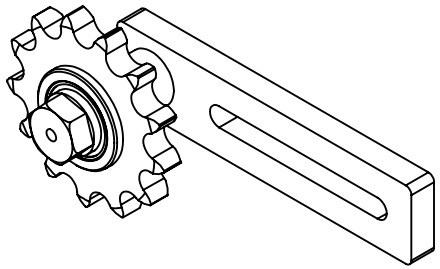

ITEM	PART NUMBER	DESCRIPTION	QTY
7	7710783	BRACKET - IDLER ADJUST	1
6	15AT694G	BOLT - LUBE	1
5	HARDWARE	5/8" SPLIT LOCK WASHER	1
4	820-0154	SPACER, BEARING LUBE	1
3	ADCO# 30534	SPIROLOX INTERNAL RETAINING RING (RR-137)	2
2	ADCO# 39090	BEARING - 5/8" MRC RADIAL (R-10ZZST)	2
1	100-05-103	WELDMENT - #60-13T IDLER (WASHDOWN)	1

10/11

TAKE-UP SPROCKET

ADCO
2170 ACADEMY AVE
SANGER, CA 93657
INFO@ADCOMFG.COM
559.875.5563

DRAWN BY: JJR | DATE: 4/25/13 | SCALE: 1:2

REFERENCE: - | DRAWING NUMBER: **5304-09-004** | SHEET 1/1 | SIZE A

THE INFORMATION CONTAINED IN THIS DRAWING IS THE SOLE PROPERTY OF ADCO MANUFACTURING. ANY REPRODUCTION IN PART OR WHOLE WITHOUT WRITTEN PERMISSION OF ADCO MFG IS PROHIBITED.

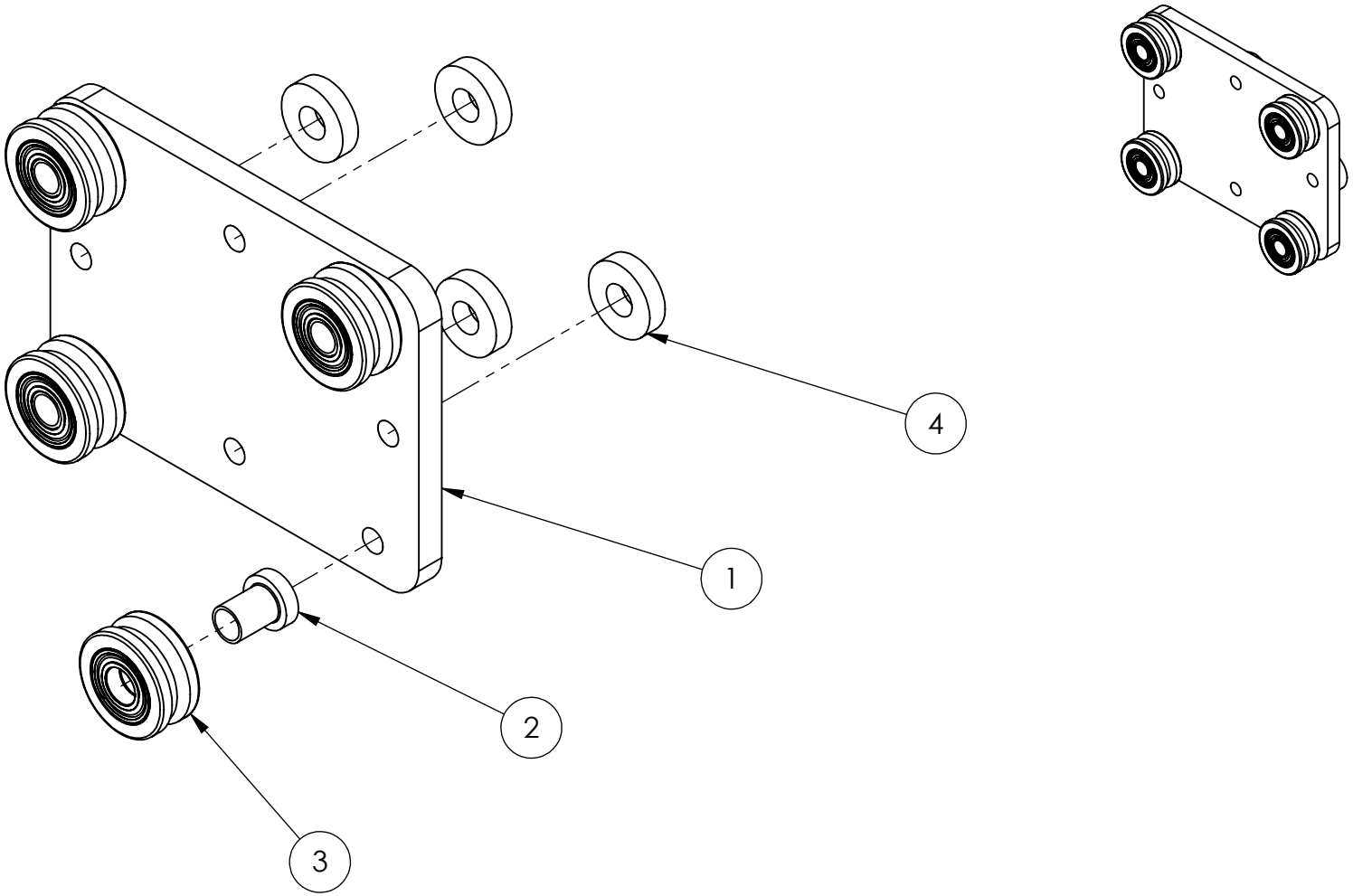

ITEM	PART NUMBER	DESCRIPTION	QTY
4	SPACER	A09-S-1.000-0.421-0.250	4
3	100-38-011	ASSEMBLY - 52 ROLLER (WASHDOWN) - ADCO #53608	4
2	100-38-102	SPINDLE - SIZE 52 ROLLER	4
1	830-09-115	PLATE - ROLLERS MOUNT	1

08/13

INA ROLLER CARRIER ASSEMBLY

ADCO where products meet packaging
2170 ACADEMY AVE
SANGER, CA 93657
INFO@ADCOMFG.COM
559.875.5563

DRAWN BY: CR | DATE: 07/10/2014 | SCALE: 1:4

REFERENCE: - | DRAWING NUMBER: **830-09-008** | SHEET 1/1 | SIZE A

THE INFORMATION CONTAINED IN THIS DRAWING IS THE SOLE PROPERTY OF ADCO MANUFACTURING. ANY REPRODUCTION IN PART OR WHOLE WITHOUT WRITTEN PERMISSION OF ADCO MFG IS PROHIBITED.

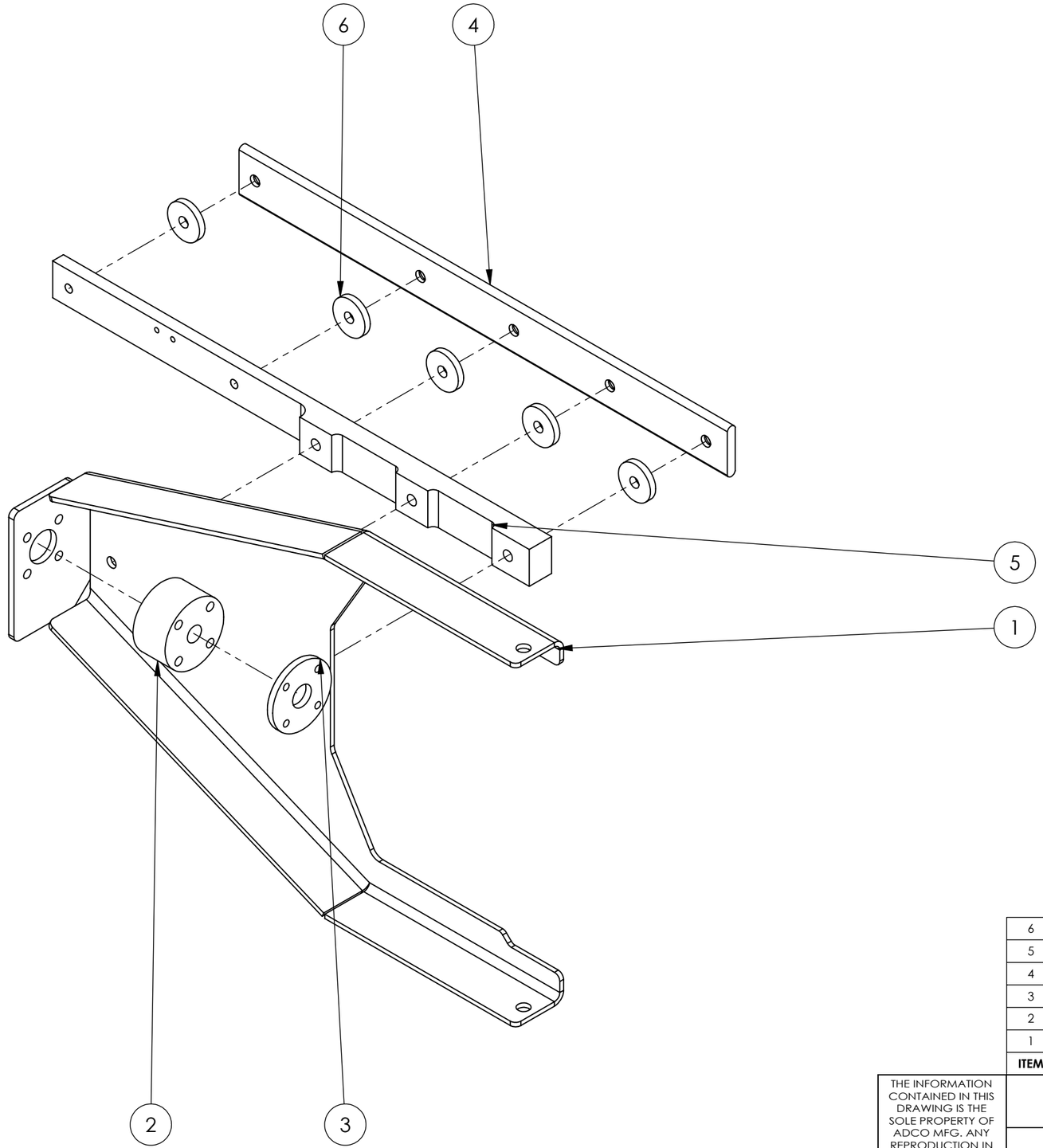

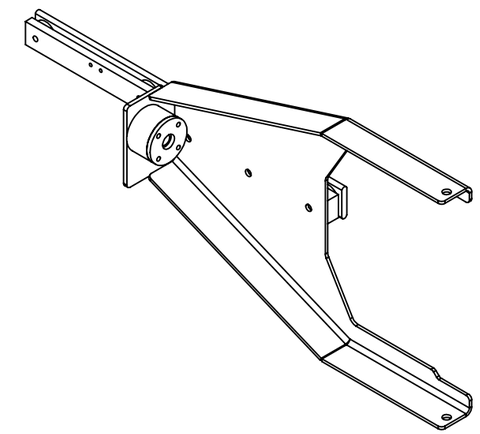

ITEM	PART NUMBER	DESCRIPTION	QTY
6	SPACER	A09-S-1.500-0.422-0.250	5
5	5398-09-110	BAR - O.H. RAIL STIFFENER	1
4	5398-09-103	RAIL - O.H. CONVEYOR SUPPORT	1
3	5267-09-128	PLATE - LIFTING BLOCK NUTPLATE	1
2	5267-09-127	BLOCK - O.H. CONV. VERT. ADJUST	1
1	830-09-119	WELDMENT - OVERHEAD LIFT UPSTREAM	1

THE INFORMATION CONTAINED IN THIS DRAWING IS THE SOLE PROPERTY OF ADCO MFG. ANY REPRODUCTION IN PART OR WHOLE WITHOUT THE WRITTEN PERMISSION OF ADCO MFG IS PROHIBITED.

10/11

VERTICAL OVERHEAD LIFT ASSEMBLY

ADCO
2170 ACADEMY AVE
SANGER, CA 93657
INFO@ADCOMFG.COM
559.875.5563

DRAWN BY: N.S.	DATE: 07-09-14	SCALE: 1:4	
REFERENCE: 5402-09-005	DRAWING NUMBER: **830-09-009**	SHEET 1/1	SIZE B

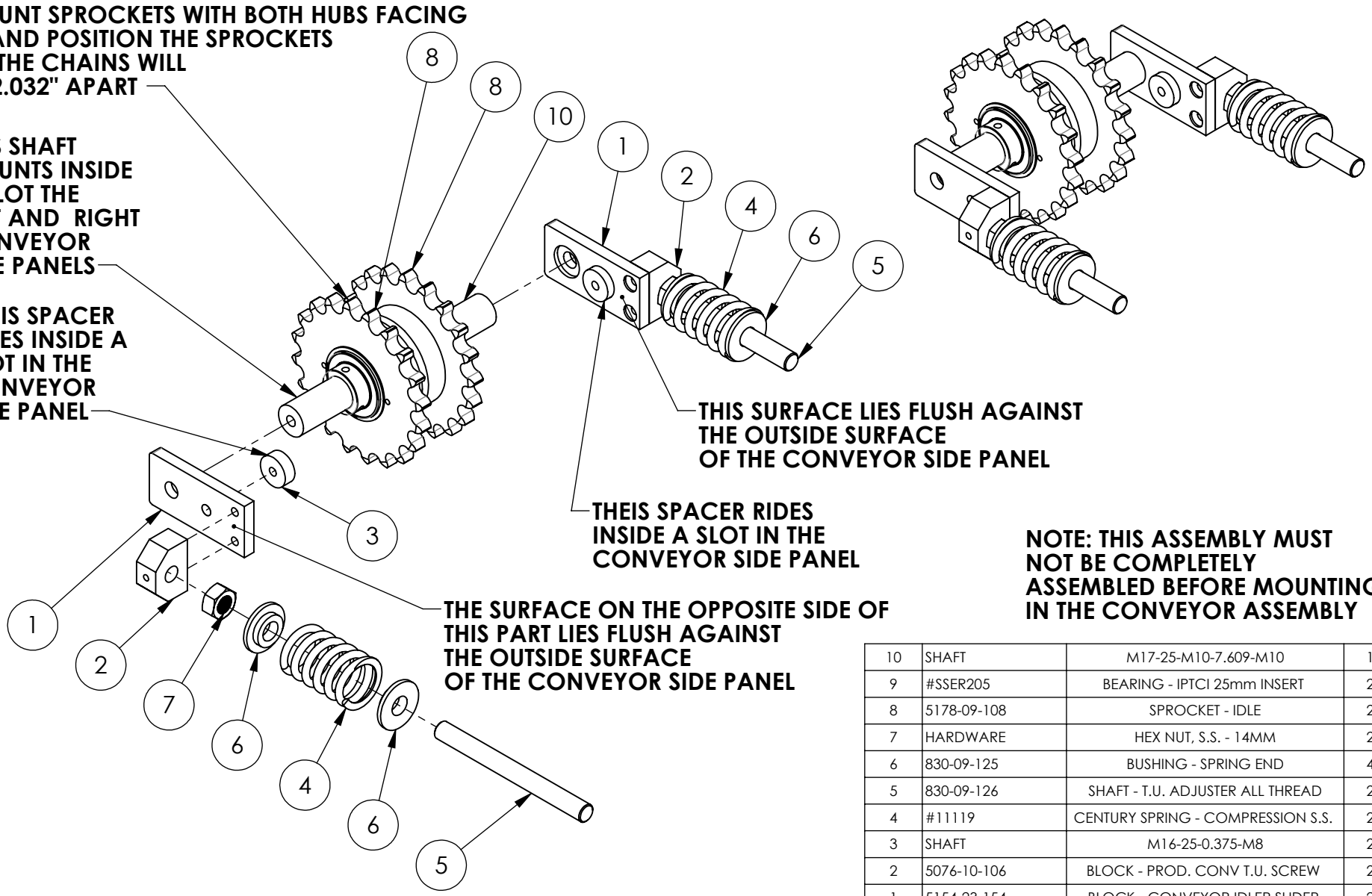

NOTE: THIS ASSEMBLY MUST NOT BE COMPLETELY ASSEMBLED BEFORE MOUNTING IN THE CONVEYOR ASSEMBLY

ITEM	PART NUMBER	DESCRIPTION	QTY
10	SHAFT	M17-25-M10-7.609-M10	1
9	#SSER205	BEARING - IPTCI 25mm INSERT	2
8	5178-09-108	SPROCKET - IDLE	2
7	HARDWARE	HEX NUT, S.S. - 14MM	2
6	830-09-125	BUSHING - SPRING END	4
5	830-09-126	SHAFT - T.U. ADJUSTER ALL THREAD	2
4	#11119	CENTURY SPRING - COMPRESSION S.S.	2
3	SHAFT	M16-25-0.375-M8	2
2	5076-10-106	BLOCK - PROD. CONV T.U. SCREW	2
1	5154-23-154	BLOCK - CONVEYOR IDLER SLIDER	2

08/13

ASSEMBLY - CONVEYOR TAKE UP

ADCO where products meet packaging
2170 ACADEMY AVE
SANGER, CA 93657
INFO@ADCOMFG.COM
559.875.5563

DRAWN BY: N.S. | DATE: 07-09-14 | SCALE: 1:4

REFERENCE: 5267-19-002 | DRAWING NUMBER: **830-09-011** | SHEET 1/1 | SIZE A

THE INFORMATION CONTAINED IN THIS DRAWING IS THE SOLE PROPERTY OF ADCO MANUFACTURING. ANY REPRODUCTION IN PART OR WHOLE WITHOUT WRITTEN PERMISSION OF ADCO MFG IS PROHIBITED.

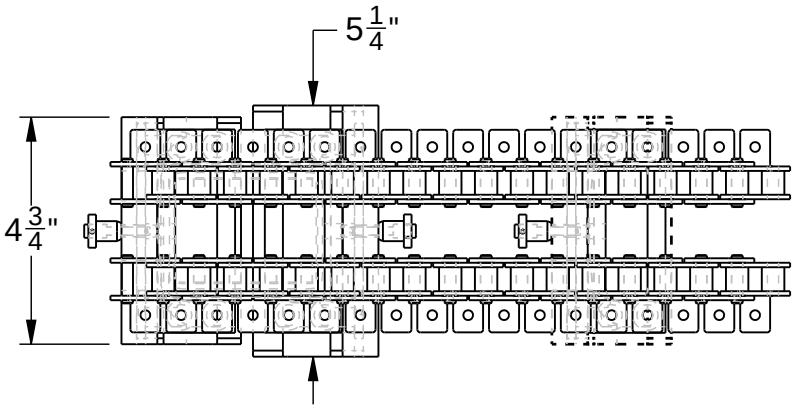

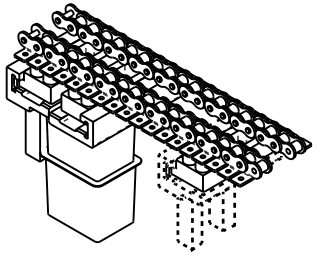

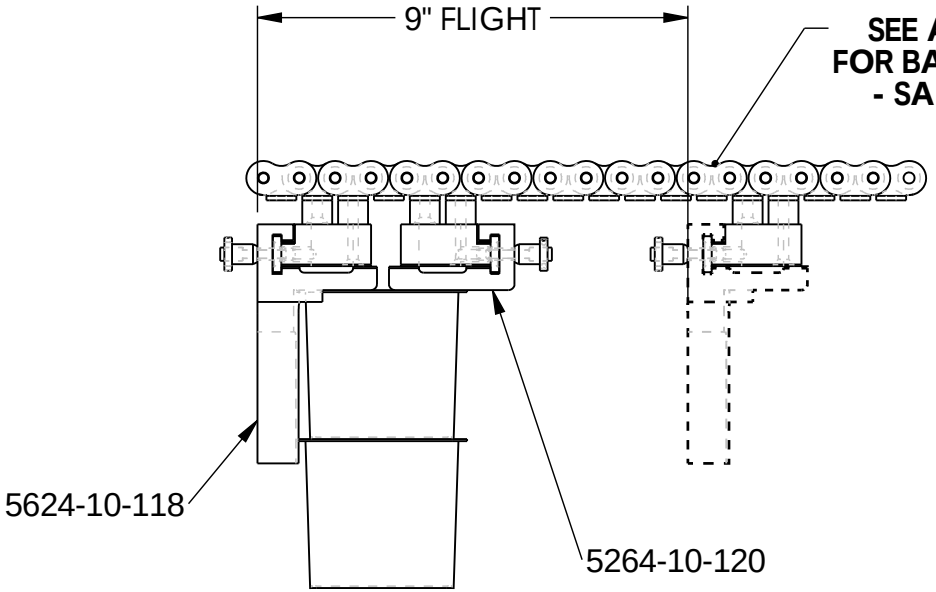

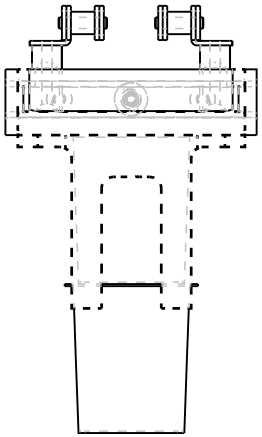

ONE FLIGHT SHOWN - 24 FLIGHTS NEEDED
24 FLIGHTS @ 9" CENTERS = 216" LONG CHAIN

MFG NOTE: BREAK ALL SHARP CORNERS & EDGES

THE INFORMATION CONTAINED IN THIS DRAWING IS THE SOLE PROPERTY OF ADCO MANUFACTURING. ANY REPRODUCTION IN PART OR WHOLE WITHOUT THE WRITTEN PERMISSION OF ADCO MANUFACTURING IS PROHIBITED.

8/13

MATERIAL: SEE NOTES	TOLERANCES: 1/16" ± 1/64" .00 ± .01 .000 ± .005 .0000 ± .0005 1° ± 10'	OPPOSITE -3	
		SHOWN -2	
DESCRIPTION: ASSEMBLY - O.H. LUGS, REC. DOUBLE		**MAKE AS:**	**QTY**

ADCO where products meet packaging
2170 ACADEMY AVE
SANGER, CA 93657
INFO@ADCOMFG.COM
559.875.5563

DRAWN BY: N.S.	DATE: 03-28-15	SCALE: 1:4	
REFERENCE:	**DRAWING NUMBER:** **5624-10-002**	SHEET 1/1	SIZE A

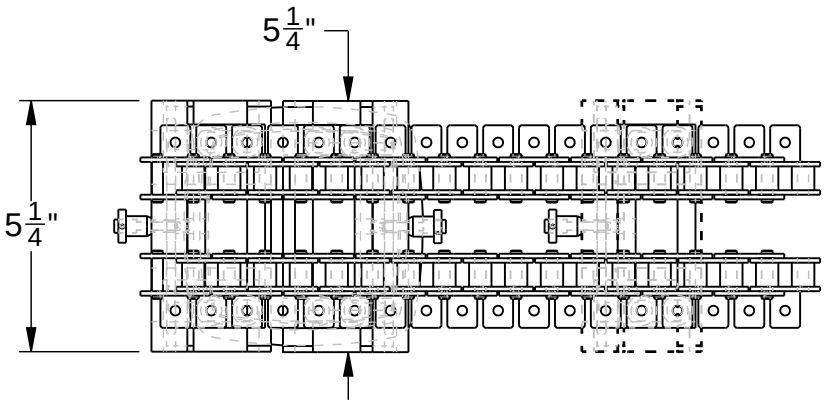

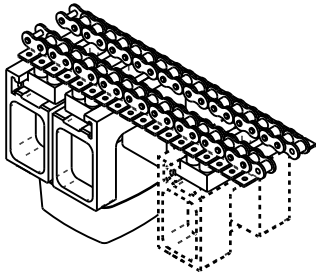

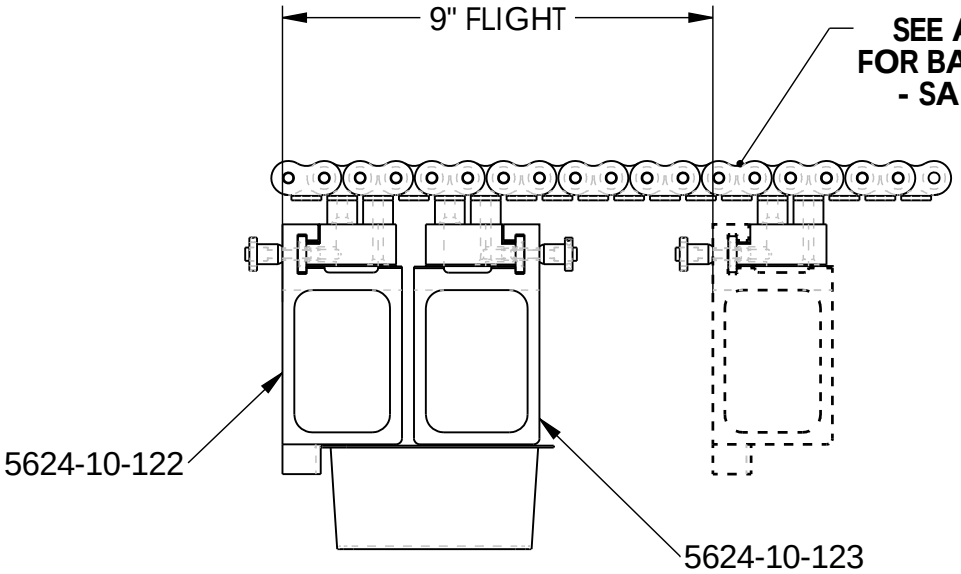

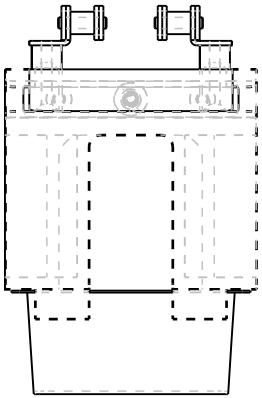

ONE FLIGHT SHOWN - 24 FLIGHTS NEEDED
24 FLIGHTS @ 9" CENTERS = 216" LONG CHAIN

MFG NOTE: BREAK ALL SHARP CORNERS & EDGES

THE INFORMATION CONTAINED IN THIS DRAWING IS THE SOLE PROPERTY OF ADCO MANUFACTURING. ANY REPRODUCTION IN PART OR WHOLE WITHOUT THE WRITTEN PERMISSION OF ADCO MANUFACTURING IS PROHIBITED.

8/13

MATERIAL: SEE NOTES	TOLERANCES: 1/16" ± 1/64" .00 ± .01 .000 ± .005 .0000 ± .0005 1° ± 10'	OPPOSITE -3	
		SHOWN -2	
DESCRIPTION: ASSEMBLY - O.H. LUGS, SQUARE SINGLE		**MAKE AS:**	**QTY**

ADCO where products meet packaging
2170 ACADEMY AVE
SANGER, CA 93657
INFO@ADCOMFG.COM
559.875.5563

DRAWN BY: CR	DATE: 08/23/14	SCALE: 1:4	
REFERENCE:	**DRAWING NUMBER:** **5624-10-003**	SHEET 1/1	SIZE A

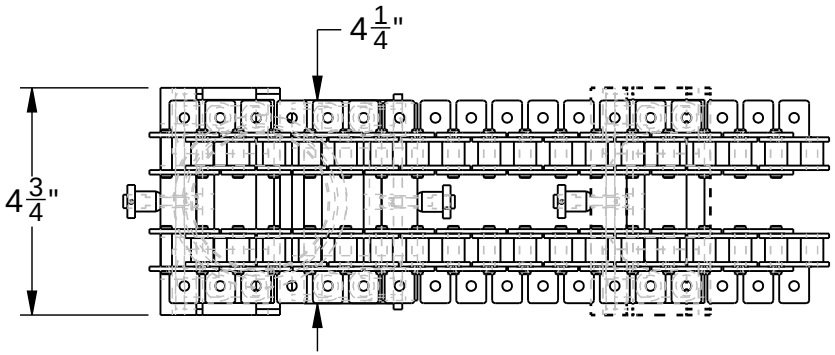

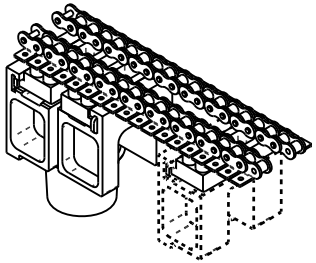

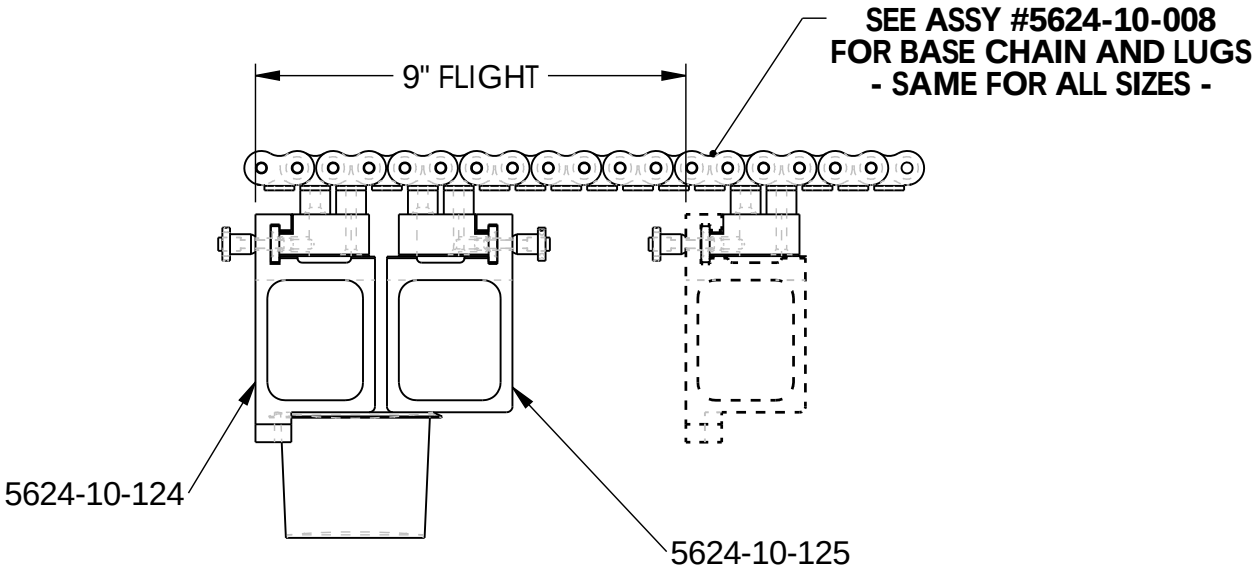

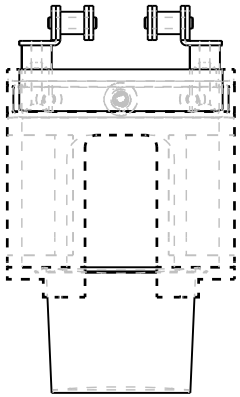

ONE FLIGHT SHOWN - 24 FLIGHTS NEEDED
24 FLIGHTS @ 9" CENTERS = 216" LONG CHAIN

MFG NOTE: BREAK ALL SHARP CORNERS & EDGES

THE INFORMATION CONTAINED IN THIS DRAWING IS THE SOLE PROPERTY OF ADCO MANUFACTURING. ANY REPRODUCTION IN PART OR WHOLE WITHOUT THE WRITTEN PERMISSION OF ADCO MANUFACTURING IS PROHIBITED.

8/13

MATERIAL: SEE NOTES	TOLERANCES: 1/16" ± 1/64" .00 ± .01 .000 ± .005 .0000 ± .0005 1° ± 10'	OPPOSITE -3	
		SHOWN -2	
DESCRIPTION: ASSEMBLY - O.H. LUGS, ROUND SINGLE		**MAKE AS:**	**QTY**

ADCO where products meet packaging
2170 ACADEMY AVE
SANGER, CA 93657
INFO@ADCOMFG.COM
559.875.5563

DRAWN BY: N.S.	DATE: 03-28-15	SCALE: 1:4	
REFERENCE:	**DRAWING NUMBER:** **5624-10-004**	SHEET 1/1	SIZE A

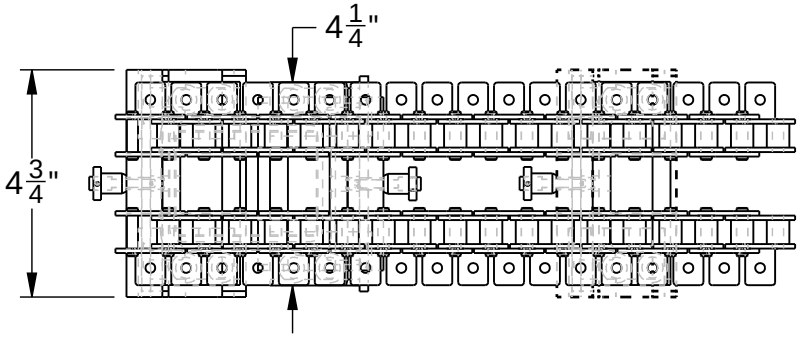

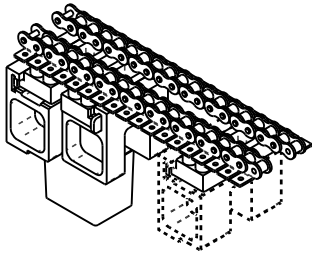

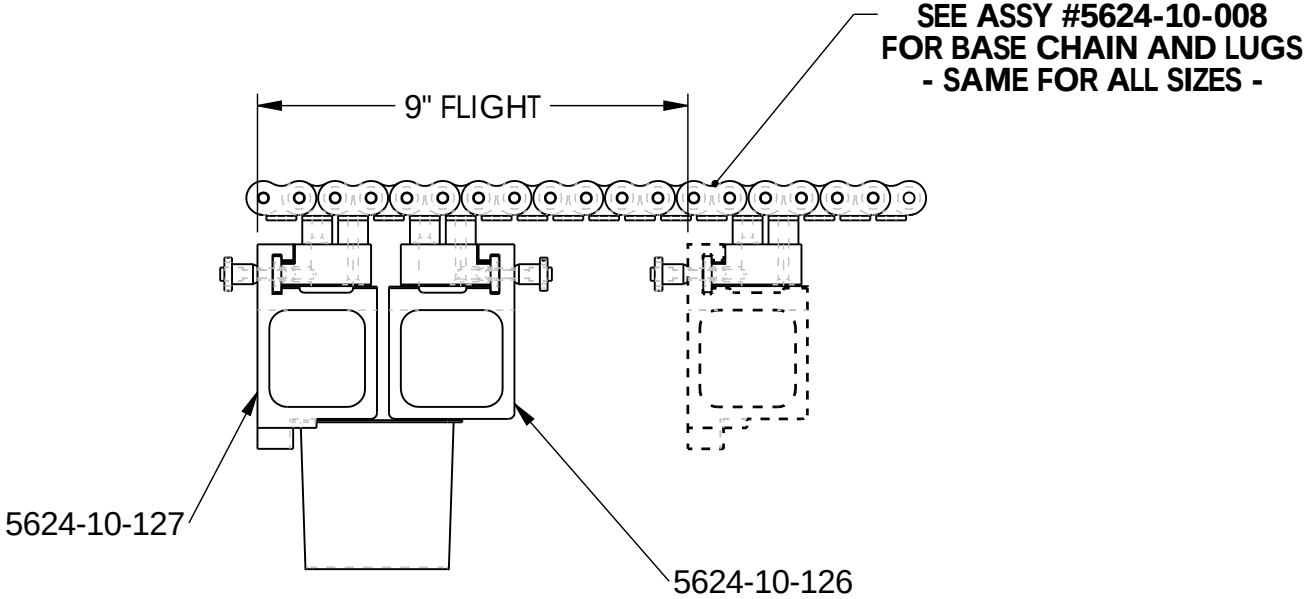

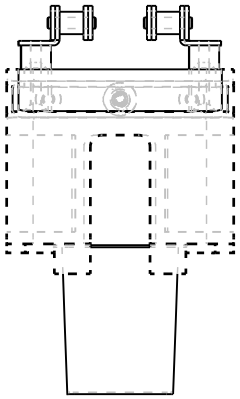

ONE FLIGHT SHOWN - 24 FLIGHTS NEEDED
24 FLIGHTS @ 9" CENTERS = 216" LONG CHAIN

MFG NOTE: BREAK ALL SHARP CORNERS & EDGES

THE INFORMATION CONTAINED IN THIS DRAWING IS THE SOLE PROPERTY OF ADCO MANUFACTURING. ANY REPRODUCTION IN PART OR WHOLE WITHOUT THE WRITTEN PERMISSION OF ADCO MANUFACTURING IS PROHIBITED.

8/13

MATERIAL: SEE NOTES	TOLERANCES: 1/16" ± 1/64" .00 ± .01 .000 ± .005 .0000 ± .0005 1° ± 10'	OPPOSITE -3	
		SHOWN -2	
DESCRIPTION: ASSEMBLY - O.H. LUGS, REC. SINGLE		**MAKE AS:**	**QTY**

ADCO where products meet packaging
2170 ACADEMY AVE
SANGER, CA 93657
INFO@ADCOMFG.COM
559.875.5563

DRAWN BY: N.S.	DATE: 03-28-15	SCALE: 1:4	
REFERENCE:	**DRAWING NUMBER:** **5624-10-005**	SHEET 1/1	SIZE A

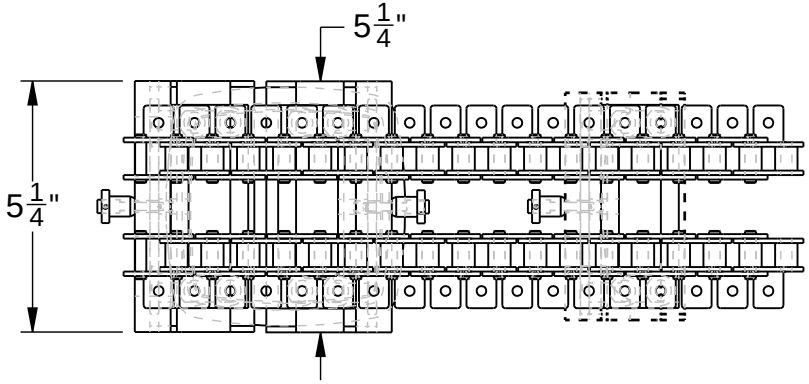

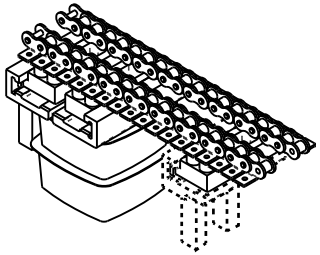

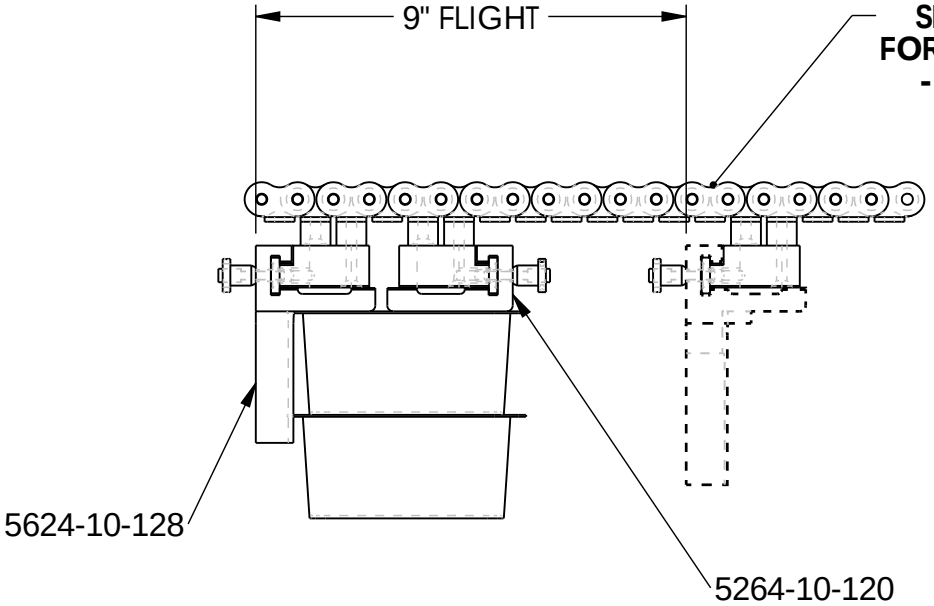

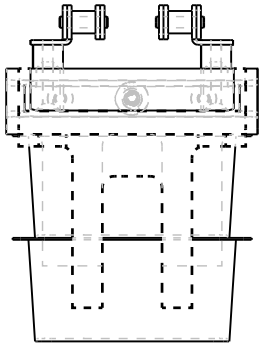

ONE FLIGHT SHOWN - 24 FLIGHTS NEEDED
24 FLIGHTS @ 9" CENTERS = 216" LONG CHAIN

MFG NOTE: BREAK ALL SHARP CORNERS & EDGES

THE INFORMATION CONTAINED IN THIS DRAWING IS THE SOLE PROPERTY OF ADCO MANUFACTURING. ANY REPRODUCTION IN PART OR WHOLE WITHOUT THE WRITTEN PERMISSION OF ADCO MANUFACTURING IS PROHIBITED.

8/13

MATERIAL: SEE NOTES	TOLERANCES: 1/16" ± 1/64" .00 ± .01 .000 ± .005 .0000 ± .0005 1° ± 10'	OPPOSITE -3	
		SHOWN -2	
DESCRIPTION: ASSEMBLY - O.H. LUGS, SQUARE DOUBLE		**MAKE AS:**	**QTY**

ADCO where products meet packaging
2170 ACADEMY AVE
SANGER, CA 93657
INFO@ADCOMFG.COM
559.875.5563

DRAWN BY: N.S.	DATE: 03-28-15	SCALE: 1:4	
REFERENCE:	**DRAWING NUMBER:** **5624-10-006**	SHEET 1/1	SIZE A

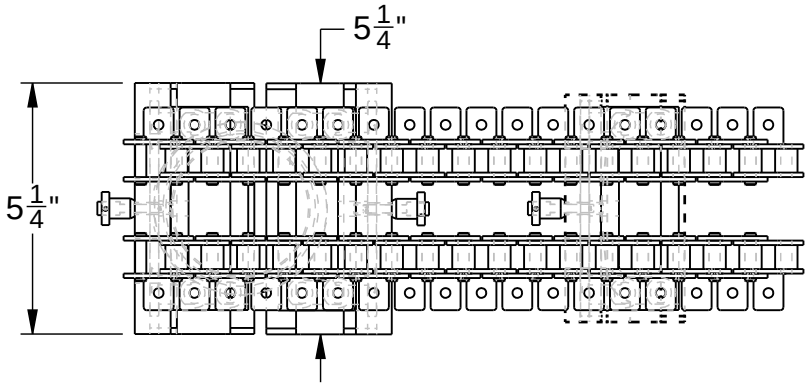

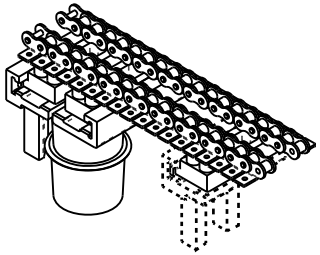

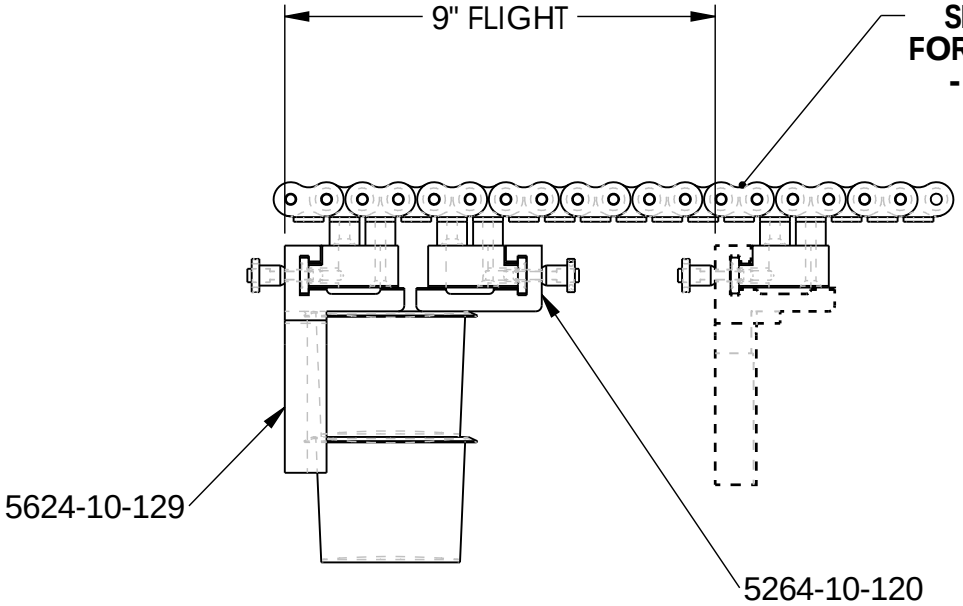

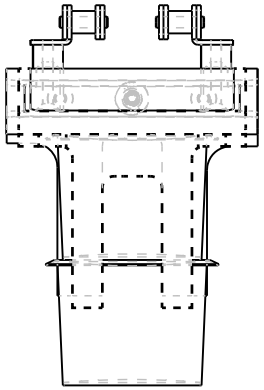

ONE FLIGHT SHOWN - 24 FLIGHTS NEEDED
24 FLIGHTS @ 9" CENTERS = 216" LONG CHAIN

MFG NOTE: BREAK ALL SHARP CORNERS & EDGES

THE INFORMATION CONTAINED IN THIS DRAWING IS THE SOLE PROPERTY OF ADCO MANUFACTURING. ANY REPRODUCTION IN PART OR WHOLE WITHOUT THE WRITTEN PERMISSION OF ADCO MANUFACTURING IS PROHIBITED.

8/13

MATERIAL: SEE NOTES	TOLERANCES: 1/16" ± 1/64" .00 ± .01 .000 ± .005 .0000 ± .0005 1° ± 10'	OPPOSITE -3	
		SHOWN -2	
DESCRIPTION: ASSEMBLY - O.H. LUGS, ROUND DOUBLE		**MAKE AS:**	**QTY**

ADCO where products meet packaging
2170 ACADEMY AVE
SANGER, CA 93657
INFO@ADCOMFG.COM
559.875.5563

DRAWN BY: N.S.	DATE: 03-28-15	SCALE: 1:4	
REFERENCE:	**DRAWING NUMBER:** **5624-10-007**	SHEET 1/1	SIZE A

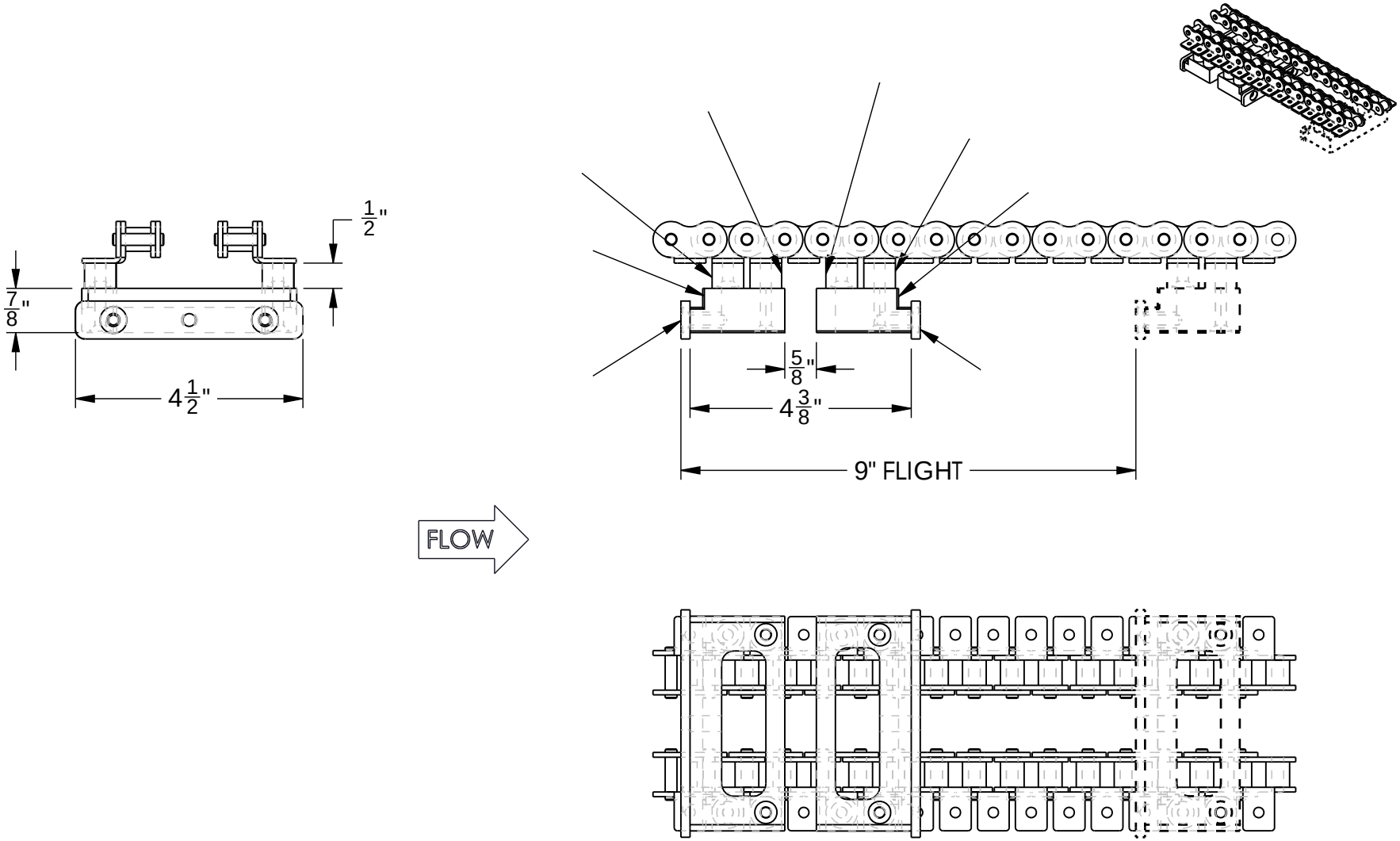

ONE FLIGHT SHOWN - 24 FLIGHTS NEEDED
24 FLIGHTS @ 9" CENTERS = 216" LONG CHAIN

MFG NOTE: BREAK ALL SHARP CORNERS & EDGES

THE INFORMATION CONTAINED IN THIS DRAWING IS THE SOLE PROPERTY OF ADCO MANUFACTURING. ANY REPRODUCTION IN PART OR WHOLE WITHOUT THE WRITTEN PERMISSION OF ADCO MANUFACTURING IS PROHIBITED.

8/13

MATERIAL: SEE NOTES	TOLERANCES: 1/16" ± 1/64" .00 ± .01 .000 ± .005 .0000 ± .0005 1° ± 10'	OPPOSITE -3	
		SHOWN -2	
DESCRIPTION: ASSEMBLY - O.H. CONVEYOR BASE CHAIN		**MAKE AS:**	**QTY**

ADCO where products meet packaging
2170 ACADEMY AVE
SANGER, CA 93657
INFO@ADCOMFG.COM
559.875.5563

DRAWN BY: N.S.	DATE: 02-20-15	SCALE: 1:3	
REFERENCE:	**DRAWING NUMBER:** **5624-10-008**	SHEET 1/1	SIZE A

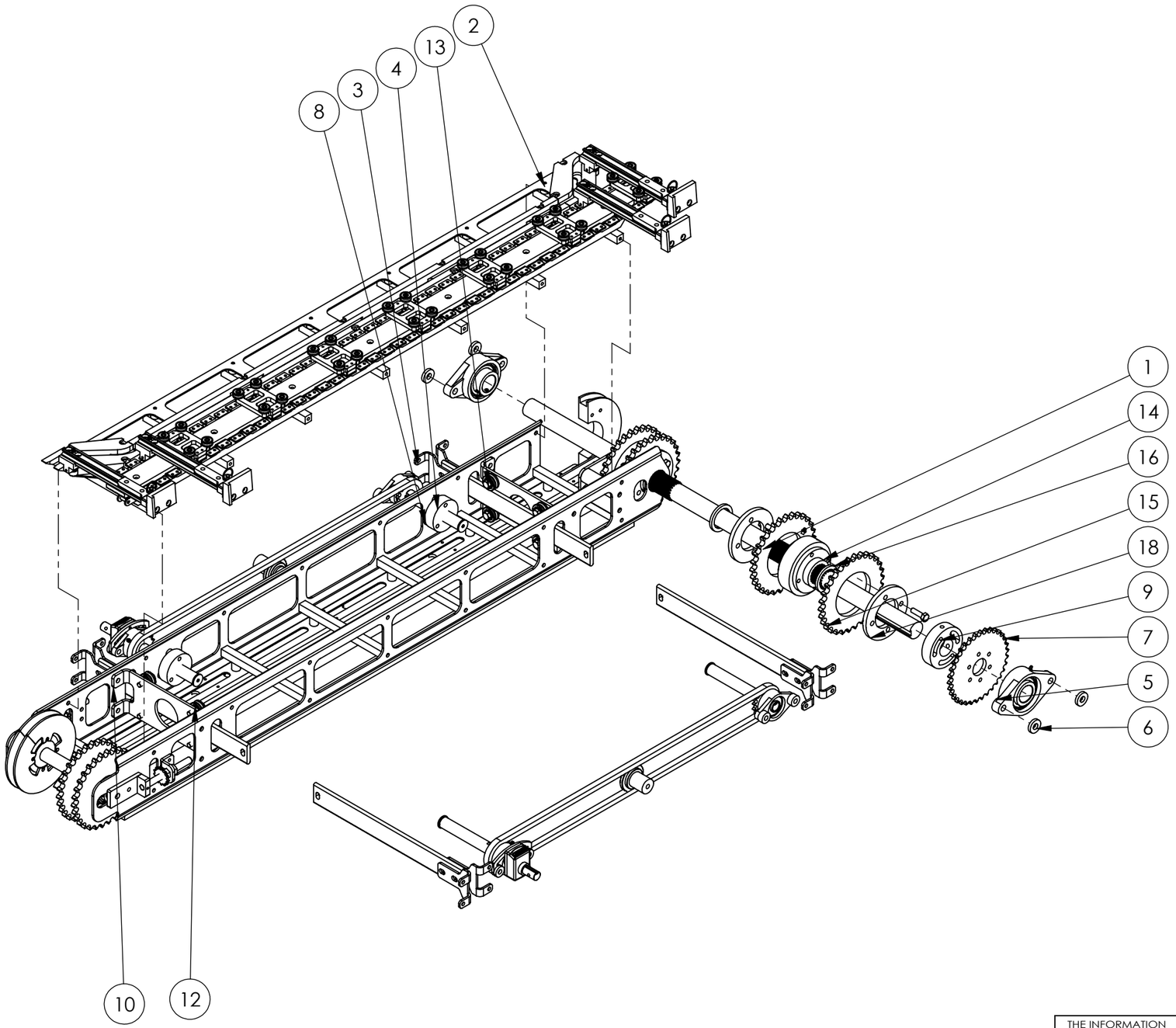

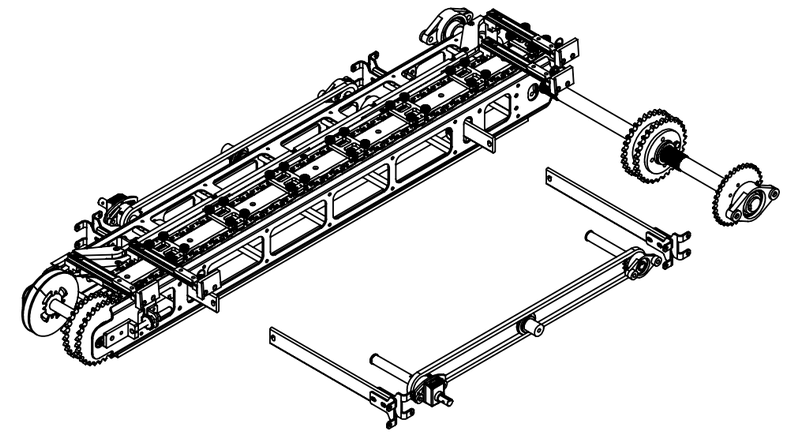

ITEM	PART NUMBER	DESCRIPTION	QTY
18	5624-11-126	PLATE - SPROCKET CLAMP	2
17	HARDWARE	GREASE ZERK - 1/4" UNF STRAIGHT	1
16	SPACER	A11-D-2.500-1.875-0.240-2-XX	2
15	5624-11-100	SPROCKET - BCL DRIVE	2
14	5624-11-127	HUB - ADJUSTABLE SPROCKET DRIVE	1
13	HARDWARE	BOLT - 10mm X 40mm LG SS HEX HEAD	10
12	ADCO #53608	ASSEMBLY - 52 ROLLER (WASHDOWN)	8
11	100-38-102	SPINDLE - SIZE 52 ROLLER	8
10	5624-11-139	ANGLE - BCL ROLLER SUPPORT	2
9	5624-11-141	HUB - BCL DRIVEN	1
8	SPACER	A09-S-0.750-0.344-0.250	6
7	5624-11-142	SPROCKET - BCL DRIVEN	1
6	SPACER	A09-S-1.250-0.547-0.250	4
5	ADCO#	IPTCI, 2 HOLE BEARING - #SUCTFL 208 40MM	2
4	5624-11-140	BLOCK - SIDE ADJUST	2
3	5624-11-012	ASSEMBLY - SLEEVE TRANSFER	1
2	5624-11-007	BLOSING BCL SIDE, ASSEMBLY	1
1	5624-11-124	SHAFT - BCL CLOSE	1

THE INFORMATION CONTAINED IN THIS DRAWING IS THE SOLE PROPERTY OF ADCO MFG. ANY REPRODUCTION IN PART OR WHOLE WITHOUT THE WRITTEN PERMISSION OF ADCO MFG IS PROHIBITED.

10/11

ASSEMBLY - CLOSING BCL

ADCO
2170 ACADEMY AVE
SANGER, CA 93657
INFO@ADCOMFG.COM
559.875.5563

DRAWN BY: JJR
DATE: 02-16-15
SCALE: 1:10
REFERENCE:
DRAWING NUMBER: 5624-11-001
SHEET 1/1
SIZE B

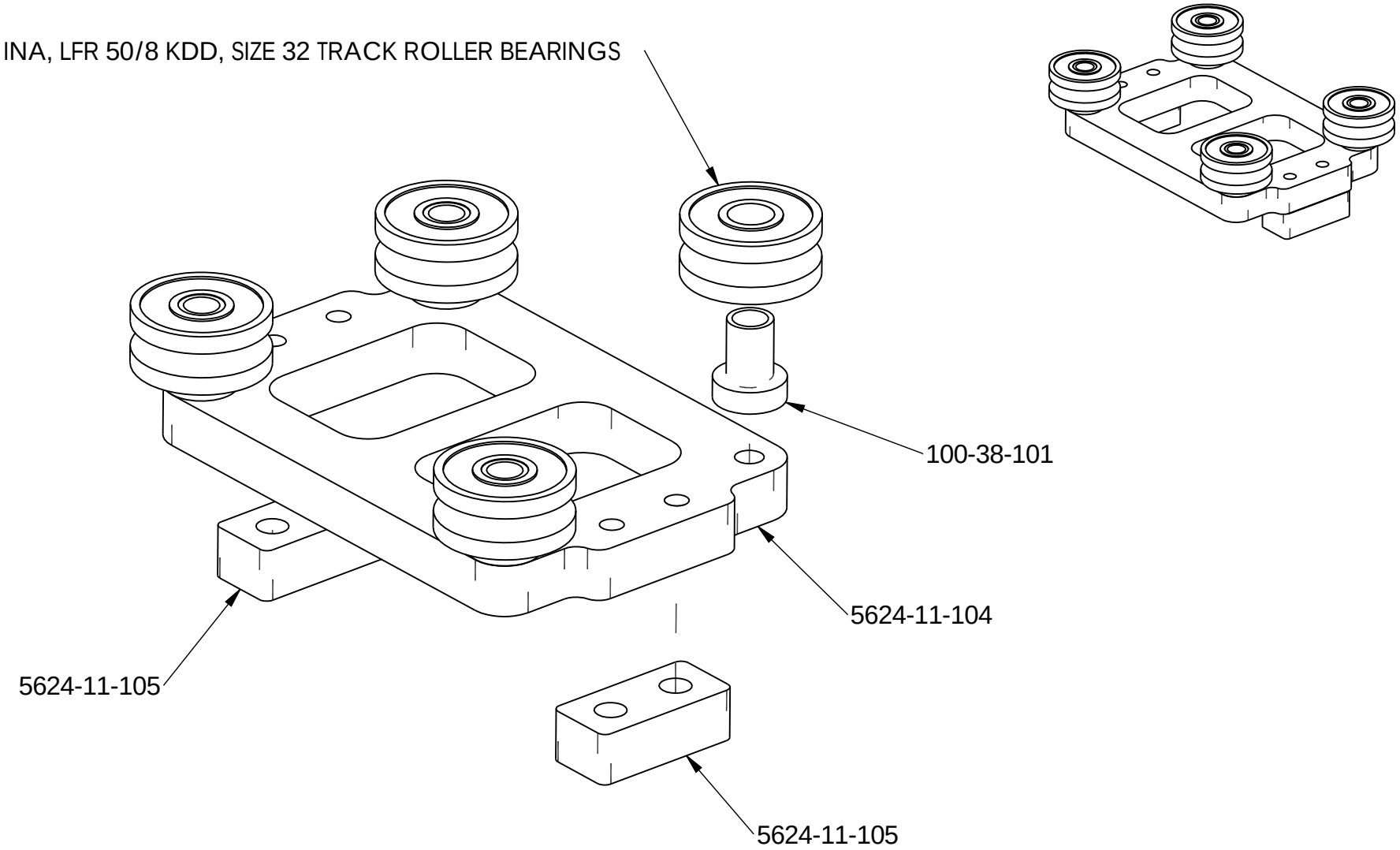

MFG NOTE: BREAK ALL SHARP CORNERS & EDGES

THE INFORMATION CONTAINED IN THIS DRAWING IS THE SOLE PROPERTY OF ADCO MANUFACTURING. ANY REPRODUCTION IN PART OR WHOLE WITHOUT THE WRITTEN PERMISSION OF ADCO MANUFACTURING IS PROHIBITED.

8/13

MATERIAL:	TOLERANCES: 1/16" ± 1/64" .00 ± .01 .000 ± .005 .0000 ± .0005 1° ± 10'	OPPOSITE -3	
		SHOWN -2	
DESCRIPTION: ASSEMBLY - LINEAR ROLLERS		**MAKE AS:**	**QTY**

ADCO where products meet packaging
2170 ACADEMY AVE
SANGER, CA 93657
INFO@ADCOMFG.COM
559.875.5563

DRAWN BY: N.S.	DATE: 03-24-15	SCALE: 1:1	
REFERENCE: -	**DRAWING NUMBER:** **5624-11-002**	SHEET 1/1	SIZE A

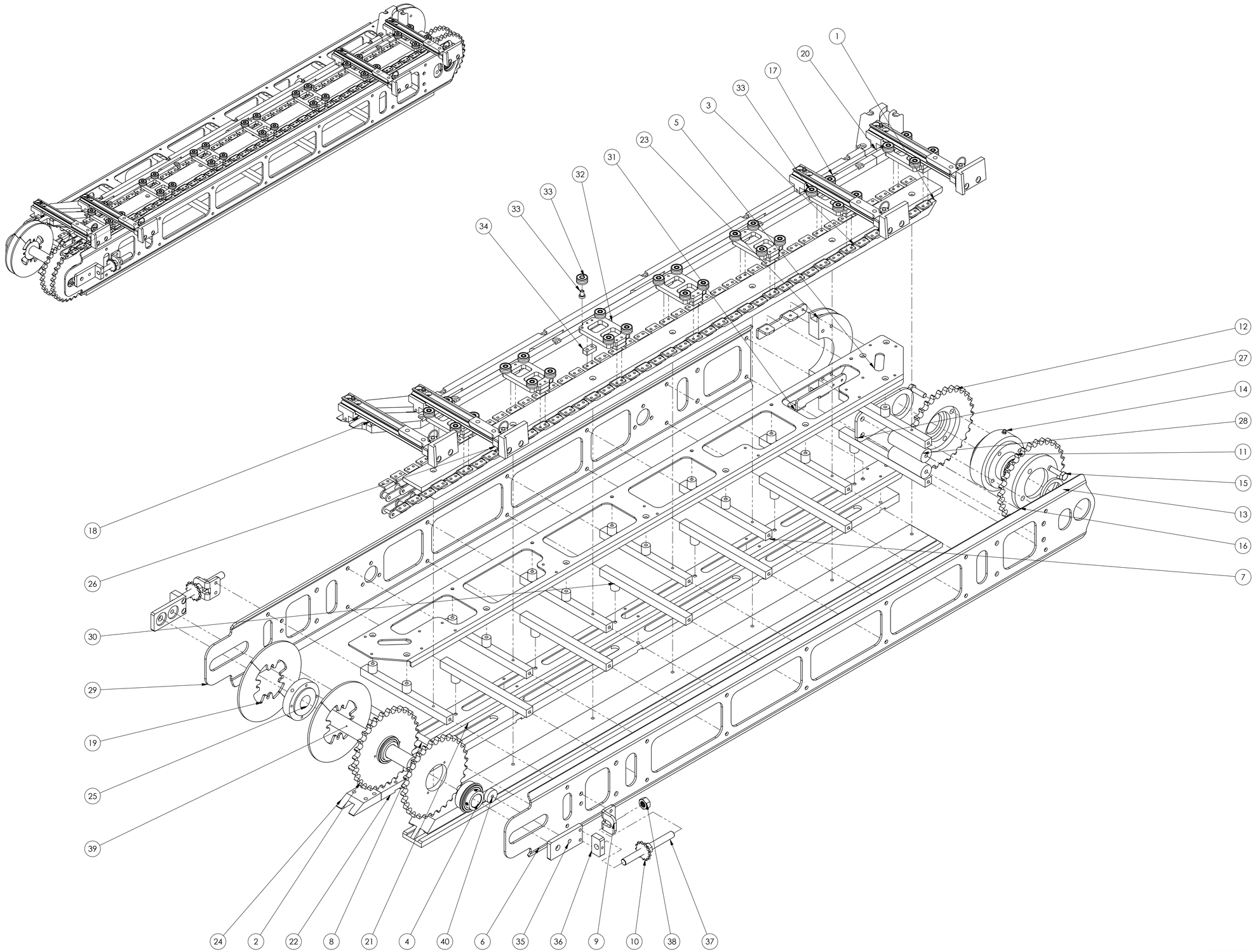

ITEM	PART NUMBER	DESCRIPTION	QTY
40	SHAFT	M16-25-0.375-M8	2
39	5624-11-113	SHAFT - IDLER	1
38	HARDWARE	HEX NUT, S.S. - 14MM	2
37	830-09-126	SHAFT - T.U. ADJUSTER ALL THREAD	2
36	5624-11-112	BLOCK - PROD. CONV T.U. SCREW	2
35	5624-11-111	BLOCK - CONVEYOR IDLER SLIDER	2
34	5624-11-105	BLOCK - ROLLER PLATE SPACER	14
33	100-38-001	ASSEMBLY - SIZE 32 NON-WD INA ROLLER	28
32	5624-11-104	PLATE - ROLLER MOUNT	7
31	5624-11-106	ANGLE - RETURN TRACK MOUNT	2
30	SPACER	A09-S-0.750-0.266-0.788	21
29	5624-11-136-2	ANGLE - OUTSIDE PLATE	1
28	SPACER	M10-S-1.250-M10-3.875-M10	2
27	5624-11-135	PLATE - SLIDING HUB CAPT	1
26	5624-11-009	ASSEMBLY - CLOSING ARM	4
25	5624-11-134	HUB - CAM IDLE GUIDE	1
24	5624-11-128	CAM - TRACK ENTRY	1
23	5624-11-131	GUIDE - CAM @ DRIVE	1
22	5624-11-133	TRACK - RETURN CAM	1
21	5624-11-132-2	ANGLE - RETURN TRACK MOUNT	1
20	5624-11-130	PLATE - CAM OUT PULL	1
19	5453-03-102	PLATE - CAM IDLE GUIDE	4
18	5624-11-129	PLATE - CAM IN PUSH	1
17	5624-11-123	TRACK - RETURN	1
16	5624-11-126	PLATE - SPROCKET CLAMP	2
15	HARDWARE	BOLT - 10mm X 40mm LG SS HEX HEAD	2
14	HARDWARE	GREASE ZERK - 1/4" UNF STRAIGHT	1
13	SPACER	A11-D-2.500-1.875-0.240-2-XX	2
12	5624-11-100	SPROCKET - BCL DRIVE	2
11	5624-11-127	HUB - ADJUSTABLE SPROCKET DRIVE	1
10	5624-11-110	SPCKET - IDLER ADJUST	2
9	5624-11-114	ANGLE - IDLER BACKUP	2
8	5624-11-137	BAR - LOWER CROSSMEMBER	7
7	5624-11-109	BAR - CROSSMEMBER	7
6	5624-11-108-2	ANGLE - BCL INSIDE	1
5	5624-11-107-2	ANGLE - CAM TRACK MOUNT	1
4	ADCO#	IPTCL INSERT BEARING - SSER206 30MM	2
3	ADCO# 48792	HKK, ADC-060-R-A2-EV, ADCLA C-2060H X2 ATTACHMENT ROLLER CHAIN (A2 A1 EVERY PITCH).	2
2	5624-11-102	SPROCKET - BCL IDLER	2
1	5624-11-103	RAIL - BCL CHAIN	2

THE INFORMATION CONTAINED IN THIS DRAWING IS THE SOLE PROPERTY OF ADCO MFG. ANY REPRODUCTION IN PART OR WHOLE WITHOUT THE WRITTEN PERMISSION OF ADCO MFG IS PROHIBITED.

CLOSING BCL SIDE, ASSEMBLY

ADCO
2170 ACADEMY AVE
HANGER, CA 93657
INFO@ADCOMFG.COM
559.875.5563

DRAWN BY: JJR	DATE: 2/17/15	SCALE: 1:4
REFERENCE: -	DRAWING NUMBER: 5624-11-007	SHEET 1/1 SIZE D

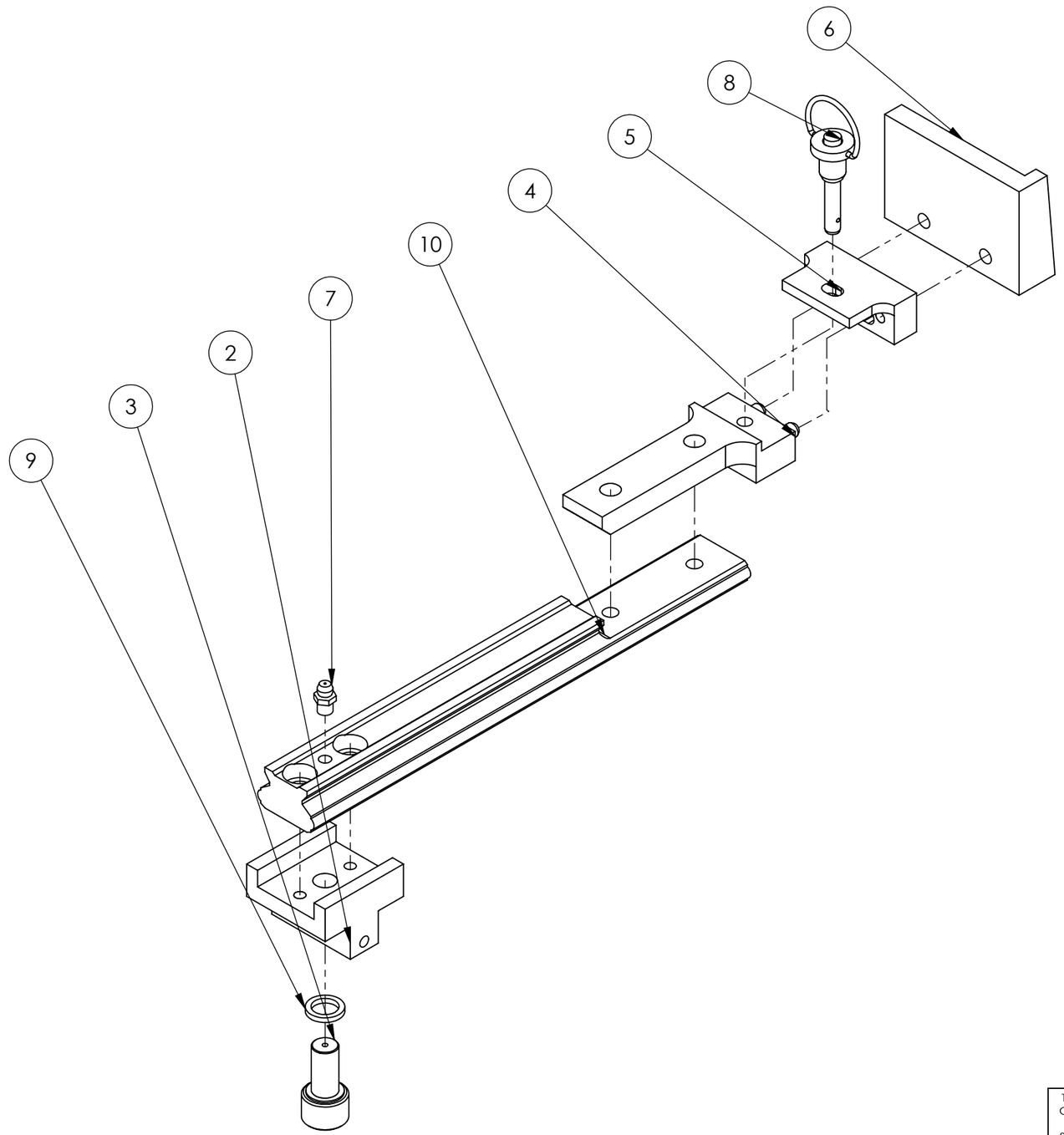

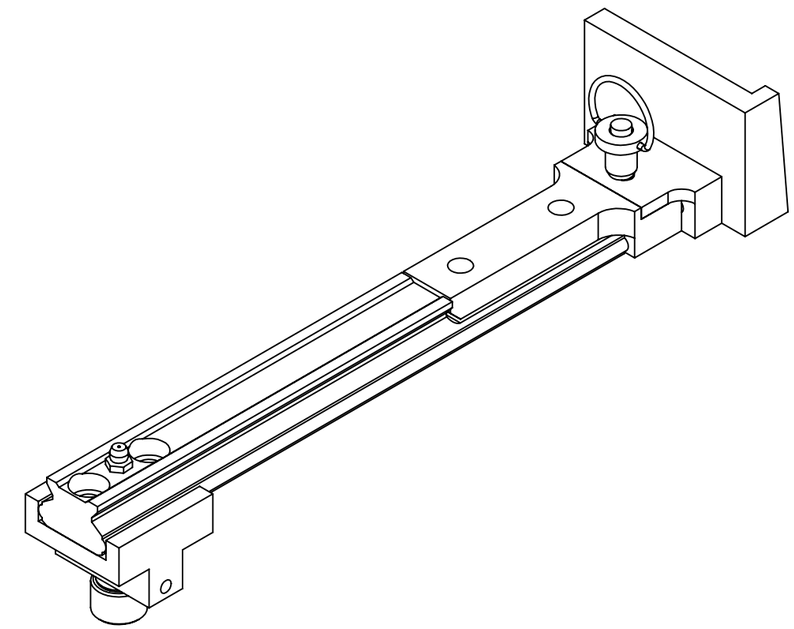

ITEM	PART NUMBER	DESCRIPTION	QTY
10	5624-11-143	TRACK - BCL CLOSE RUNNER	1
9	SPACER	A09-S-0.625-0.438-0.090	1
8	ADCO#	REID TOOL SMP-60 QUICK RELEASE PIN	1
7	HARDWARE	GREASE ZERK - 1/4" UNF STRAIGHT	1
6	5624-11-121	PLATE - PRODUCT PUSHER	1
5	5624-11-120	MOUNT - PUSHER	1
4	5624-11-118	MOUNT - PUSHER	1
3	ADCO#47726	CAM FOLLOWER, CARTER, SCH-24-SB WASHDOWN	1
2	5624-11-116	BAR - CAM BEARING MOUNT	1
1	5624-11-119	RAIL - BCL PUSHER	1

THE INFORMATION CONTAINED IN THIS DRAWING IS THE SOLE PROPERTY OF ADCO MFG. ANY REPRODUCTION IN PART OR WHOLE WITHOUT THE WRITTEN PERMISSION OF ADCO MFG IS PROHIBITED.

ASSEMBLY - CLOSING ARM

ADCO
2170 ACADEMY AVE
SANGER, CA 93657
INFO@ADCOMFG.COM
559.875.5563

DRAWN BY: JJR
DATE: 2/17/15
SCALE: 1:2
REFERENCE: -
DRAWING NUMBER: 5624-11-009
SHEET 1/1
SIZE B

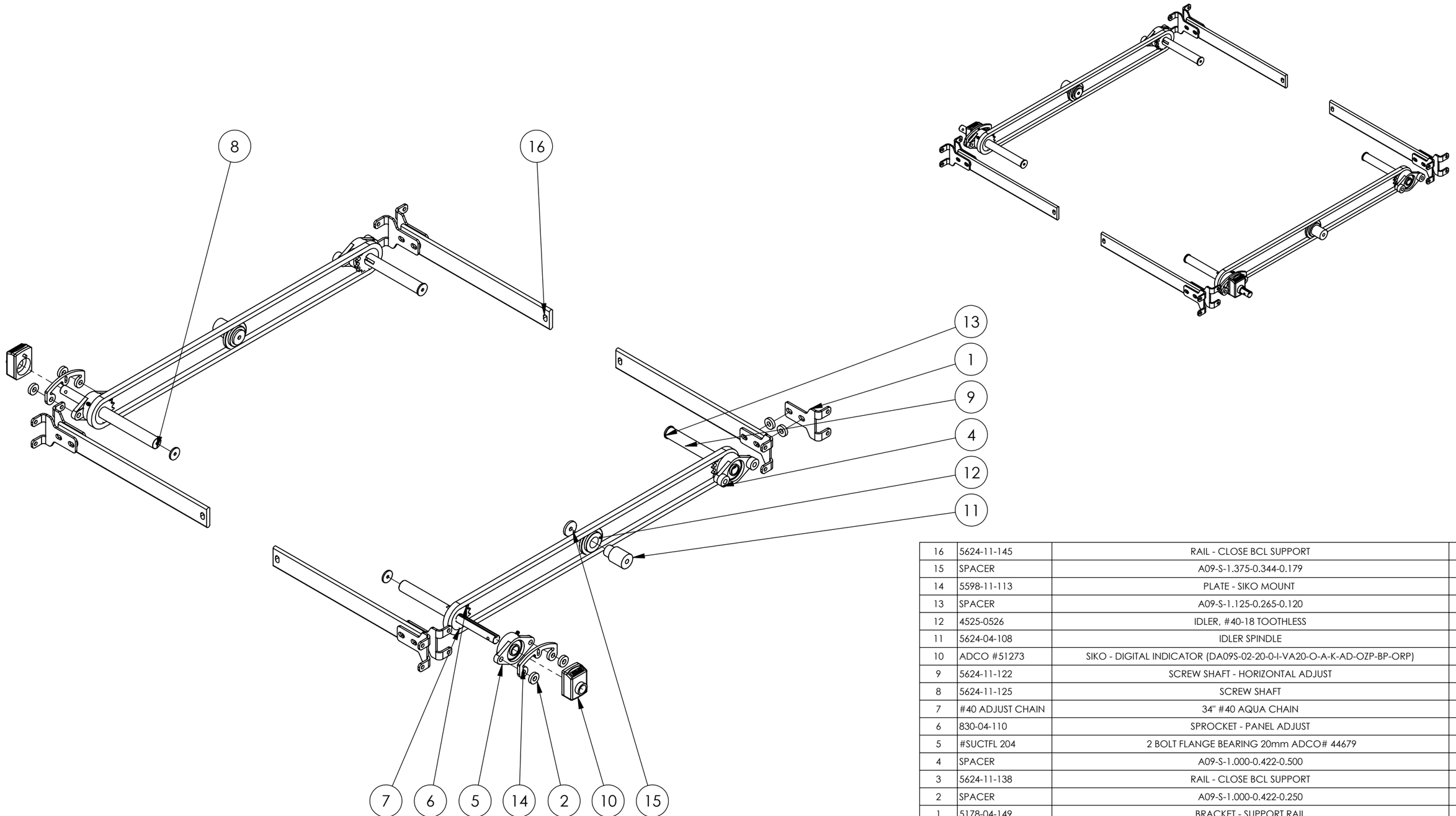

ITEM	PART NUMBER	DESCRIPTION	QTY
16	5624-11-145	RAIL - CLOSE BCL SUPPORT	4
15	SPACER	A09-S-1.375-0.344-0.179	2
14	5598-11-113	PLATE - SIKO MOUNT	2
13	SPACER	A09-S-1.125-0.265-0.120	4
12	4525-0526	IDLER, #40-18 TOOTHLESS	2
11	5624-04-108	IDLER SPINDLE	2
10	ADCO #51273	SIKO - DIGITAL INDICATOR (DA09S-02-20-0-I-VA20-O-A-K-AD-OZP-BP-ORP)	2
9	5624-11-122	SCREW SHAFT - HORIZONTAL ADJUST	2
8	5624-11-125	SCREW SHAFT	2
7	#40 ADJUST CHAIN	34" #40 AQUA CHAIN	2
6	830-04-110	SPROCKET - PANEL ADJUST	4
5	#SUCTFL 204	2 BOLT FLANGE BEARING 20mm ADCO# 44679	4
4	SPACER	A09-S-1.000-0.422-0.500	4
3	5624-11-138	RAIL - CLOSE BCL SUPPORT	1
2	SPACER	A09-S-1.000-0.422-0.250	20
1	5178-04-149	BRACKET - SUPPORT RAIL	8

THE INFORMATION CONTAINED IN THIS DRAWING IS THE SOLE PROPERTY OF ADCO MFG. ANY REPRODUCTION IN PART OR WHOLE WITHOUT THE WRITTEN PERMISSION OF ADCO MFG IS PROHIBITED.

10/11

ASSEMBLY - SLEEVE TRANSFER

ADCO
2170 ACADEMY AVE
SANGER, CA 93657
INFO@ADCOMFG.COM
559.875.5563

DRAWN BY: JJR
DATE: 2/17/15
SCALE: 1:8
REFERENCE: 5598-04-001
DRAWING NUMBER: **5624-11-012**
SHEET 1/1
SIZE B

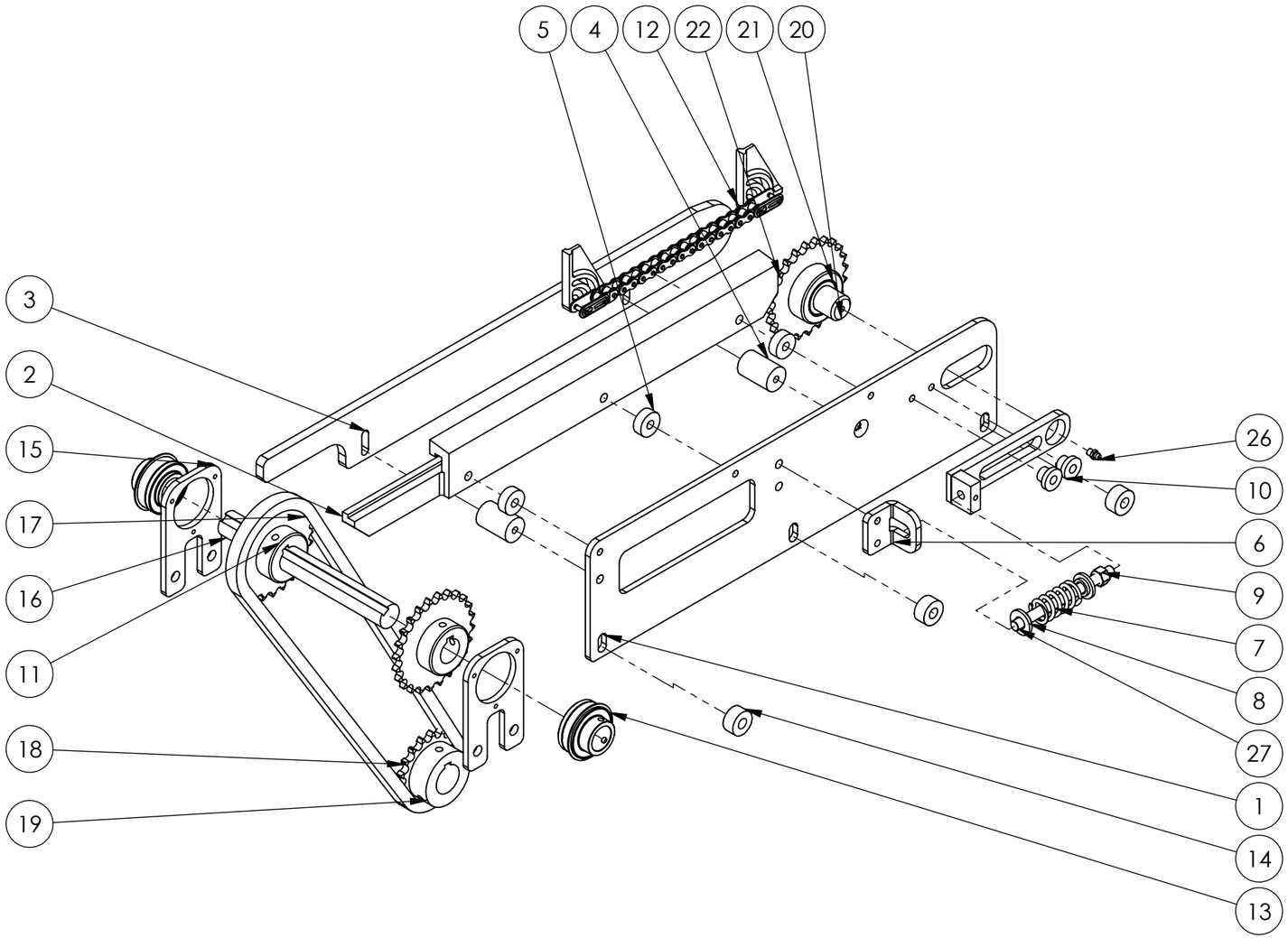

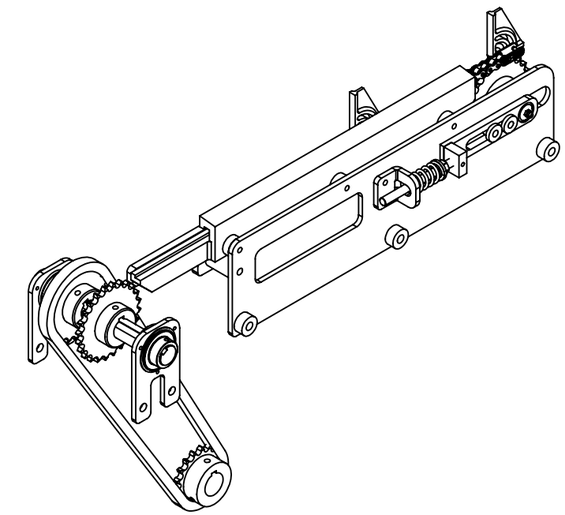

ITEM	PART NUMBER	DESCRIPTION	QTY
27	5624-12-113	BOLT - CARTON ADJUST	1
26	HARDWARE	GREASE ZERK - 1/4" UNF STRAIGHT	1
25	5624-12-112	PLATE - DRIVE CAPT.	1
24	5178-12-116	SPACER - IDLER LUBE	1
23	#RR-145-S	SPIROLOX INTERNAL RETAINING RING	2
22	5178-12-105	SPROCKET - SQ. CHAIN IDLER	1
21	ADCO# 45454	RADIAL BEARING - SKF SS61904-2RS1 - 20MM ID X 37MM OD X 9MM WIDE	2
20	5624-12-108	WELDMENT - SQ. CHAIN TAKEUP	1
19	5624-12-117	HUB - SQUARING DRIVE	1
18	5624-12-116	SPROCKET - SQ CHAIN DRIVE	1
17	#40 ADJUST CHAIN	34" #40 AQUA CHAIN	1
16	5624-12-115	SHAFT - SQ. CHAIN DRIVE	1
15	5624-12-102	PLATE - BEARING MOUNT	2
14	5624-12-114	SPACER - MAIN PLATE MOUNT	3
13	#SSER205	BEARING - IPTCI 25mm INSERT	2
12	5426-12-104	ASSY - SQUARING CHAIN (7 @ 9" = 63")	1
11	5178-12-115	SPROCKET - SQUARING CHAIN DRIVE	2
10	5178-12-113	SPACER - SQ. CHAIN IDLER CAPT.	2
9	HARDWARE	NUT - 10mm SS HEX	1
8	5624-12-106	BUSHING - SPRING END	2
7	S-3033	SPRING - COMPRESSION	1
6	5624-12-101	ANGLE - IDLER BACKUP	1
5	5624-12-105	SPACER - CHAIN RUNNER MNT	3
4	5624-12-104	316 SPACER - HARKES RUNNER	2
3	5426-12-106	PLATE - HARKESS SRUNNER	1
2	5426-12-105	GUIDE - SQ. CHAIN RUNNER	1
1	5624-12-100	PLATE - SQ. CHAIN MAIN MOUNT	1

THE INFORMATION CONTAINED IN THIS DRAWING IS THE SOLE PROPERTY OF ADCO MFG. ANY REPRODUCTION IN PART OR WHOLE WITHOUT THE WRITTEN PERMISSION OF ADCO MFG IS PROHIBITED.

10/11

ASSEMBLY - SQ CHAIN

ADCO
2170 ACADEMY AVE
SANGER, CA 93657
INFO@ADCOMFG.COM
559.875.5563

DRAWN BY: JJR | DATE: 2/17/15 | SCALE: 1:5

REFERENCE: - | DRAWING NUMBER: **5624-12-002** | SHEET 1/1 | SIZE B

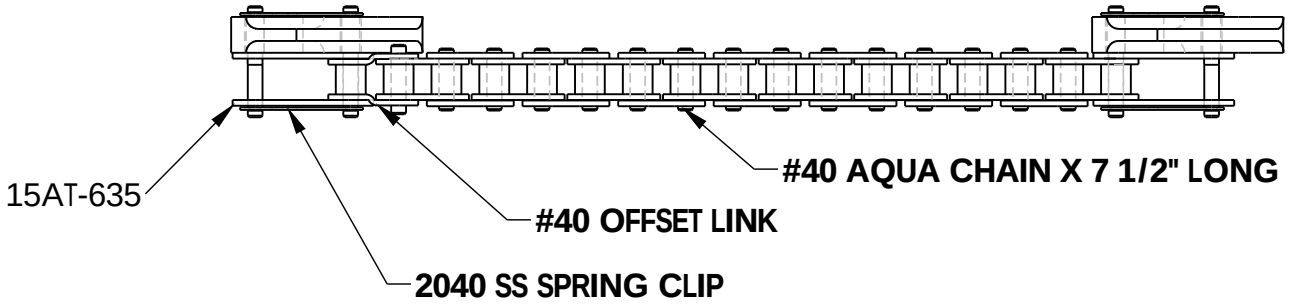

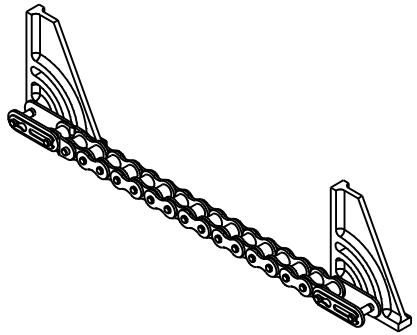

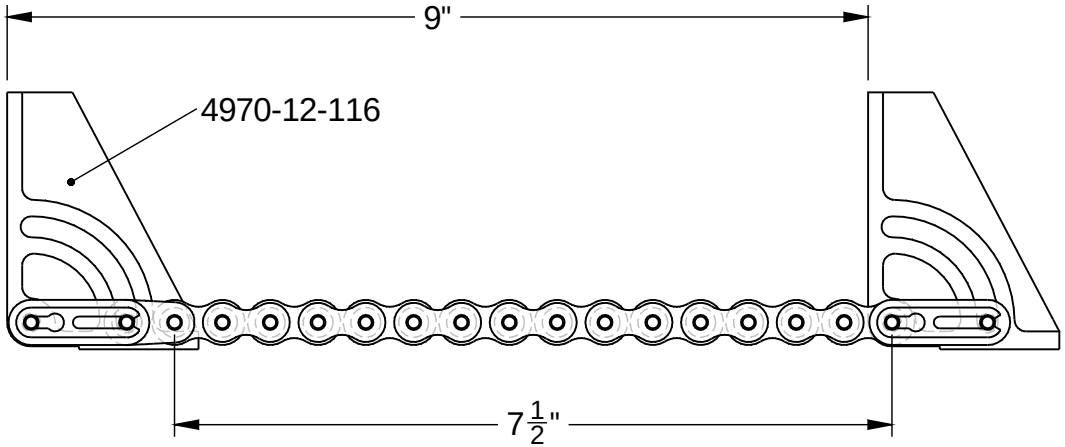

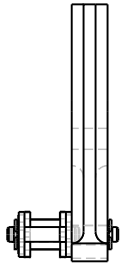

ONE FLIGHT SHOWN - 7 FLIGHTS REQUIRED
7 FLIGHTS @ 9" CENTERS = 63" LONG CHAIN

MFG NOTE: BREAK ALL SHARP CORNERS & EDGES

THE INFORMATION CONTAINED IN THIS DRAWING IS THE SOLE PROPERTY OF ADCO MANUFACTURING. ANY REPRODUCTION IN PART OR WHOLE WITHOUT THE WRITTEN PERMISSION OF ADCO MANUFACTURING IS PROHIBITED. 10/11

MATERIAL: SEE NOTES	TOLERANCES: 1/16" ± 1/64" .00 ± .01 .000 ± .005 .0000 ± .0005 1° ± 10'	OPPOSITE -3	
		SHOWN -2	
DESCRIPTION: ASSY - SQUARING CHAIN (7 @ 9" = 63")		**MAKE AS:**	**QTY**

ADCO
2170 ACADEMY AVE
SANGER, CA 93657
INFO@ADCOMFG.COM
559.875.5563

DRAWN BY: RAS	DATE: 12/17/12	SCALE: 1:4	
REFERENCE: 5178-12-101	**DRAWING NUMBER: 5426-12-104**	SHEET 1/1	SIZE A

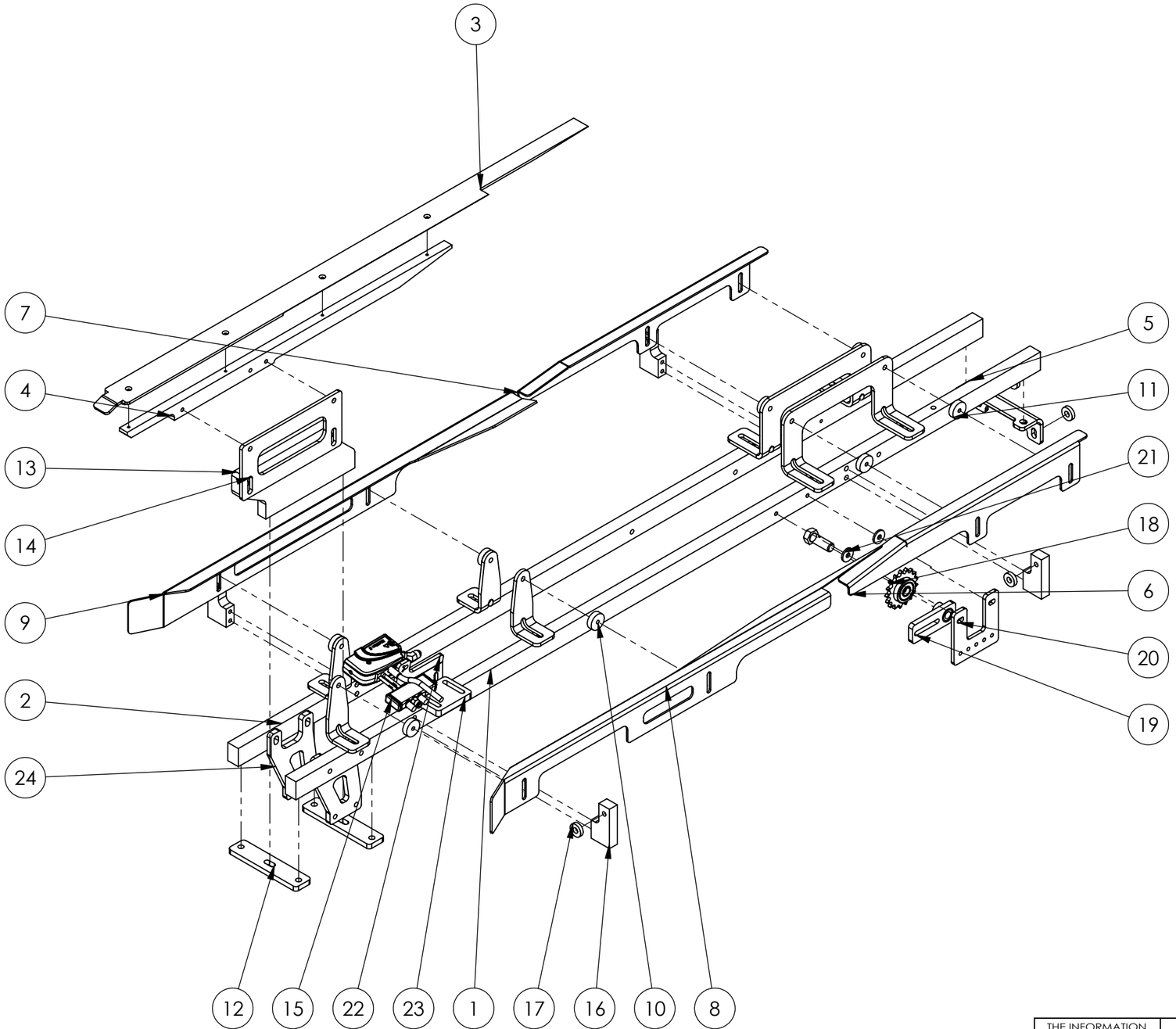

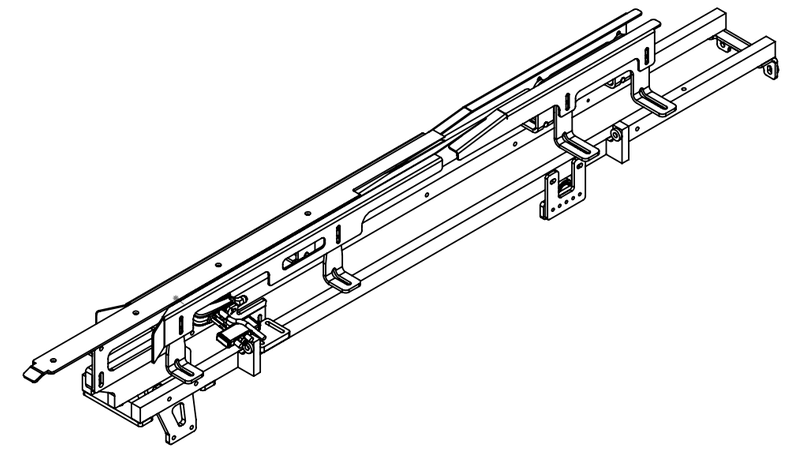

ITEM	PART NUMBER	DESCRIPTION	QTY
24	5624-13-119	PLATE - CLOSING SECTION MOUNT	2
23	5598-13-113	BLOCK - GLUE GUN MOUNT	1
22	5598-13-112	ANGLE - GLUE GUN MOUNT	1
21	SPACER	A09-S-1.000-0.344-0.121	2
20	5624-12-119	PLATE - IDLER MOUNT	1
19	IDLER BRACKET	A26-1.000	1
18	100-05-001	ASSEMBLY - #40-17T IDLER (WASHDOWN)	1
17	SPACER	A09-S-1.000-0.422-0.250	6
16	5624-12-118	BAR - CLOSING INA TRACK MNT	4
15	ADCO#	NORDSON GLUE GUN, MINI BLUE, MB2	1
14	5624-13-116	PLATE - LOWER TRANSFER MOUNT	1
13	5598-13-102	PLATE - BOTTOM TRANSFER MOUNT BRACE	1
12	5624-13-115	CROSSBAR SUPPORT FOR TOUNGE	2
11	5624-13-111	WELDMENT - COMPRESSION PLOW MOUNT	2
10	5624-13-108	WELDMENT - CLOSING PLOW MOUNT	4
9	5624-13-107	CHANNEL - LONG FLAP CLOSING PLOW	1
8	5624-13-106	CHANNEL - SHORT FLAP CLOSING PLOW	1
7	5624-13-105	CHANNEL - COMPRESSION PLOW L/H	1
6	5624-13-104	CHANNEL - COMPRESSION PLOW R/H	1
5	5624-13-103	ANGLE - CLOSING BAR SUPPORT	1
4	5598-13-104	BAR - TRANSFER PLATE MOUNT	1
3	5598-13-110	PLATE - PRODUCT TRANSFER TOUNGE	1
2	5624-13-101	BAR - CLOSING MAIN SUPPORT	1
1	5624-13-100	BAR - CLOSING SEC. MAIN SUPPORT	1

THE INFORMATION CONTAINED IN THIS DRAWING IS THE SOLE PROPERTY OF ADCO MFG. ANY REPRODUCTION IN PART OR WHOLE WITHOUT THE WRITTEN PERMISSION OF ADCO MFG IS PROHIBITED.

10/11

ASSEMBLY - CLOSING PLOWS

ADCO
2170 ACADEMY AVE
SANGER, CA 93657
INFO@ADCOMFG.COM
559.875.5563

DRAWN BY: JJR
DATE: 2/17/15
SCALE: 1:8
REFERENCE: -
DRAWING NUMBER: 5624-13-003
SHEET 1/1
SIZE B

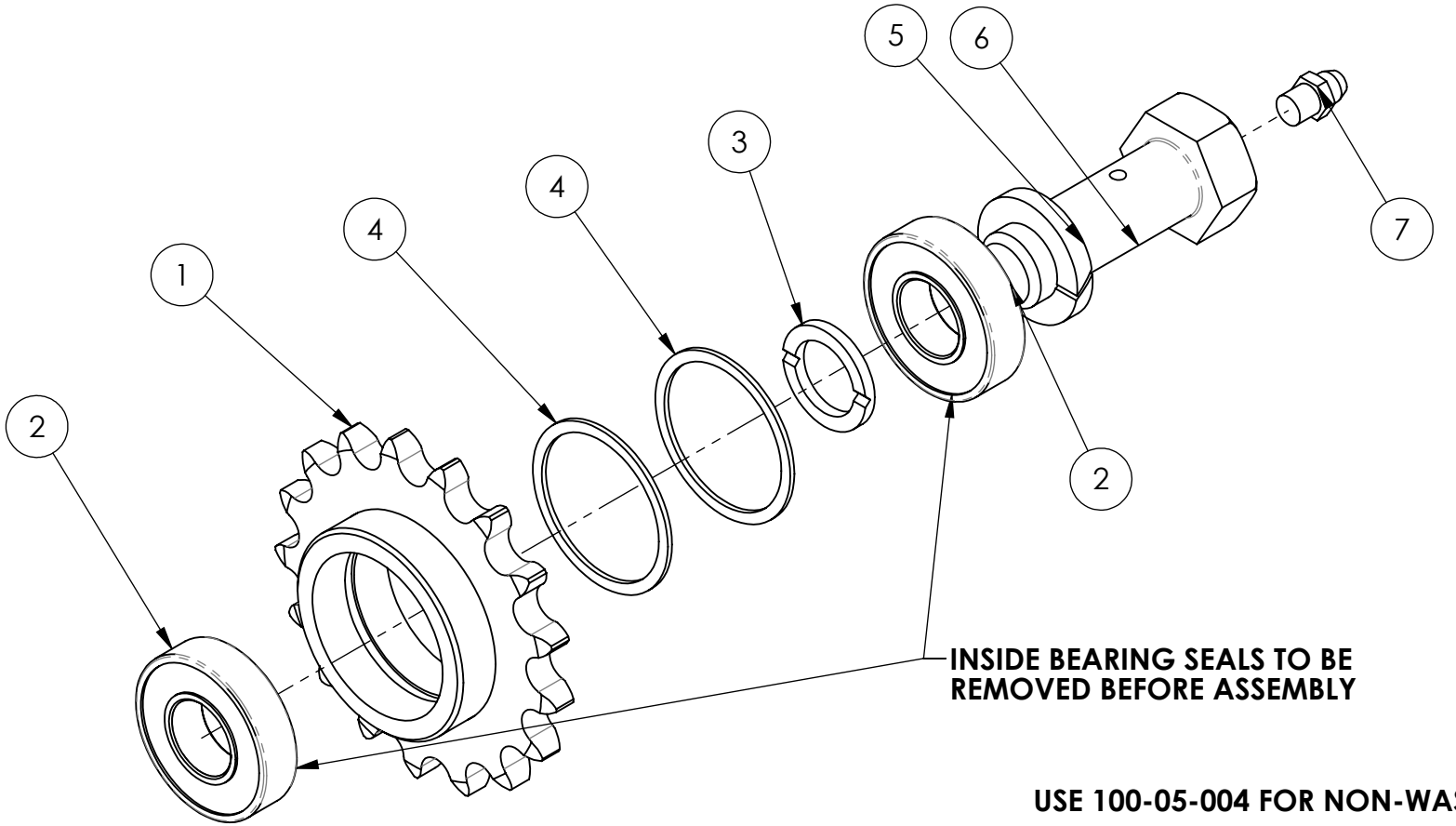

USE 100-05-004 FOR NON-WASHDOWN

ITEM NO.	PartNo	DESCRIPTION	QTY.
7	HARDWARE	GREASE ZERK - 1/4" UNF STRAIGHT	1
6	100-05-116	BOLT - IDLER LUBE	1
5	HARDWARE	WASHER - 5/8" SS LOCK	1
4	ADCO #39646	RETAINING RING - SPIROLOX #RR-137-S	2
3	100-05-115	SPACER - IDLER LUBE	1
2	ADCO#39090	MRC #R-10ZZ ST, INSERT BEARING - Ø 5/8" I.D. x 1-3/8" O.D. x 11/32" W	2
1	100-05-101	WELDMENT - #40-17T IDLER (WASHDOWN)	1

10/11

ASSEMBLY - #40-17T IDLER (WASHDOWN)

ADCO
2170 ACADEMY AVE
SANGER, CA 93657
INFO@ADCOMFG.COM
559.875.5563

DRAWN BY: JJV | DATE: 1/9/09 | SCALE: 3:4

REFERENCE:

DRAWING NUMBER: **100-05-001**

SHEET 1/1 | SIZE A

THE INFORMATION CONTAINED IN THIS DRAWING IS THE SOLE PROPERTY OF ADCO MANUFACTURING. ANY REPRODUCTION IN PART OR WHOLE WITHOUT WRITTEN PERMISSION OF ADCO MFG IS PROHIBITED.

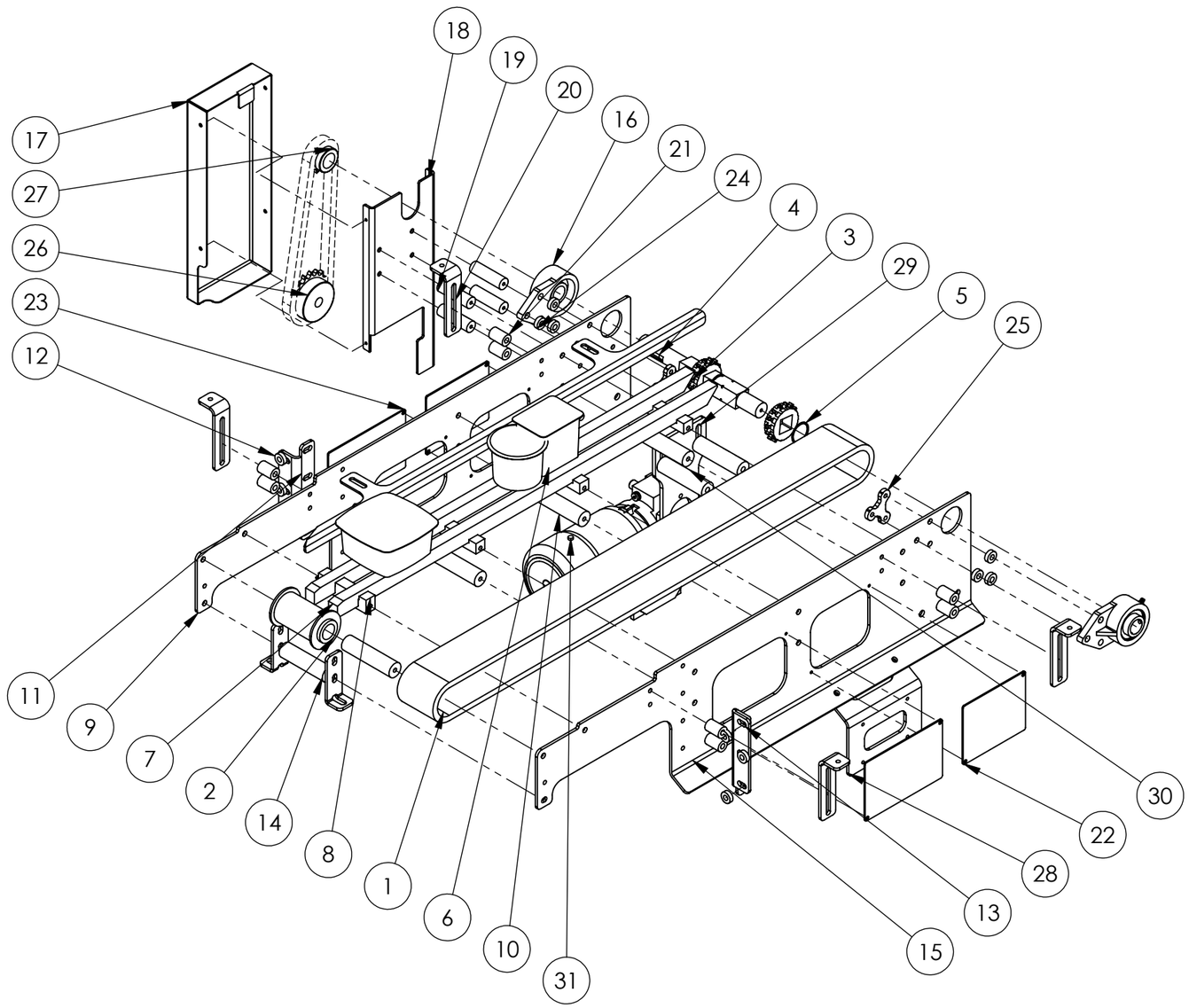

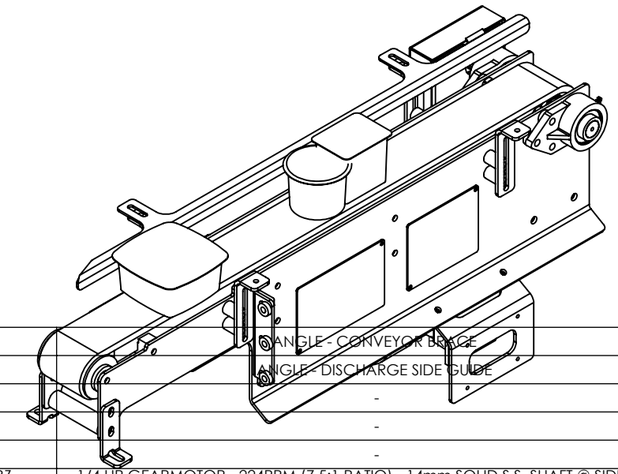

ITEM	PART NUMBER	DESCRIPTION	QTY
36	5624-14-103	ANGLE - CONVEYOR BRACE	2
35	5624-14-102	ANGLE - DISCHARGE SIDE GUIDE	1
34	-	-	1
33	-	-	1
32	-	-	1
31	SK1SMID31VBZ-63L/4	1/4 HP GEARMOTOR - 224RPM (7.5:1 RATIO) - 14mm SOLID S.S. SHAFT @ SIDE B - B14 FLANGE, "M3" MOUNTING - NSD+ PAINT - 230/460V-60Hz,	1
30	SPACER	M10-S-1.000-M10-3.750-M10	2
29	5580-14-100	MOUNT - GEARMOTOR	1
28	5402-18-115	PLATE - FRL MOUNT FOR SMC#AC30-IEM02	1
27	SPROCKET	M01-S-401-12-25	1
26	SPROCKET	M01-S-401-20-14	1
25	5398-14-101	NUTPLATE - 3 HOLE FLANGE BEARING	2
24	SPACER	A09-S-0.750-0.344-0.250 (bearing mount)	6
23	5304-16-161	GUARD DISCHARGE CONV.	2
22	5304-16-160	GUARD DISCHARGE CONV.	2
21	SPACER	A09-S-0.750-0.344-1.125	8
20	5398-14-125	MOUNT - SIDE GUIDE	4
19	SPACER	M10-S-0.750-M6-2.500-M6	4
18	5228-14-122	MOUNT - CHAIN GUARD	1
17	5228-14-121	GUARD - CHAIN	1
16	#SUCTFB205	3 - BOLT FLANGE BEARING - Ø25mm	2
15	5398-14-102-2	WELDMENT - DISCHARGE CONVEYOR PANEL	1
14	SPACER	M10-1.000-M10-3.641-M10	1
13	5580-14-101	MOUNT - DISCHARGE CONVEYOR	1
12	SPACER	A09-S-0.750-0.344-0.250	6
11	5228-14-112	MOUNT - DISCHARGE CONVEYOR	1
10	5228-14-111	SHAFT - IDLE ROLLER	4
9	5398-14-100-2	WELDMENT - DISCHARGE CONVEYOR PANEL	1
8	5228-14-108	BAR - RUNNER ANCHOR	1
7	5228-14-109	RUNNER - DISCHARGE CONVEYOR	2
6	5228-14-107	BAR - RUNNER SUPPORT	3
5	RR90	RR-131	2
4	5398-14-114	SHAFT - CONVEYOR DRIVE	1
3	5178-25-113	PULLEY - CONVEYOR BELT DRIVE	2
2	5228-14-110	ROLLER - CONVEYOR IDLE	1
1	ADCO#	BELT - HABASIT #SM605 - 1/2" PITCH - 3" WIDE	1

THE INFORMATION CONTAINED IN THIS DRAWING IS THE SOLE PROPERTY OF ADCO MFG. ANY REPRODUCTION IN PART OR WHOLE WITHOUT THE WRITTEN PERMISSION OF ADCO MFG IS PROHIBITED.

10/11

ASSEMBLY - DISCHARGE CONVEYOR

ADCO
2170 ACADEMY AVE
SANGER, CA 93657
INFO@ADCOMFG.COM
559.875.5563

DRAWN BY: JJR	DATE: 2/17/15	SCALE: 1:8	
REFERENCE: 5598-14-001	DRAWING NUMBER: **5624-14-001**	SHEET 1/1	SIZE B

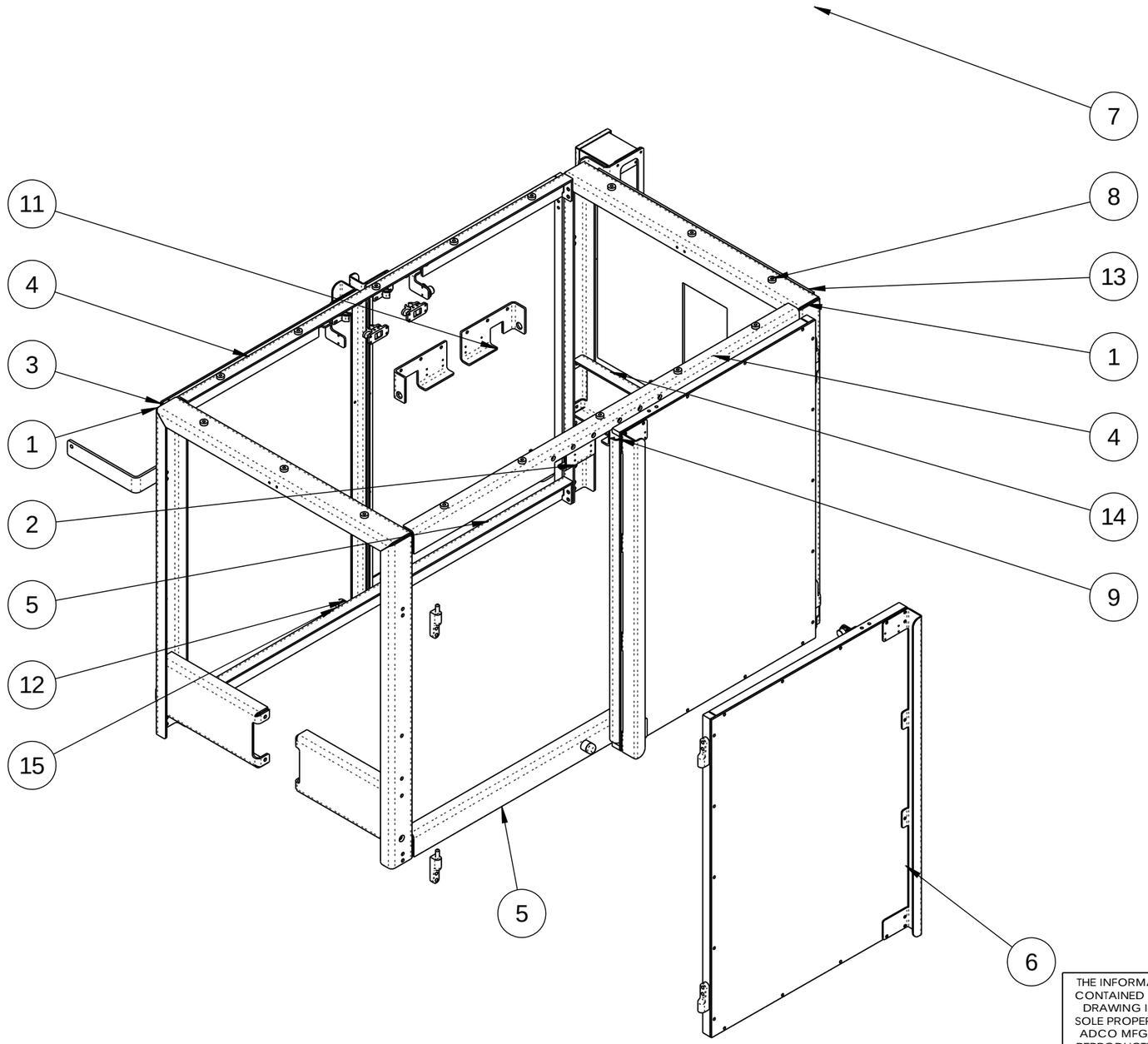

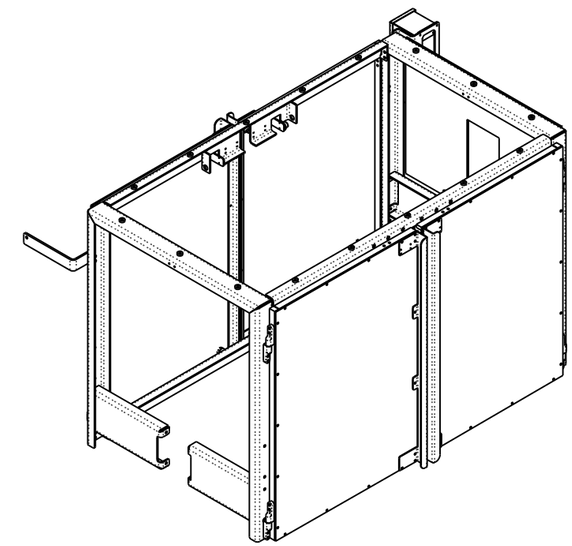

ITEM	PART NUMBER	DESCRIPTION	QTY
20	5624-16-103	ANGLE - INFEED GUARD BRACE	1
19	SPACER	A09-S-1.000-0.344-0.500	1
18	5624-18-113	ANGLE - REMOTE OP MOUNT	1
17			1
16	SPACER	A09-S-0.750-0.281-0.388	12
15	ADCO# 31925	BUMPER STOP - Mc Master Carr - 9541-K3	4
14	5624-16-192	CHANNEL - CAGE BOTTOM SUPPORT	4
13	5624-16-172	STARWHEEL GUARD - DOWNSTREAM	1
12	SPACER	A10-S-1.000-C3-0.688-C3	4
11	5426-16-136-3	MOUNT - DOOR SENSOR & PATCH	2
10	#3700	"WAM" LATCH, GUARD DOOR, PLASTIC	2
9	5426-16-136-2	MOUNT - DOOR SENSOR & CATCH	2
8	SPACER	A09-S-0.750-0.281-0.250	16
7	5624-16-189	TIMING SCREW TOP GUARD	1
6	5624-16-015	ASSEMBLY - RH UPSTREAM GUARD DOOR	2
5	5624-16-129	WELDMENT - TIMING SCREW CAGE LOWER SIDE ANGLE	2
4	5624-16-121-2	WELDMENT - TIMING SCREW CAGE UPPER SIDE ANGLE	2
3	5426-16-014	ASSEMBLY - RH UPSTREAM GUARD DOOR	2
2	100-39-108	HINGE, LOWER GUARD DOOR	8
1	5624-16-144	WELDMENT - STARWHEEL CAGE HOOP	2

THE INFORMATION CONTAINED IN THIS DRAWING IS THE SOLE PROPERTY OF ADCO MFG. ANY REPRODUCTION IN PART OR WHOLE WITHOUT THE WRITTEN PERMISSION OF ADCO MFG IS PROHIBITED.

10/11

ASSEMBLY - TIMING SCREW GUARDS

ADCO
2170 ACADEMY AVE
SANGER, CA 93657
INFO@ADCOMFG.COM
559.875.5563

DRAWN BY: CR	DATE: 02/23/15	SCALE: 1:12	
REFERENCE: 5426-16-003	DRAWING NUMBER: **5624-16-003**	SHEET 1/1	SIZE B

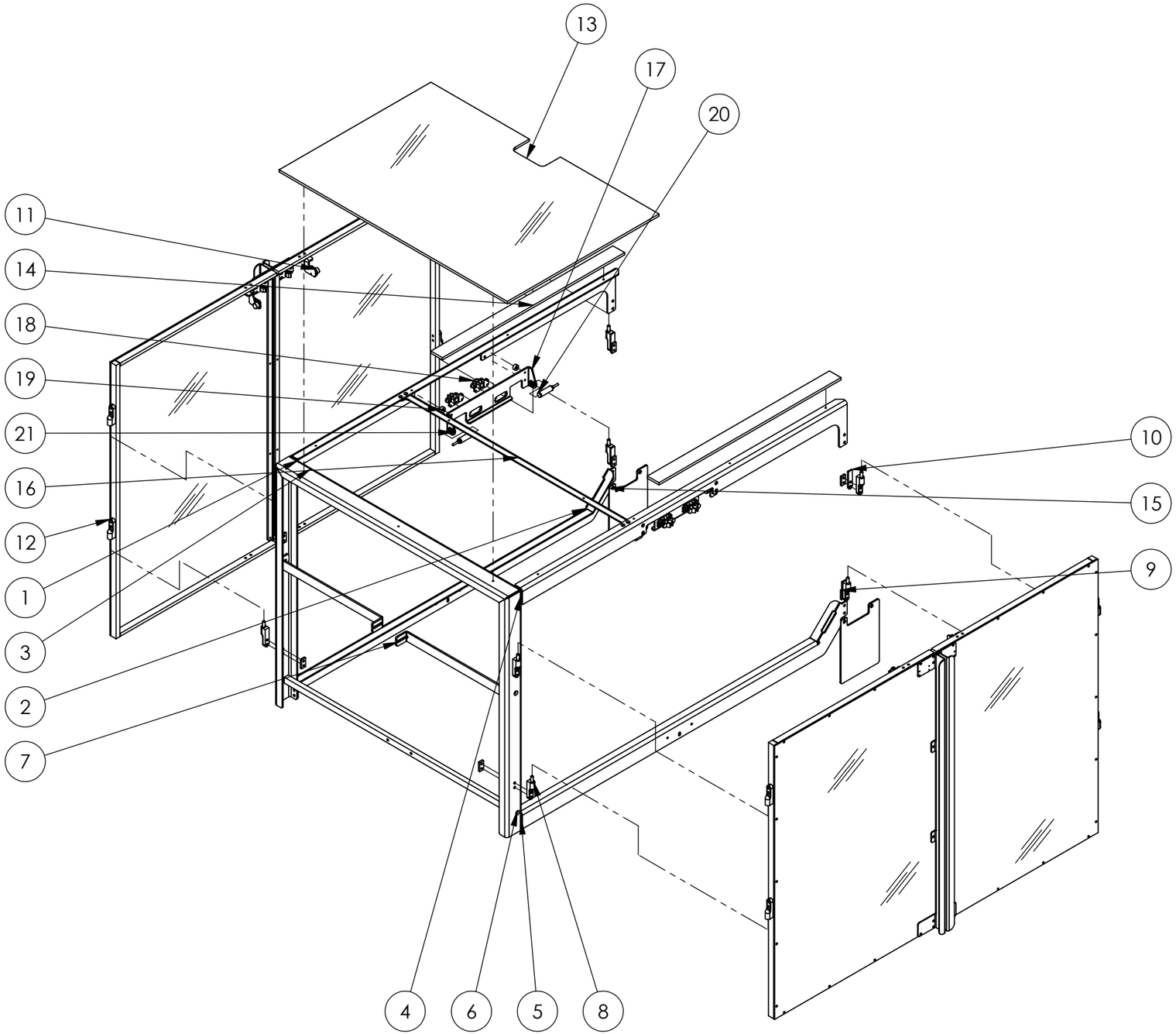

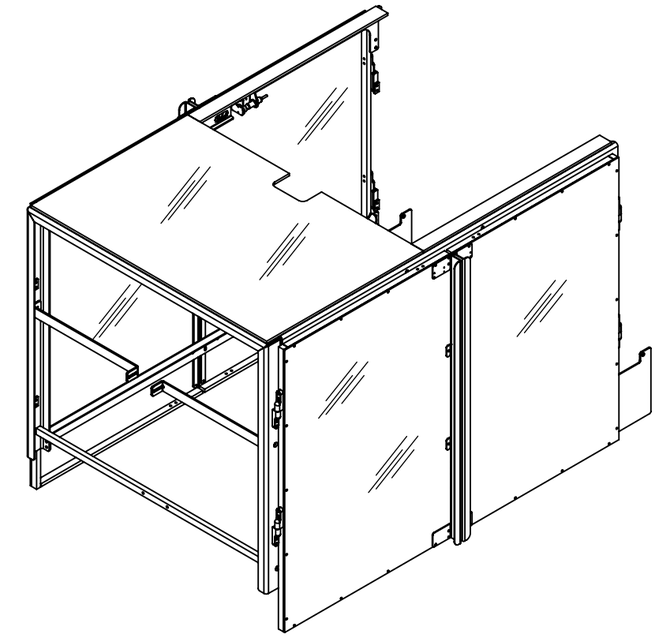

ITEM	PART NUMBER	DESCRIPTION	QTY
21	HARDWARE	NUT - 18MM SS HEX JAM	8
20	#440N-Z21S16H	SWITCH SENSAGUARD (18mm)	4
19	SPACER	A09-S-0.750-0.281-0.388	8
18	#3700	"WAM" LATCH, GUARD DOOR, PLASTIC	4
17	5624-16-227	MOUNT - DOOR SENSOR & PATCH	2
16	5624-16-234	ANGLE - LEXAN SUPPORT	1
15	5624-16-233	COVER - DOOR BOTTOM	2
14	5624-16-230	LEXAN - SIDE OF HOPPER	2
13	5624-16-229	LEXAN - BEHIND HOPPER	1
12	5579-16-005	ASSEMBLY - RH UPSTREAM GUARD DOOR	2
11	5579-16-004	ASSEMBLY - RH UPSTREAM GUARD DOOR	2
10	5402-16-143	PLATE - GUARD DOOR SPACER 7 GAUGE	4
9	NUTPLATE	M24-S-0.750-1.500-0.750-0.250-M8	8
8	100-39-108	HINGE, LOWER GUARD DOOR	8
7	5624-16-220	ANGLE - CAGE BRACE	2
6	5624-16-219	BAR - UPSTREAM CGAE SUPPORT	1
5	5624-16-214-3	WELDMENT - INFEED CAGE LOWER SIDE ANGLE	1
4	5624-16-212-3	WELDMENT - INFEED CAGE UPPER SIDE ANGLE	1
3	5624-16-216	WELDMENT - INFEED CAGE HOOP	1
2	5624-16-214-2	WELDMENT - INFEED CAGE LOWER SIDE ANGLE	1
1	5624-16-212	WELDMENT - INFEED CAGE UPPER SIDE ANGLE	1

THE INFORMATION CONTAINED IN THIS DRAWING IS THE SOLE PROPERTY OF ADCO MFG. ANY REPRODUCTION IN PART OR WHOLE WITHOUT THE WRITTEN PERMISSION OF ADCO MFG IS PROHIBITED.

10/11

ASSEMBLY - INFEED CAGE

ADCO
2170 ACADEMY AVE
SANGER, CA 93657
INFO@ADCOMFG.COM
559.875.5563

DRAWN BY: JJR
DATE: 05-21-15
SCALE: 1:16
REFERENCE: -
DRAWING NUMBER: 5624-16-004
SHEET 1/1
SIZE B

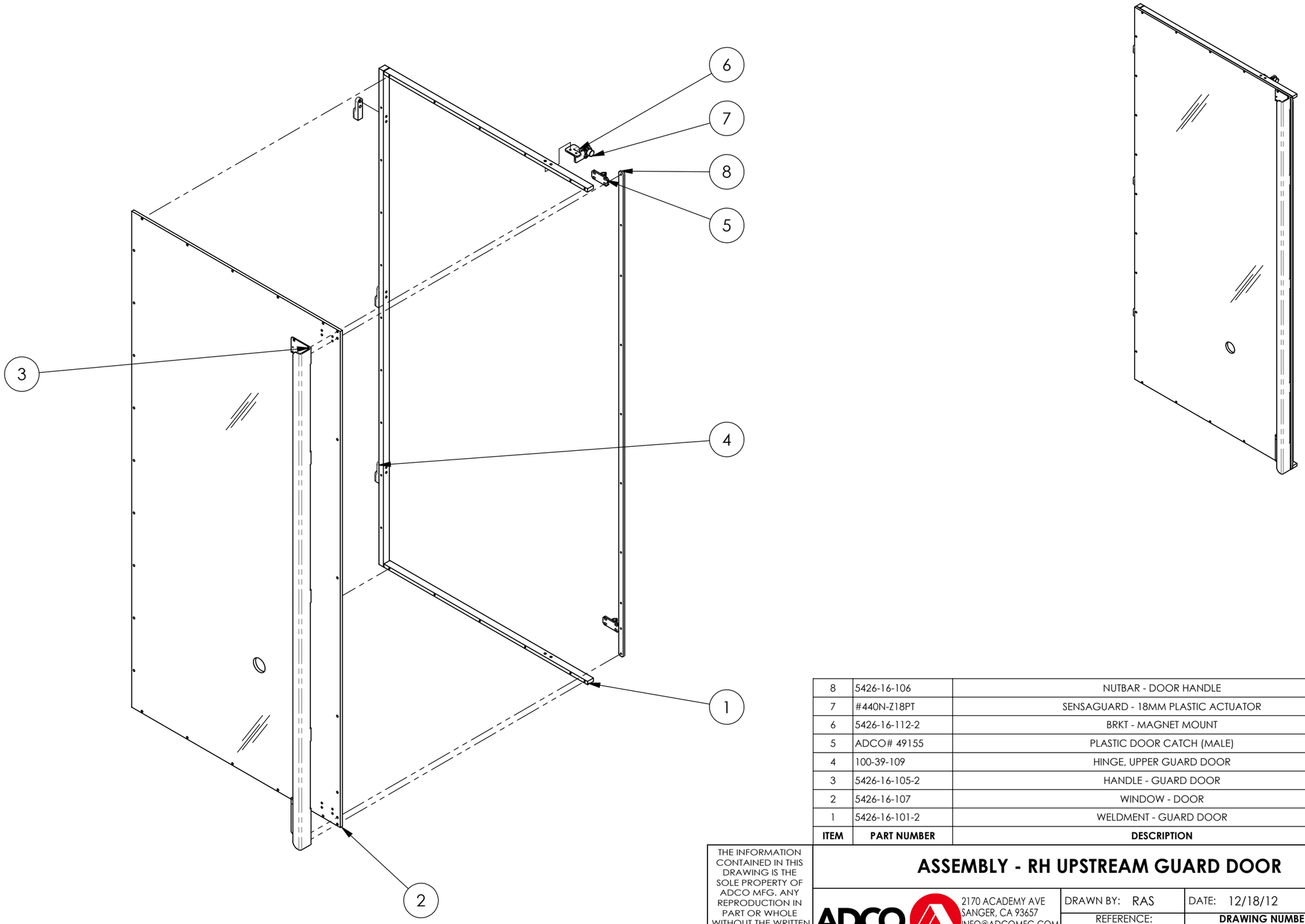

ITEM	PART NUMBER	DESCRIPTION	QTY
8	5426-16-106	NUTBAR - DOOR HANDLE	1
7	#440N-Z18PT	SENSAGUARD - 18MM PLASTIC ACTUATOR	1
6	5426-16-112-2	BRKT - MAGNET MOUNT	1
5	ADCO# 49155	PLASTIC DOOR CATCH (MALE)	2
4	100-39-109	HINGE, UPPER GUARD DOOR	3
3	5426-16-105-2	HANDLE - GUARD DOOR	1
2	5426-16-107	WINDOW - DOOR	1
1	5426-16-101-2	WELDMENT - GUARD DOOR	1

THE INFORMATION CONTAINED IN THIS DRAWING IS THE SOLE PROPERTY OF ADCO MFG. ANY REPRODUCTION IN PART OR WHOLE WITHOUT THE WRITTEN PERMISSION OF ADCO MFG IS PROHIBITED.

10/11

ASSEMBLY - RH UPSTREAM GUARD DOOR

ADCO
2170 ACADEMY AVE
SANGER, CA 93657
INFO@ADCOMFG.COM
559.875.5563

DRAWN BY: RAS | DATE: 12/18/12 | SCALE: 1:12

REFERENCE: 5381-15-002 | DRAWING NUMBER: **5426-16-004** | SHEET 1/1 | SIZE B

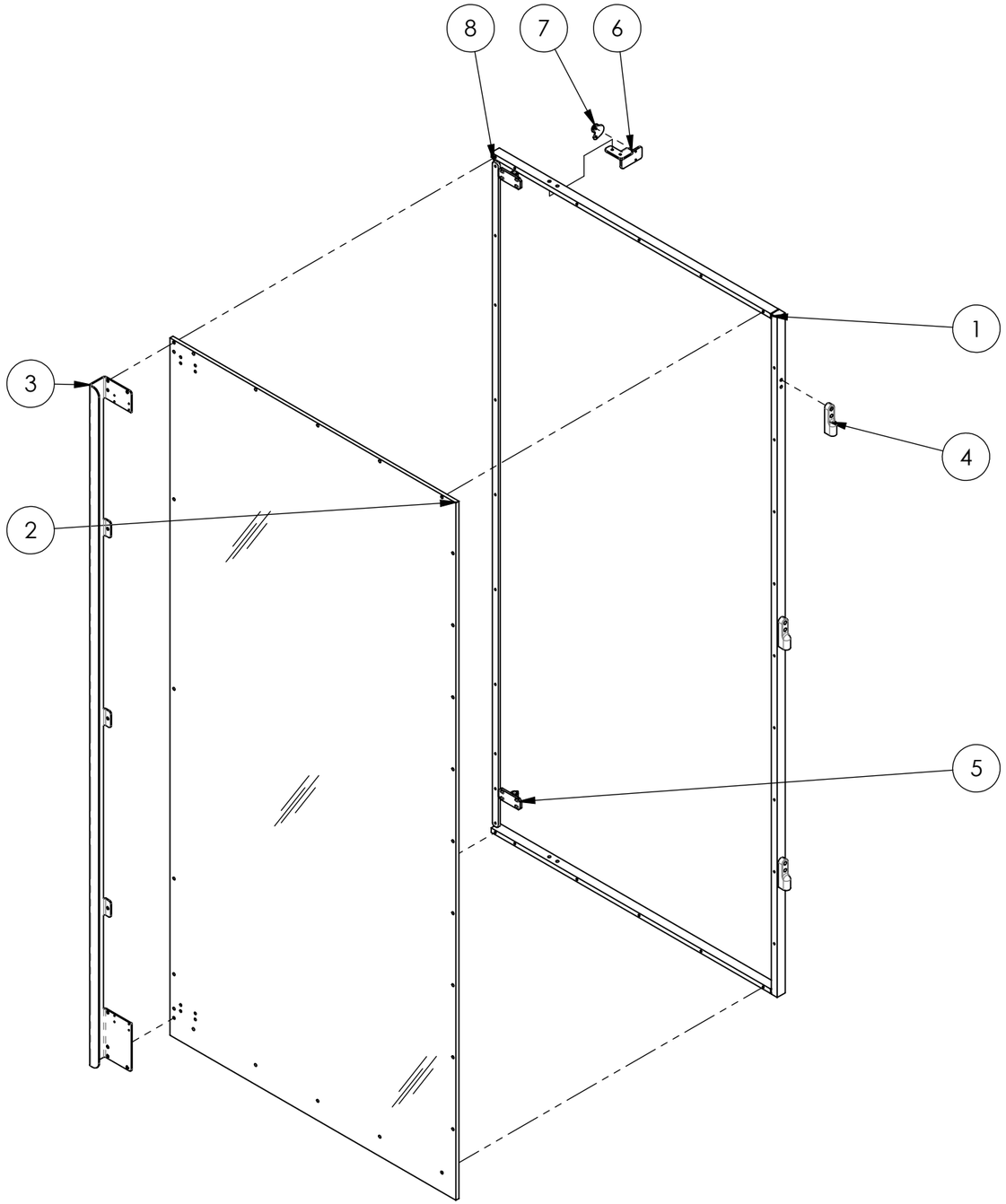

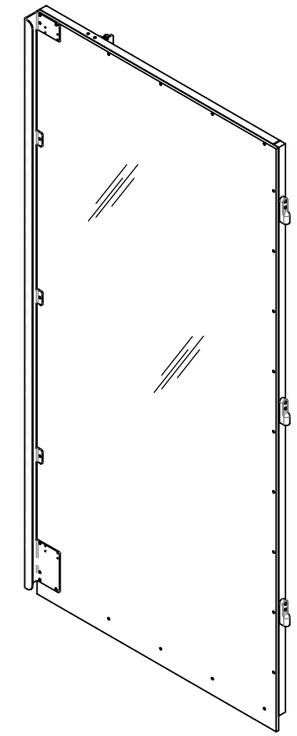

ITEM	PART NUMBER	DESCRIPTION	QTY
8	5426-16-106	NUTBAR - DOOR HANDLE	1
7	#440N-Z18PT	SENSAGUARD - 18MM PLASTIC ACTUATOR	1
6	5426-16-112-3	BRKT - MAGNET MOUNT	1
5	ADCO# 49155	PLASTIC DOOR CATCH (MALE)	2
4	100-39-109	HINGE, UPPER GUARD DOOR	3
3	5426-16-105-3	HANDLE - GUARD DOOR	1
2	5624-16-200	WINDOW - DOOR	1
1	5426-16-101-3	WELDMENT - GUARD DOOR	1

THE INFORMATION CONTAINED IN THIS DRAWING IS THE SOLE PROPERTY OF ADCO MFG. ANY REPRODUCTION IN PART OR WHOLE WITHOUT THE WRITTEN PERMISSION OF ADCO MFG IS PROHIBITED.

ASSEMBLY - RH UPSTREAM GUARD DOOR

ADCO
2170 ACADEMY AVE
SANGER, CA 93657
INFO@ADCOMFG.COM
559.875.5563

DRAWN BY: JJR | DATE: 12/26/12 | SCALE: 1:12

REFERENCE: 5381-15-002 | DRAWING NUMBER: **5426-16-005** | SHEET 1/1 | SIZE B

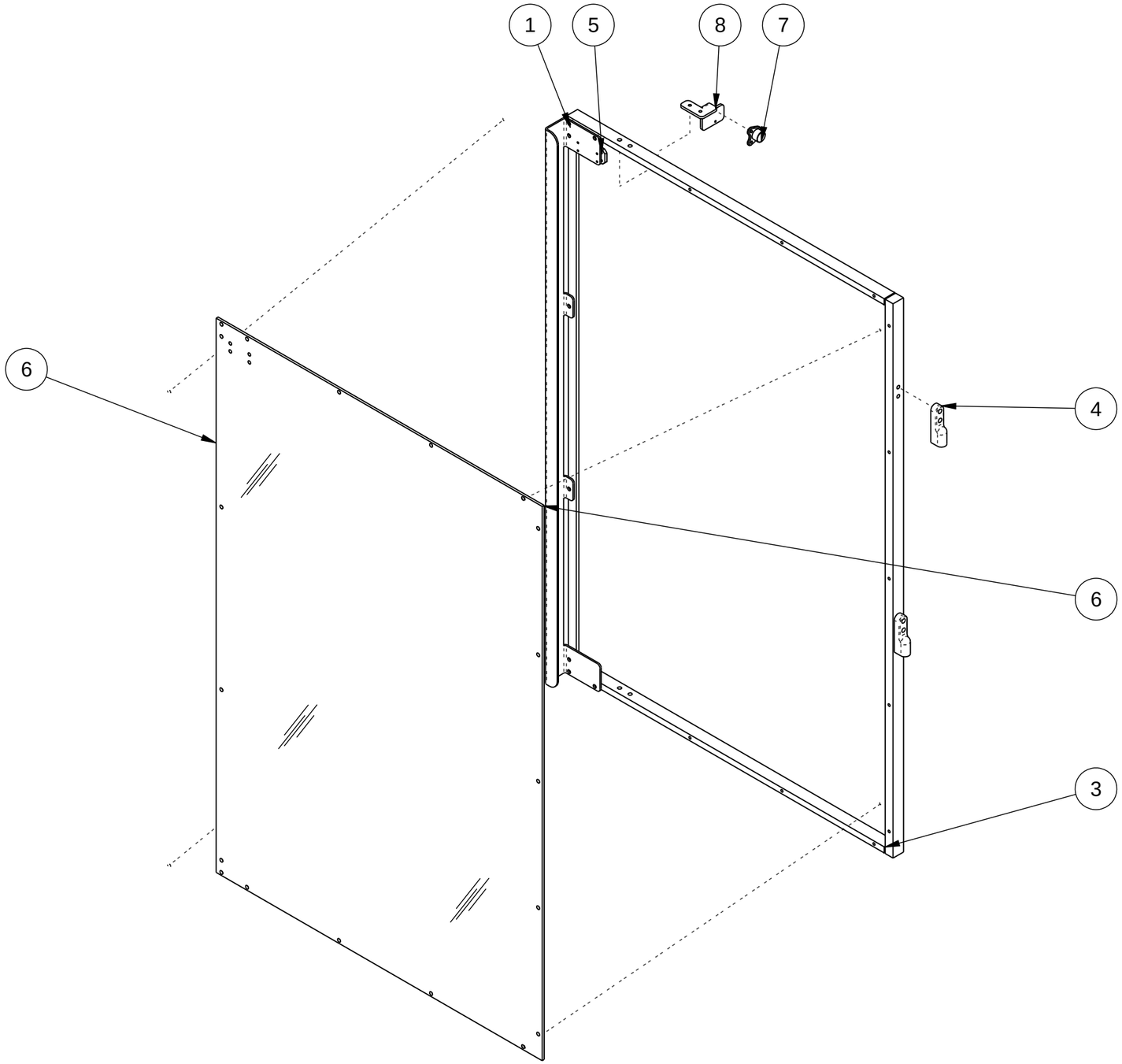

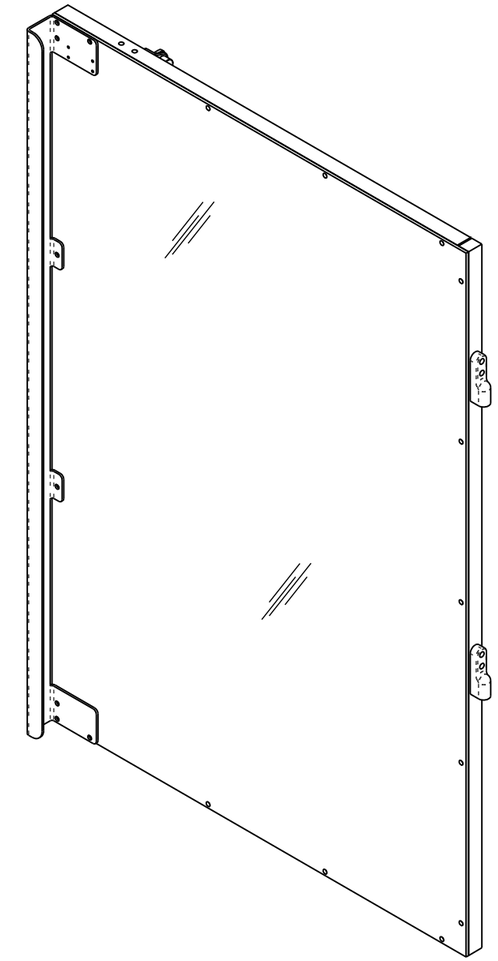

ITEM	PART NUMBER	DESCRIPTION	QTY
8	5426-16-112-3	BRKT - MAGNET MOUNT	1
7	#440N-Z18PT	SENSAGUARD - 18MM PLASTIC ACTUATOR	1
6	5624-16-226	WINDOW - DOOR	1
5	ADCO# 49155	PLASTIC DOOR CATCH (MALE)	1
4	100-39-109	HINGE, UPPER GUARD DOOR	2
3	5426-16-114-3	WELDMENT - INFEED GUARD DOOR	1
2	5624-16-224-2	HANDLE - INFEED GUARD DOOR	1
1	5624-16-225	NUTBAR - DOOR HANDLE	1

THE INFORMATION CONTAINED IN THIS DRAWING IS THE SOLE PROPERTY OF ADCO MFG. ANY REPRODUCTION IN PART OR WHOLE WITHOUT THE WRITTEN PERMISSION OF ADCO MFG IS PROHIBITED.

10/11

ASSEMBLY - RH UPSTREAM GUARD DOOR

ADCO
2170 ACADEMY AVE
SANGER, CA 93657
INFO@ADCOMFG.COM
559.875.5563

DRAWN BY: JJR	DATE: 05-21-15	SCALE: 1:8	
REFERENCE: 5579-16-005	DRAWING NUMBER: **5624-16-006**	SHEET 1/1	SIZE B

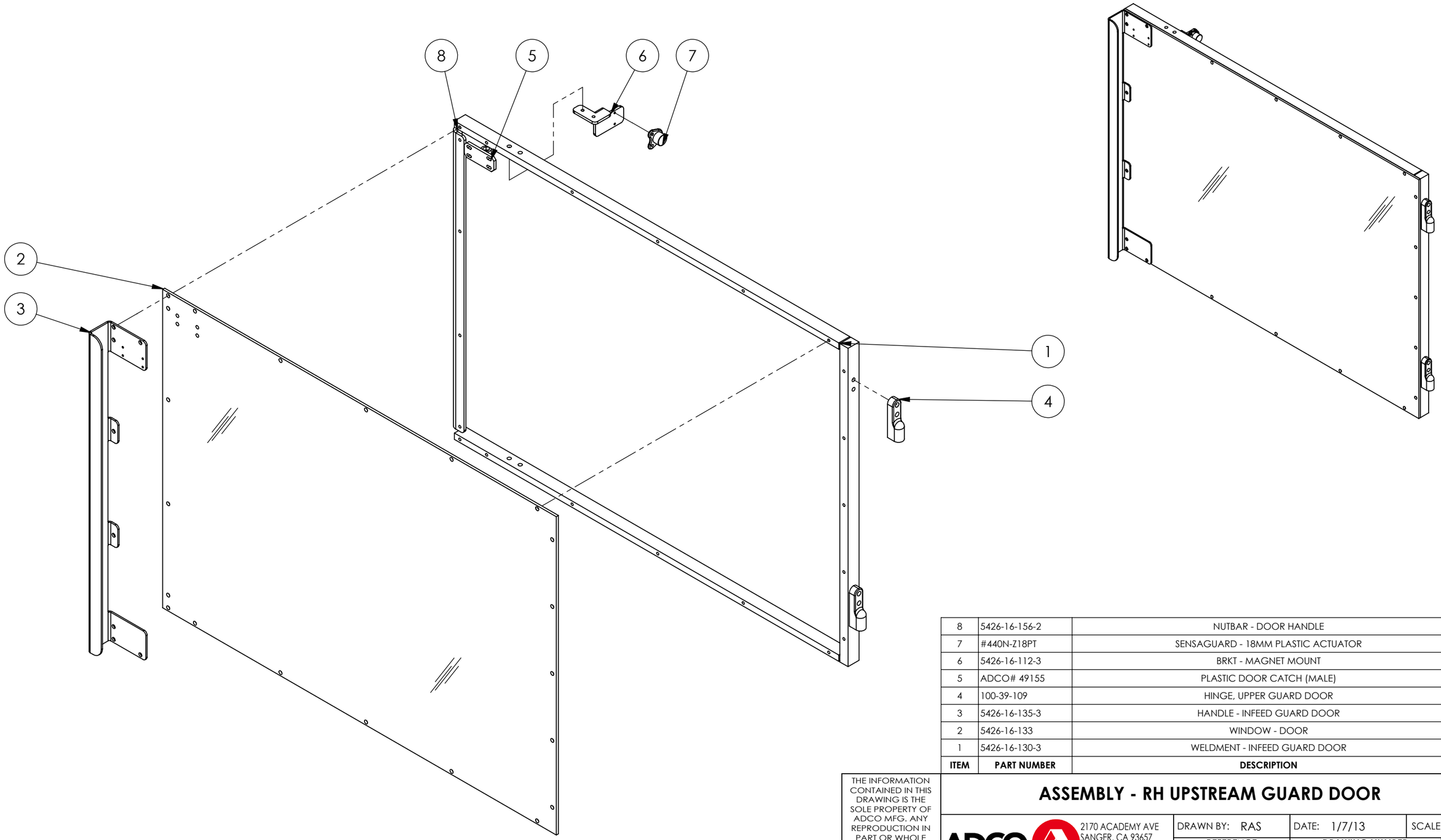

ITEM	PART NUMBER	DESCRIPTION	QTY
8	5426-16-156-2	NUTBAR - DOOR HANDLE	1
7	#440N-Z18PT	SENSAGUARD - 18MM PLASTIC ACTUATOR	1
6	5426-16-112-3	BRKT - MAGNET MOUNT	1
5	ADCO# 49155	PLASTIC DOOR CATCH (MALE)	1
4	100-39-109	HINGE, UPPER GUARD DOOR	2
3	5426-16-135-3	HANDLE - INFEED GUARD DOOR	1
2	5426-16-133	WINDOW - DOOR	1
1	5426-16-130-3	WELDMENT - INFEED GUARD DOOR	1

THE INFORMATION CONTAINED IN THIS DRAWING IS THE SOLE PROPERTY OF ADCO MFG. ANY REPRODUCTION IN PART OR WHOLE WITHOUT THE WRITTEN PERMISSION OF ADCO MFG IS PROHIBITED.

16/11

ASSEMBLY - RH UPSTREAM GUARD DOOR

ADCO
2170 ACADEMY AVE
SANGER, CA 93657
INFO@ADCOMFG.COM
559.875.5563

DRAWN BY: RAS	DATE: 1/7/13	SCALE: 1:6	
REFERENCE: 5426-16-013	DRAWING NUMBER: **5426-16-014**	SHEET 1/1	SIZE B

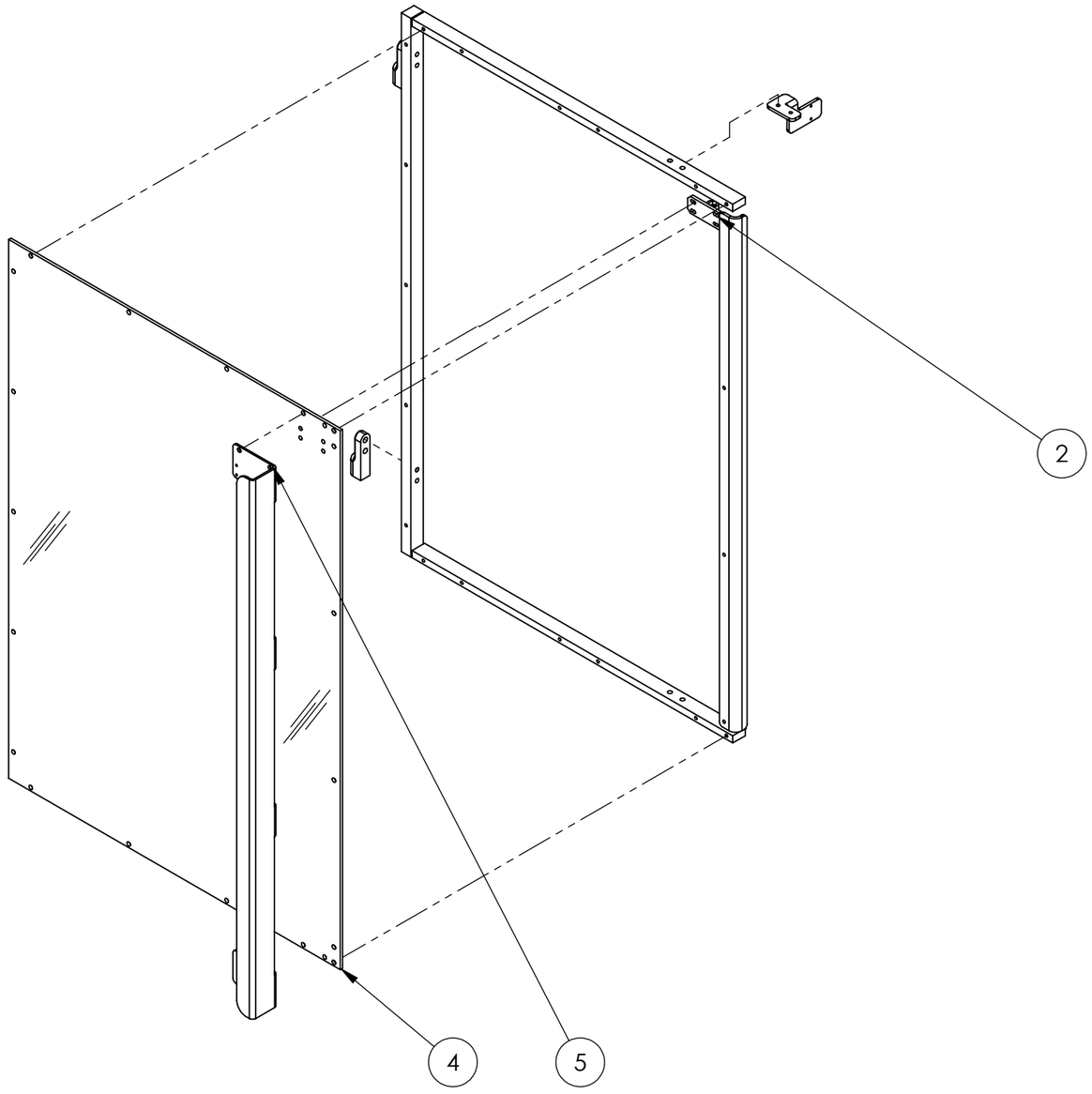

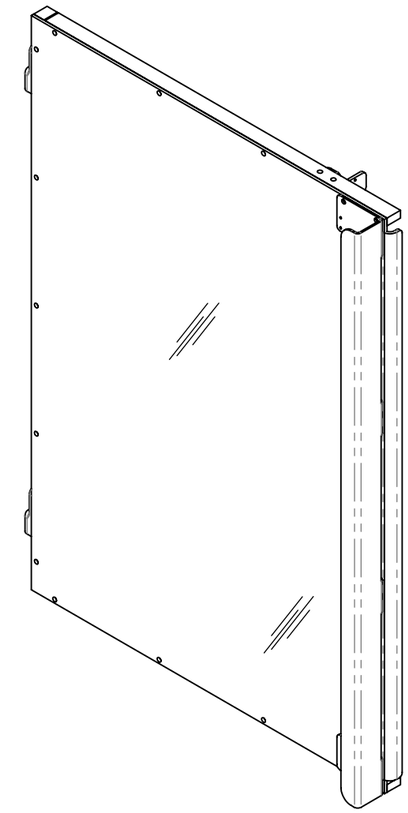

ITEM	PART NUMBER	DESCRIPTION	QTY
7	5624-16-156	NUTBAR - DOOR HANDLE	1
6	5426-16-112-2	BRKT - MAGNET MOUNT	1
5	5624-16-135-2	HANDLE - INFEED GUARD DOOR	1
4	5624-16-133	WINDOW - DOOR	1
3	5624-16-130-2	WELDMENT - GUARD DOOR	1
2	ADCO# 49155	PLASTIC DOOR CATCH (MALE)	1
1	100-39-109	HINGE, UPPER GUARD DOOR	2

THE INFORMATION CONTAINED IN THIS DRAWING IS THE SOLE PROPERTY OF ADCO MFG. ANY REPRODUCTION IN PART OR WHOLE WITHOUT THE WRITTEN PERMISSION OF ADCO MFG IS PROHIBITED.

10/11

ASSEMBLY - RH UPSTREAM GUARD DOOR

ADCO
2170 ACADEMY AVE
SANGER, CA 93657
INFO@ADCOMFG.COM
559.875.5563

DRAWN BY: CR	DATE: 02/23/15	SCALE: 1:8	
REFERENCE: 5426-16-015	DRAWING NUMBER: **5624-16-015**	SHEET 1/1	SIZE B

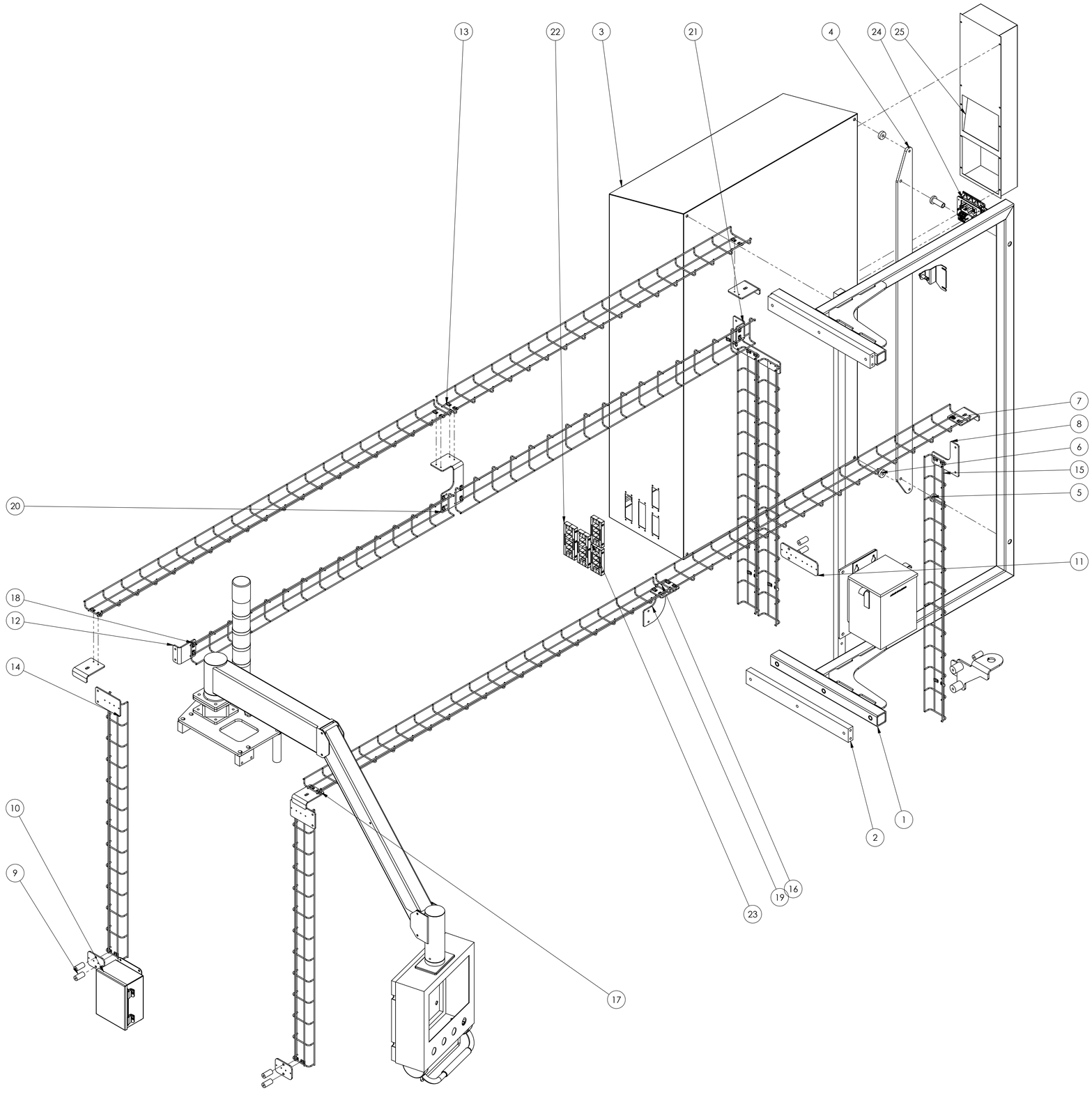

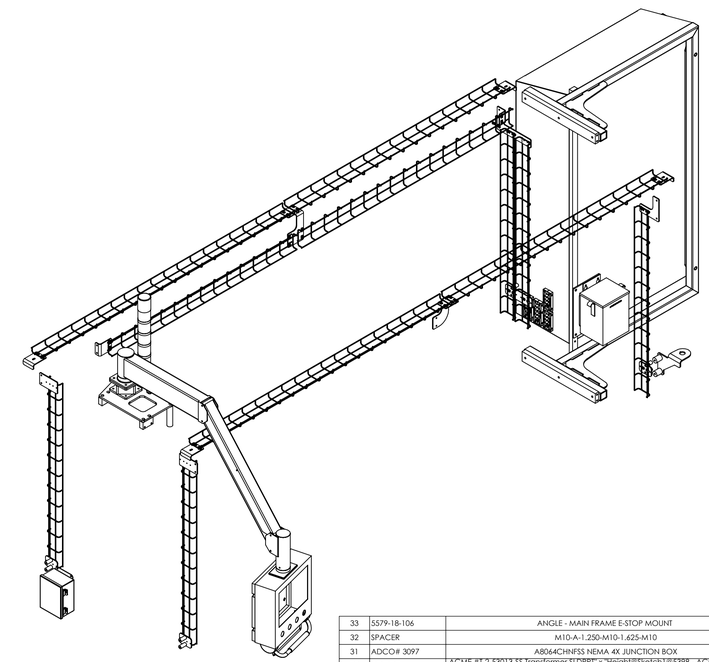

ITEM	PART NUMBER	DESCRIPTION	QTY
33	5579-18-106	ANGLE - MAIN FRAME E-STOP MOUNT	1
32	SPACER	M10-A-1.250-M10-1.625-M10	2
31	ADCO# 3097	A8064CHNFSS NEMA 4X JUNCTION BOX	1
30	ADCO#	ACME #T-2-53013-SS Transformer,SLDPRT" x "Height@Sketch1@5398 - ACME #T-2-53013-SS Transformer	1
29	5579-18-103	ANGLE - TRANSFORMER MOUNT	1
28	5398-18-005	STRONG ARM MOUNT ASSEMBLY	1
27	ADCO#	EFECTOR, PROX SENSOR - IFC 204	1
26	5579-18-107	ANGLE - CABINET PROX MOUNT	1
25	ADCO#45776	NOREN - CC600FP-115 SC, SS, W COMPACT CABINET COOLER, SS	1
24	ADCO #	MENCOM - #GF-RJ45-R-32	1
23	ADCO# 42168	ICOTEK, KEL 16/8	2
22	ADCO# 41498	ICOTEK, KEL 24/10	2
21	5426-18-113	ANGLE - WIREWAY MOUNT DOWNSTREAM CORNER	1
20	5319-18-105-3	ANGLE - WIREWAY MOUNT MIDSTREAM	1
19	5426-18-115	ANGLE - WIREWAY MOUNT MIDSTREAM	1
18	5319-18-107	WIRE WAY - 55 1/4" LONG	1
17	5319-18-111	WIRE WAY - 74 15/16" LONG	2
16	5319-18-100	WIRE WAY - 63 1/8" LONG	3
15	5319-18-101	WIRE WAY - 47 3/8" LONG	5
14	5426-18-111	PLATE - WIREWAY MOUNT	2
13	100-45-103	CLIP - WIRE BASKET MOUNT	44
12	5319-18-110	ANGLE - WIREWAY MOUNT AT FEEDER	1
11	5402-18-120	PLATE - BASKET MOUNT	1
10	5312-18-112	PLATE - BASKET MOUNT	3
9	SPACER	M10-S-0.750-M8-1.625-M8	8
8	5426-18-114	ANGLE - WIREWAY MOUNT DOWNSTREAM CORNER	1
7	5319-18-106	ANGLE - WIREWAY MOUNT UPPER CORNER	4
6	SPACER	A09-S-1.250-0.422-0.375	2
5	SPACER	A09-S-1.250-0.515-0.250	2
4	5579-18-102	PLATE - CABINET MOUNT	1
3	5579-18-100	MAIN ELECTRIC CABINET	1
2	5398-18-101	BAR - CABINET MOUNT	2
1	5580-18-102	WELDMENT - MAIN CABINET MOUNT	1

THE INFORMATION CONTAINED IN THIS DRAWING IS THE SOLE PROPERTY OF ADCO MFG. ANY REPRODUCTION IN PART OR WHOLE WITHOUT THE WRITTEN PERMISSION OF ADCO MFG IS PROHIBITED.

ASSMEBLY - ELECTRICAL COMPONENTS

ADCO
2170 ACADEMY AVE
SANGER, CA 93657
INFO@ADCOMFG.COM
559.875.5563

DRAWN BY: JJR	DATE: 8/6/14	SCALE: 1:8
REFERENCE: 5580-18-001	DRAWING NUMBER: 5579-18-001	SHEET 1/1 SIZE D

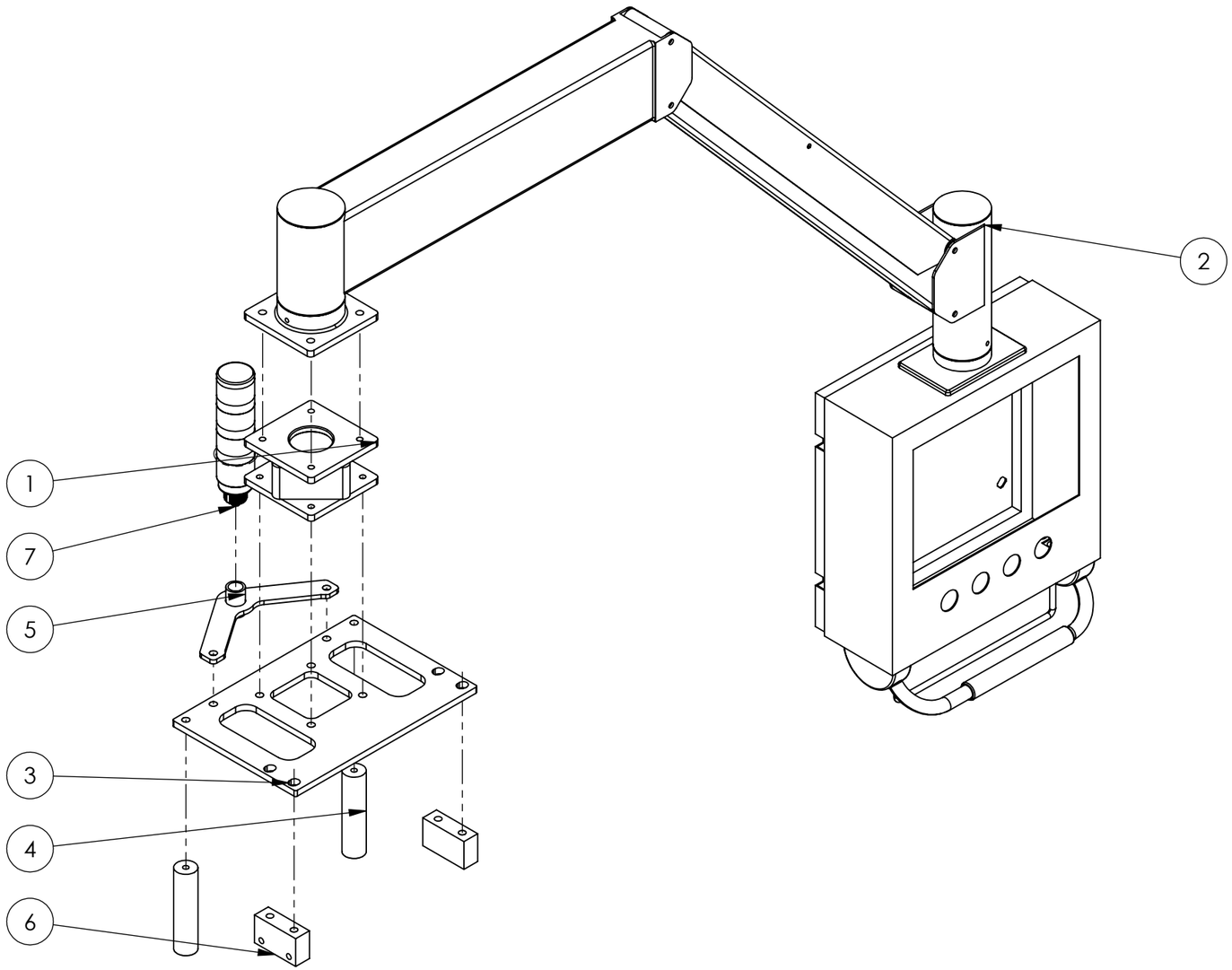

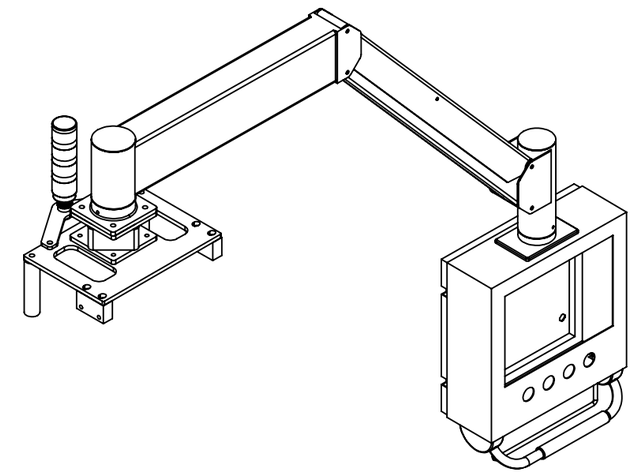

ITEM	PART NUMBER	DESCRIPTION	QTY
7	ADCO#	BANNER, STACK LIGHT - #TL50HBGYRQ	1
6	5267-18-128	BAR - PENDANT PLATE MOUNT	2
5	5304-18-126	WELDMENT - STACK LIGHT BRACKET	1
4	SPACER	M10-S-1.250-M10-5.125-M10	2
3	5624-18-102	PLATE - PENDANT MOUNT	1
2	5390-17-130	PENDANT ARM - MAIN CONTROL BOX	1
1	5398-18-111	WELDMENT - PENDANT MOUNT	1

THE INFORMATION CONTAINED IN THIS DRAWING IS THE SOLE PROPERTY OF ADCO MFG. ANY REPRODUCTION IN PART OR WHOLE WITHOUT THE WRITTEN PERMISSION OF ADCO MFG IS PROHIBITED.

STRONG ARM MOUNT ASSEMBLY

ADCO
2170 ACADEMY AVE
SANGER, CA 93657
INFO@ADCOMFG.COM
559.875.5563

DRAWN BY: JJR | DATE: 2/17/15 | SCALE: 1:7

REFERENCE: 5398-18-005 | DRAWING NUMBER: **5624-18-003** | SHEET 1/1 | SIZE B

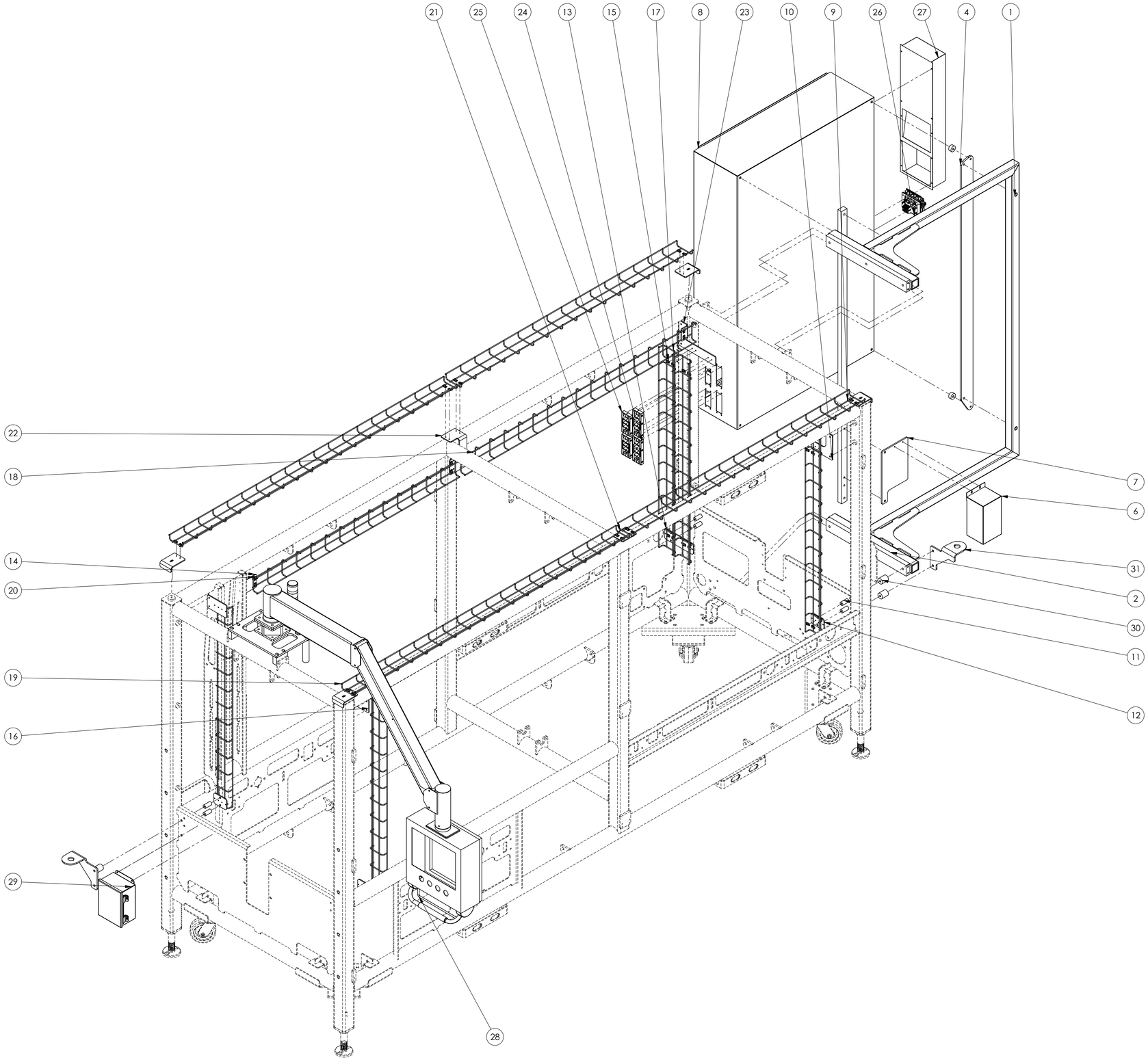

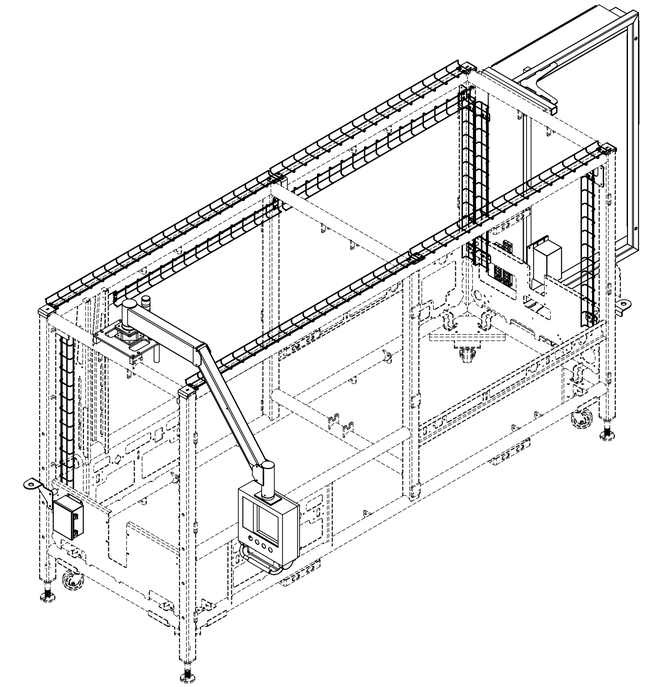

ITEM	PART NUMBER	DESCRIPTION	QTY
31	5579-18-106	ANGLE - MAIN FRAME E-STOP MOUNT	2
30	SPACER	M10-A-1.250-M10-1.625-M10	4
29	ADCO# 3097	A8064CHNFSS NEMA 4X JUNCTION BOX	1
28	5624-18-003	STRONG ARM MOUNT ASSEMBLY	1
27	ADCO#45776	NOREN - CC600FP-115 SC, SS, W COMPACT CABINET COOLER, SS	1
26	ADCO #	MENCOM - #GF-RJ45-R-32	1
25	ADCO# 42168	ICOTEK, KEL 16/8	2
24	ADCO# 41498	ICOTEK, KEL 24/10	2
23	5426-18-113	ANGLE - WIREWAY MOUNT DOWNSTREAM CORNER	1
22	5319-18-105-3	ANGLE - WIREWAY MOUNT MIDSTREAM	1
21	5426-18-115	ANGLE - WIREWAY MOUNT MIDSTREAM	1
20	5319-18-107	WIRE WAY - 55 1/4" LONG	1
19	5319-18-111	WIRE WAY - 74 15/16" LONG	2
18	5319-18-100	WIRE WAY - 63 1/8" LONG	3
17	5319-18-101	WIRE WAY - 47 3/8" LONG	5
16	5426-18-111	PLATE - WIREWAY MOUNT	2
15	100-45-103	CLIP - WIRE BASKET MOUNT	44
14	5319-18-110	ANGLE - WIREWAY MOUNT AT FEEDER	1
13	5402-18-120	PLATE - BASKET MOUNT	1
12	5312-18-112	PLATE - BASKET MOUNT	3
11	SPACER	M10-S-0.750-M8-1.625-M8	8
10	5426-18-114	ANGLE - WIREWAY MOUNT DOWNSTREAM CORNER	1
9	5319-18-106	ANGLE - WIREWAY MOUNT UPPER CORNER	4
8	5624-18-105	MAIN CABINET CUT	1
7	5624-18-104	PLATE - TRANSFORMER MOUNT	1
6	ADCO#	JEFFERSON #411-0071-000 (1KVA)	1
5	SPACER	A09-S-1.250-0.422-0.625	2
4	5624-18-107	PLATE - CABINET MOUNT	1
3	5624-18-103	MAIN ELECTRIC CABINET	1
2	5398-18-101	BAR - CABINET MOUNT	2
1	5580-18-102	WELDMENT - MAIN CABINET MOUNT	1

THE INFORMATION CONTAINED IN THIS DRAWING IS THE SOLE PROPERTY OF ADCO MFG. ANY REPRODUCTION IN PART OR WHOLE WITHOUT THE WRITTEN PERMISSION OF ADCO MFG IS PROHIBITED.

ASSMEBLY - ELECTRICAL COMPONENTS

ADCO
2170 ACADEMY AVE
SANGER, CA 93657
INFO@ADCOMFG.COM
559.875.5563

DRAWN BY: JJR	DATE: 2/17/15	SCALE: 1:10
REFERENCE: 5579-18-001	DRAWING NUMBER: **5624-18-004**	SHEET 1/1 SIZE D

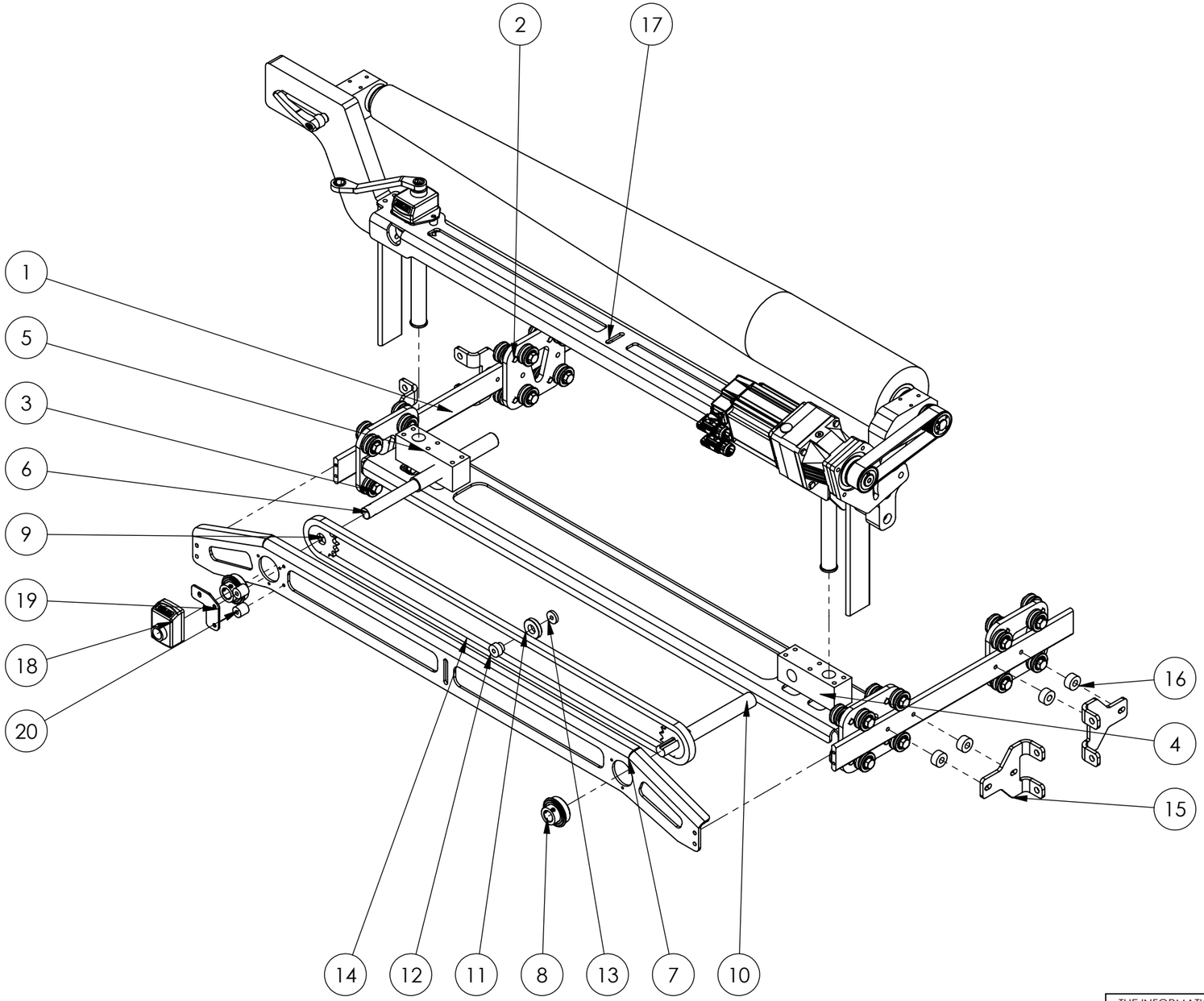

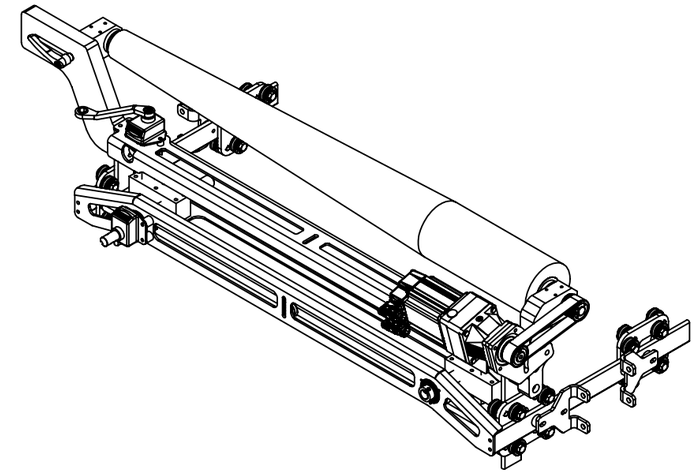

ITEM	PART NUMBER	DESCRIPTION	QTY
20	SPACER	A09-S-0.750-0.265-0.750 (siko mount)	2
19	5624-19-117	PLATE - SIKO COUNTER MOUNT	1
18	ADCO #51273	SIKO - DIGITAL INDICATOR (DA09S-02-20-0-I-VA20-O-A-K-AD-OZP-BP-ORP)	1
17	5624-19-005	ASSEMBLY - FEEDSCREW MOUNT	1
16	SPACER	A09-S-1.000-0.422-0.500	8
15	5624-19-109	ANGLE - MOUNT BRACE	4
14	#40 ADJUST CHAIN	34" #40 AQUA CHAIN	1
13	SPACER	A09-S-0.875-0.265-0.179	1
12	5624-19-108	IDLER SPINDLE - VERTICAL ADJ CHAIN	1
11	830-04-119	IDLER - VERTICAL ADJ CHAIN	1
10	5624-19-106	SCREW SHAFT - HORIZONTAL ADJUST	1
9	830-04-110	SPROCKET - PANEL ADJUST	2
8	SSER-204	IPTCI INSERT BEARING - SSER-204 - 20MM ID X 47MM OD X 15.9MM WIDE	2
7	5624-19-107	ANGLE - SIDE ADJUST BRACE	1
6	5624-19-105	SCREW SHAFT - HORIZONTAL ADJUST @ HANDLE	1
5	5624-04-111	BLOCK - VERT + HORIZ ADJUSTMENT	2
4	5624-19-103	CHANNEL - INDEXING CARRIAGE TIE	1
3	830-04-006	ASSEMBLY - INA ROLLER CARRIAGE PLATE	2
2	830-04-008	ASSEMBLY - INA ROLLER CARRIAGE PLATE	2
1	5624-19-102	RAIL - TRANSFER SUPPORT	2

THE INFORMATION CONTAINED IN THIS DRAWING IS THE SOLE PROPERTY OF ADCO MFG. ANY REPRODUCTION IN PART OR WHOLE WITHOUT THE WRITTEN PERMISSION OF ADCO MFG IS PROHIBITED.

10/11

ASSEMBLY - ADJ FEEDSCREW MOUNT

ADCO
2170 ACADEMY AVE
SANGER, CA 93657
INFO@ADCOMFG.COM
559.875.5563

DRAWN BY: JJR
DATE: 2/27/15
SCALE: 1:8
REFERENCE: -
DRAWING NUMBER: 5624-19-004
SHEET 1/1
SIZE B

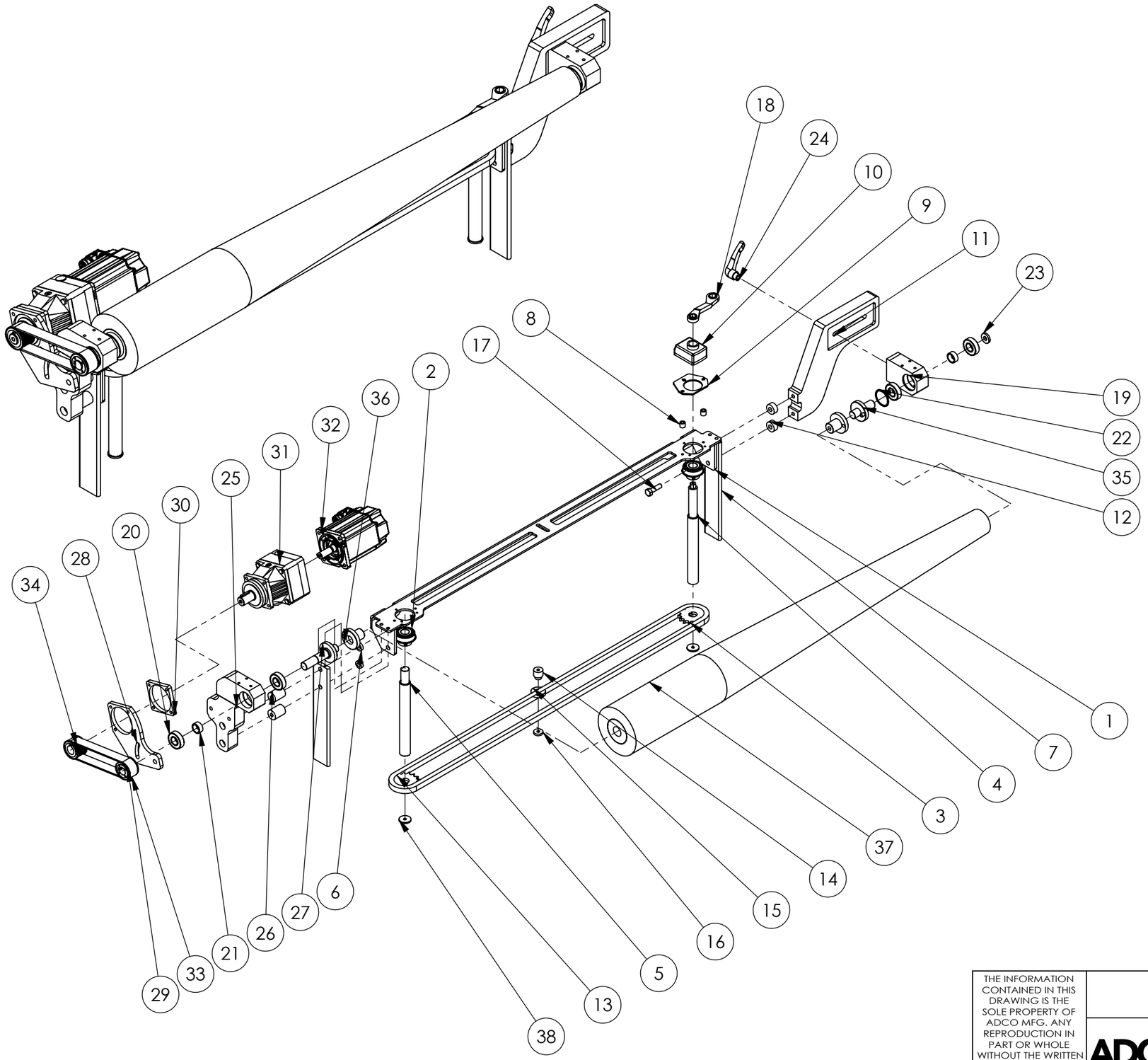

ITEM	PART NUMBER	DESCRIPTION	QTY
38	SPACER	A09-S-1.125-0.265-0.120	2
37	5267-20-900	FEED SCREW - INDEXER (SEE BOM)	1
36	2608-51	FEED SCREW TIMING SLEEVE	2
35	5580-19-103	WELDMENT - FEED SCREW TAIL SHAFT	1
34	#HTPK 28 S5M A N22	"MISUMI" TIMING PULLEY	1
33	#HTBN 490 S5M 250	GEARBELT - MISUMI	1
32	#MPF-B320P-MJ72AA	ALLEN BRADLEY, SERVO MOTOR	1
31	#P421SPZ0100MTF - AB MPF-B32	STOBER, SERVO GEARBOX - P421SPR	1
30	5398-19-100	PLATE - GEARBOX SPACER	1
29	5228-19-112	TIMING PULLEY DRIVEN	1
28	5267-20-119	PLATE - GEARBOX MOUNT	1
27	5580-19-102	WELDMENT - FEED SCREW DRIVE SHAFT	1
26	SPACER	M10-S-1.000-M10-1.322-M10	2
25	5624-19-118	HOUSING - DRIVE END BEARING	1
24	#06454-310	KIPP, 10MM, ADJUSTABLE HANDEL, FEMALE, SS	1
23	SPACER	A09-S-1.000-0.422-0.179	1
22	#RR-165-S	RETAINING RING - SPIROLOX INTERNAL	1
21	SPACER	A09-S-1.000-0.790-0.430	2
20	#W6004-2RS	RADIAL BEARING - SKF - 20MM ID X 42MM OD X 12MM WIDE	4
19	5492-12-105	HOUSING - TAIL END BEARING	1
18	ADCO#42652	KASTAR ROWM 1214 RATCHET WRENCH 12mm x 14mm	1
17	HARDWARE	BOLT - 10mm X 40mm LG SS HEX HEAD	1
16	SPACER	A09-S-0.875-0.265-0.179	1
15	830-04-119	IDLER - VERTICAL ADJ CHAIN	1
14	830-04-118	IDLER SPINDLE - VERTICAL ADJ CHAIN	1
13	#40 ADJUST CHAIN	34" #40 AQUA CHAIN	1
12	SPACER	a09-s-1.000-0.422-0.485	2
11	5624-19-115	BAR - FEEDSCREW MOUNT	1
10	ADCO #51272	DIGITAL COUNTER - SIKO (DA09S-04-20-0-E-VA20-O-A-K-AD-OZP-BP-ORP)	1
9	5178-04-139	PLATE - SIKO MOUNT	1
8	SPACER	A09-S-0.500-0.281-0.438	2
7	5624-19-114	RAIL - VERT SUPPORT	2
6	SPACER	A09-S-0.750-0.344-0.250	4
5	5624-19-111	SCREW SHAFT - VERTICAL ADJUST	1
4	5624-19-110	SCREW SHAFT - VERTICAL ADJUST @ HANDLE	1
3	830-04-110	SPROCKET - PANEL ADJUST	2
2	SSER-204	IPTCI INSERT BEARING - SSER-204 - 20MM ID X 47MM OD X 15.9MM WIDE	2
1	5624-19-112	WELDMENT - TRANSFER VERTICAL SUPPORT	1

THE INFORMATION CONTAINED IN THIS DRAWING IS THE SOLE PROPERTY OF ADCO MFG. ANY REPRODUCTION IN PART OR WHOLE WITHOUT THE WRITTEN PERMISSION OF ADCO MFG IS PROHIBITED.

ASSEMBLY - FEEDSCREW MOUNT

ADCO
2170 ACADEMY AVE
SANGER, CA 93657
INFO@ADCOMFG.COM
559.875.5563

DRAWN BY: JJR | DATE: 2/27/15 | SCALE: 1:10

REFERENCE: - | DRAWING NUMBER: **5624-19-005** | SHEET 1/1 | SIZE B

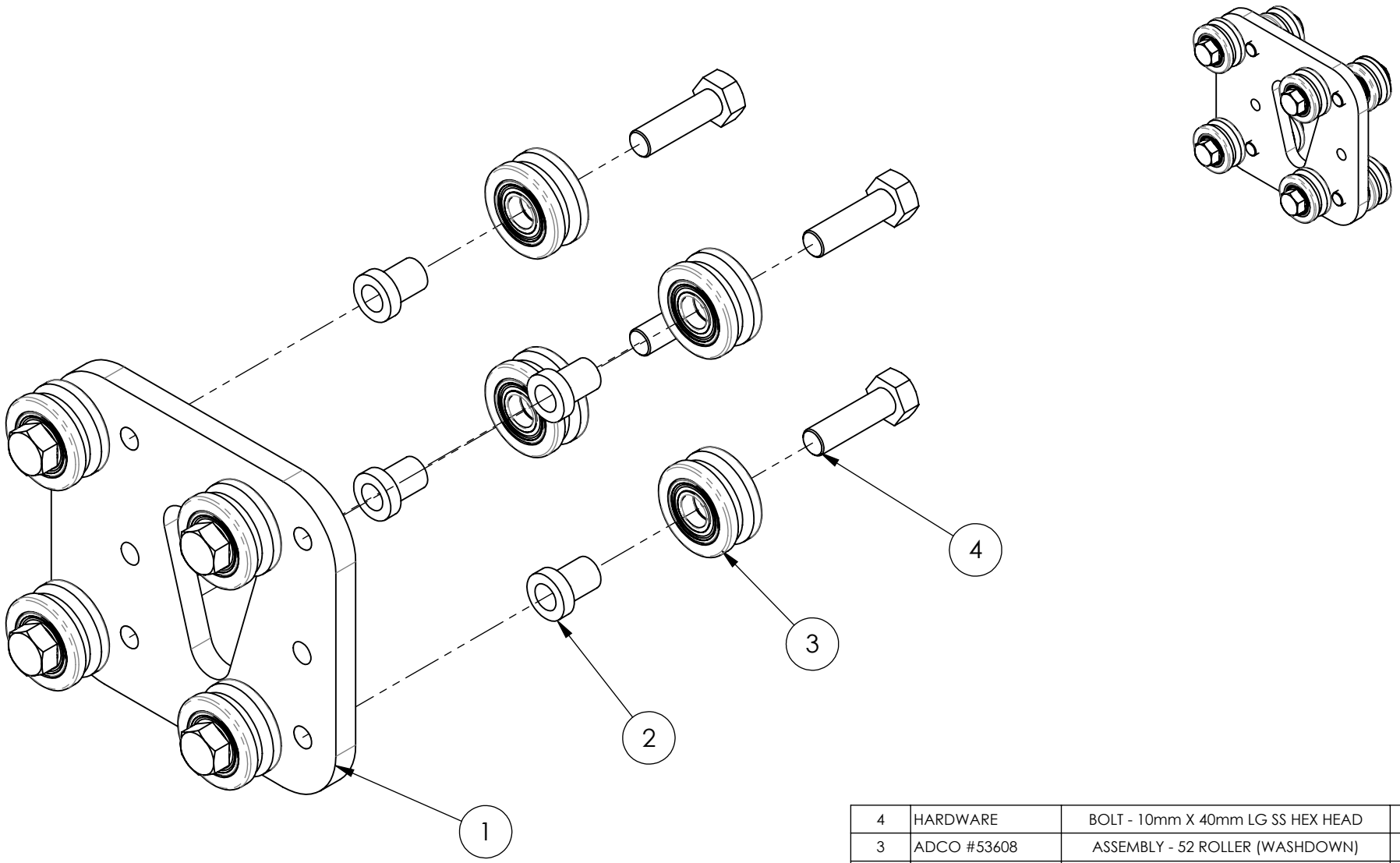

ITEM	PART NUMBER	DESCRIPTION	QTY
4	HARDWARE	BOLT - 10mm X 40mm LG SS HEX HEAD	8
3	ADCO #53608	ASSEMBLY - 52 ROLLER (WASHDOWN)	8
2	100-38-102	SPINDLE - SIZE 52 ROLLER	8
1	830-04-100	PLATE - INA BEARING MOUNT	1

08/13

ASSEMBLY - INA ROLLER CARRIAGE PLATE

ADCO where products meet packaging
2170 ACADEMY AVE
SANGER, CA 93657
INFO@ADCOMFG.COM
559.875.5563

DRAWN BY: CR | DATE: 07/17/14 | SCALE: 1:2

REFERENCE: - | DRAWING NUMBER: **830-04-006** | SHEET 1/1 | SIZE A

THE INFORMATION CONTAINED IN THIS DRAWING IS THE SOLE PROPERTY OF ADCO MANUFACTURING. ANY REPRODUCTION IN PART OR WHOLE WITHOUT WRITTEN PERMISSION OF ADCO MFG IS PROHIBITED.

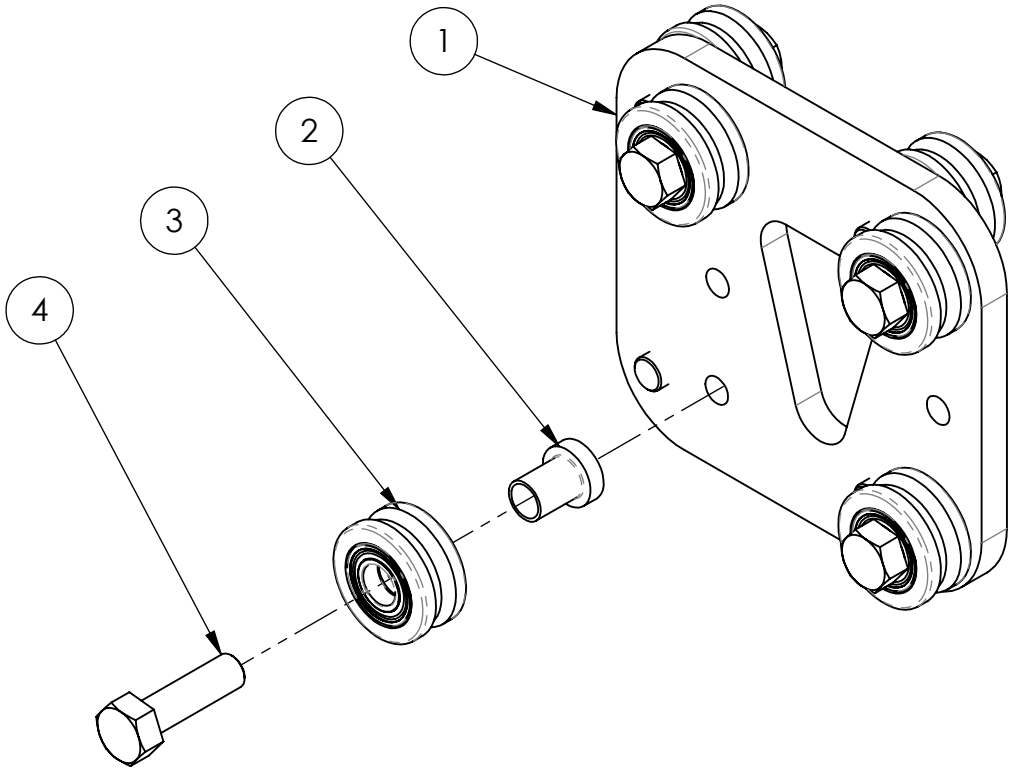

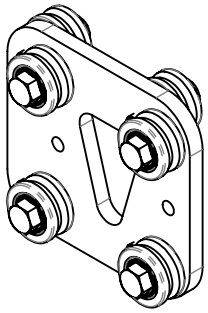

ITEM	PART NUMBER	DESCRIPTION	QTY
4	HARDWARE	BOLT - 10mm X 40mm LG SS HEX HEAD	8
3	ADCO #53608	ASSEMBLY - 52 ROLLER (WASHDOWN)	8
2	100-38-102	SPINDLE - SIZE 52 ROLLER	8
1	830-04-100	PLATE - INA BEARING MOUNT	1

08/13

ASSEMBLY - INA ROLLER CARRIAGE PLATE

ADCO where products meet packaging
2170 ACADEMY AVE
SANGER, CA 93657
INFO@ADCOMFG.COM
559.875.5563

DRAWN BY: CR | DATE: 06/09/14 | SCALE: 1:2

REFERENCE: - | DRAWING NUMBER: **830-04-008** | SHEET 1/1 | SIZE A

THE INFORMATION CONTAINED IN THIS DRAWING IS THE SOLE PROPERTY OF ADCO MANUFACTURING. ANY REPRODUCTION IN PART OR WHOLE WITHOUT WRITTEN PERMISSION OF ADCO MFG IS PROHIBITED.

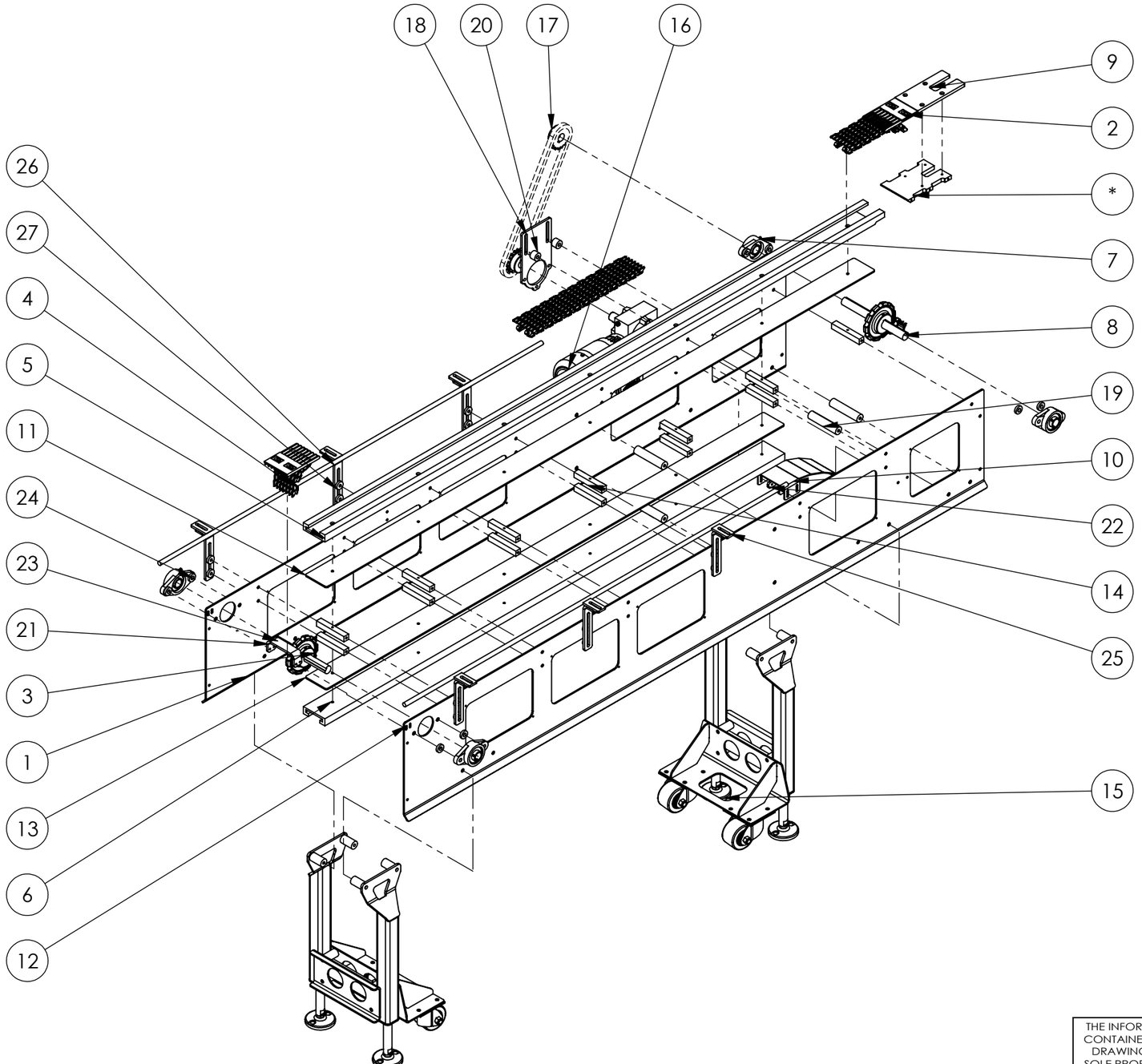

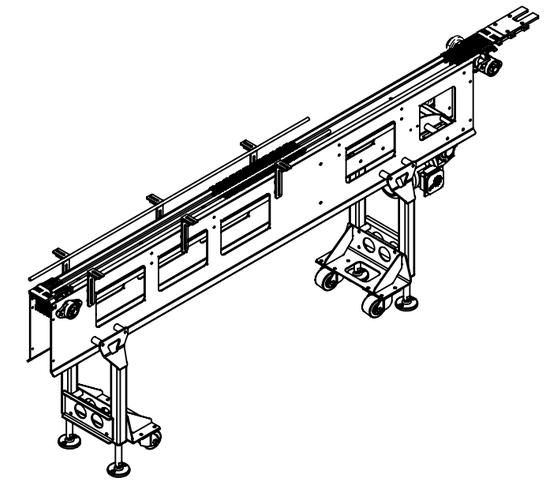

ITEM	PART NUMBER	DESCRIPTION	QTY
27	SPACER	A09-S-1.000-0.344-0.250	12
26	5402-20-101	MOUNT - SIDE GUIDE	6
25	5624-20-114	WELDMENT - INFEED SIDE GUIDE	2
24	A09-S-1.000-0.468-0.250	SPACER	8
23	5624-20-117	SHAFT - CONVEYOR IDLER	1
22	NUTPLATE	M24-S-1.500-2.500-0.750-0.250-M6	2
21	5624-20-113	CHANNEL - INFEED TRANSFER MOUNT	1
20	SPACER	A09-S-1.000-0.422-0.750	2
19	SPACER	M10-A-1.000-M10-4.500-M10	4
18	5624-20-112	PLATE - MOTOR MOUNT	1
17	SPROCKET	A01-_-401-18-1.000	2
16	SK1SMID50VZH-71L4	1/2 HP GEARMOTOR - 86RPM (20:1 RATIO) - 25mm SOLID S.S. SHAFT @ SIDE B - "M3" MOUNTING - NSD-+ PAINT - SHAFT COVER @ A - 230/460V-60Hz - T.B. @ 1 - C.E. @ 1	1
15	5624-20-003	ASSEMBLY - INFEED LEG	2
14	5624-20-111	BAR - INFEED CROSSMEMBER	13
13	5624-20-110	PLATE - LOWER TRACK SUPPORT	1
12	5624-20-103	PANEL - INFEED SIDE	1
11	5624-20-109	PLATE - UPPER TRACK SUPPORT	1
10	5624-20-108	BACKPLATE - INFEED T.T. RETURN	1
9	5624-20-107	PLATE - TRANSFER	1
8	5624-20-116	SHAFT - CONVEYOR DRIVE	1
7	#SUCTFL 205	IPTCI 2 BOLT FLANGE BEARING Ø25mm ADCO# 41430	4
6	5624-20-106	TRACK - INFEED CHAIN GUIDE UPPER	1
5	5624-20-105	TRACK - INFEED CHAIN GUIDE UPPER	1
4	ADCO# 31999	UNI-RIB CHAIN 3 1/2" (34LF880URTK350)	22
3	5624-20-101	TABLE-TOP CHAIN DRIVE SPROCKET	2
2	5624-20-104	UNI FINGER PLATE	2
1	5624-20-103	PANEL - INFEED SIDE	1

THE INFORMATION CONTAINED IN THIS DRAWING IS THE SOLE PROPERTY OF ADCO MFG. ANY REPRODUCTION IN PART OR WHOLE WITHOUT THE WRITTEN PERMISSION OF ADCO MFG IS PROHIBITED.

10/11

ASSEMBLY - INFEED CONVEYOR

ADCO
2170 ACADEMY AVE
SANGER, CA 93657
INFO@ADCOMFG.COM
559.875.5563

DRAWN BY: JJR	DATE: 2/17/15	SCALE: 1:14	
REFERENCE: -	DRAWING NUMBER: 5624-20-002	SHEET 1/1	SIZE B

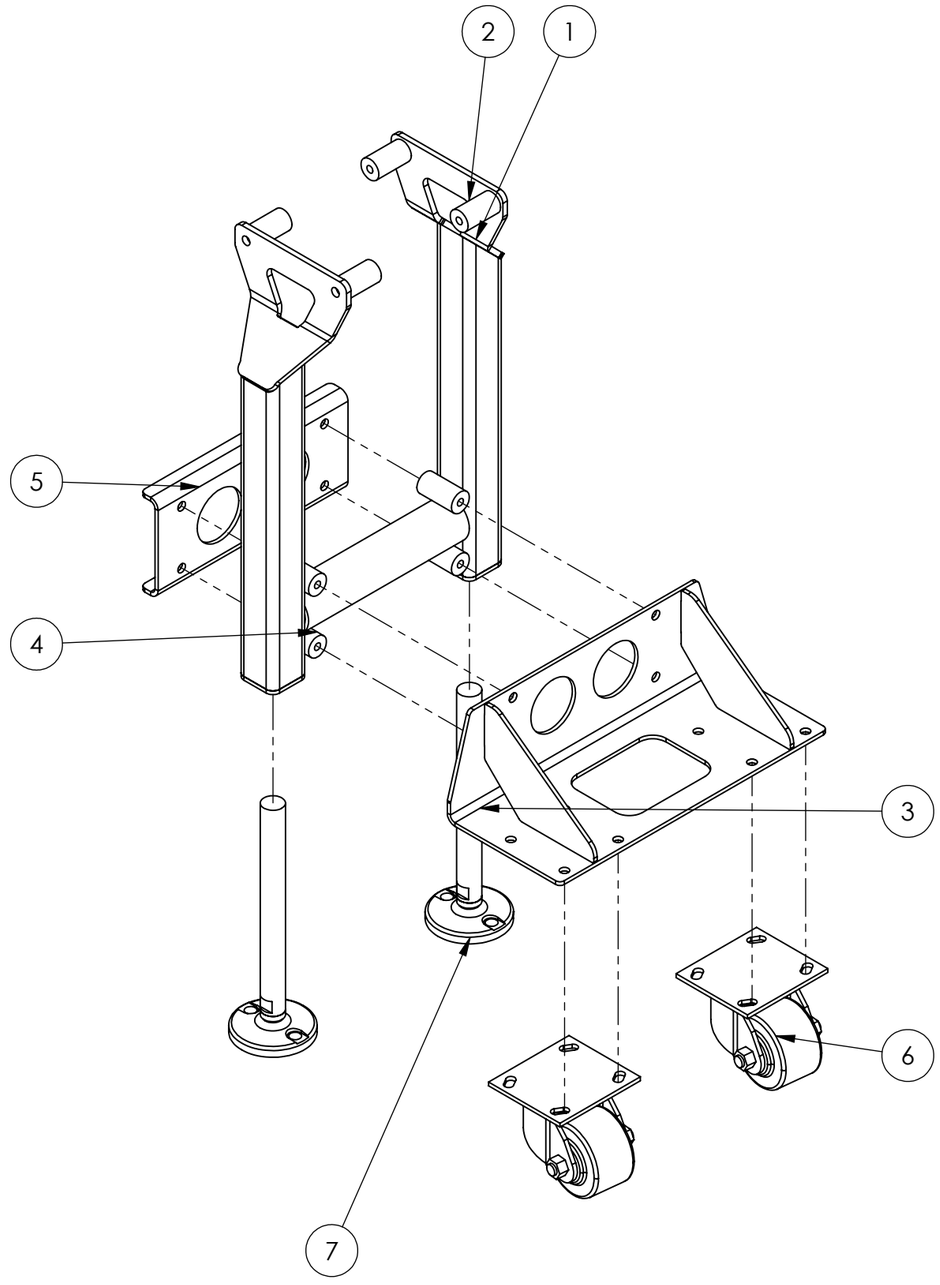

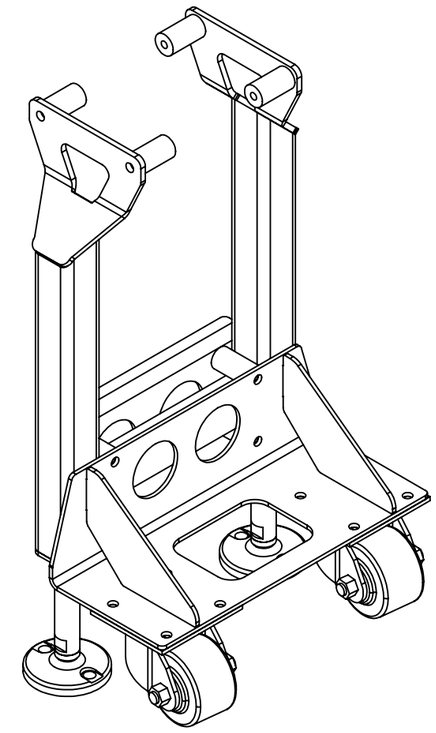

ITEM	PART NUMBER	DESCRIPTION	QTY
7	ADCO#42934	NGI HJ90 ARTICULATED FOOT, S.S., 1" UNC x 10" LG.	2
6	ADCO#	CASTER - 43209339	2
5	5304-20-125	CHANNEL - CASTER MOUNT BRACE	1
4	SPACER	M10-A-1.000-M8-1.938-M8	4
3	5304-20-124	WELDMENT - CASTER MOUNT	1
2	SPACER	M10-S-1.000-M10-1.820-M10	4
1	5624-03-131	WELDMENT - CONVEYOR LEG	1

THE INFORMATION CONTAINED IN THIS DRAWING IS THE SOLE PROPERTY OF ADCO MFG. ANY REPRODUCTION IN PART OR WHOLE WITHOUT THE WRITTEN PERMISSION OF ADCO MFG IS PROHIBITED.

10/11

ASSEMBLY - INFEED LEG

ADCO
2170 ACADEMY AVE
SANGER, CA 93657
INFO@ADCOMFG.COM
559.875.5563

DRAWN BY: JJR
DATE: 2/17/15
SCALE: 1:6
REFERENCE: -
DRAWING NUMBER: 5624-20-003
SHEET 1/1
SIZE B

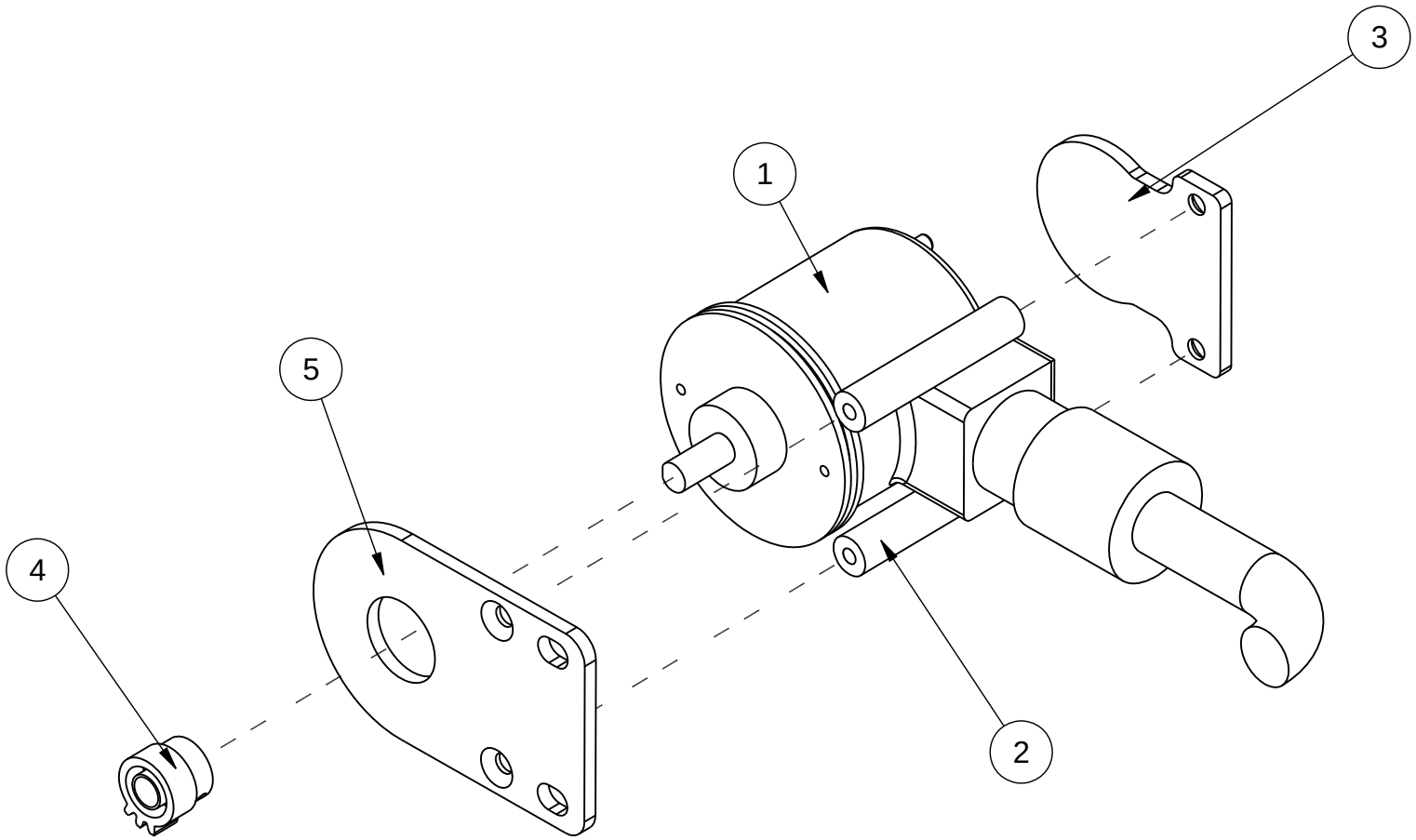

ITEM	PART NUMBER	DESCRIPTION	QTY
5	5624-21-102	ENCODER MOUNT	1
4	5598-03-157	SPUR GEAR - ENCODER	1
3	5308-17-119	PLATE, ENCODER BACK SUPPORT	1
2	SPACER	M10-S-0.500-M6-2.563-M6 (ENCODER MOUNT)	2
1	ADCO #	ENCODER, FANUC (A860-0301-T001)	1

08/13

ASSEMBLY - ENCODER - TRACK

ADCO
where products meet packaging
2170 ACADEMY AVE
SANGER, CA 93657
INFO@ADCOMFG.COM
559.875.5563

DRAWN BY: JBT | DATE: 04/09/2015 | SCALE: 1:4

REFERENCE: 5598-03-007

DRAWING NUMBER: **5624-21-002**

SHEET 1/1 | SIZE A

THE INFORMATION CONTAINED IN THIS DRAWING IS THE SOLE PROPERTY OF ADCO MANUFACTURING. ANY REPRODUCTION IN PART OR WHOLE WITHOUT WRITTEN PERMISSION OF ADCO MFG IS PROHIBITED.

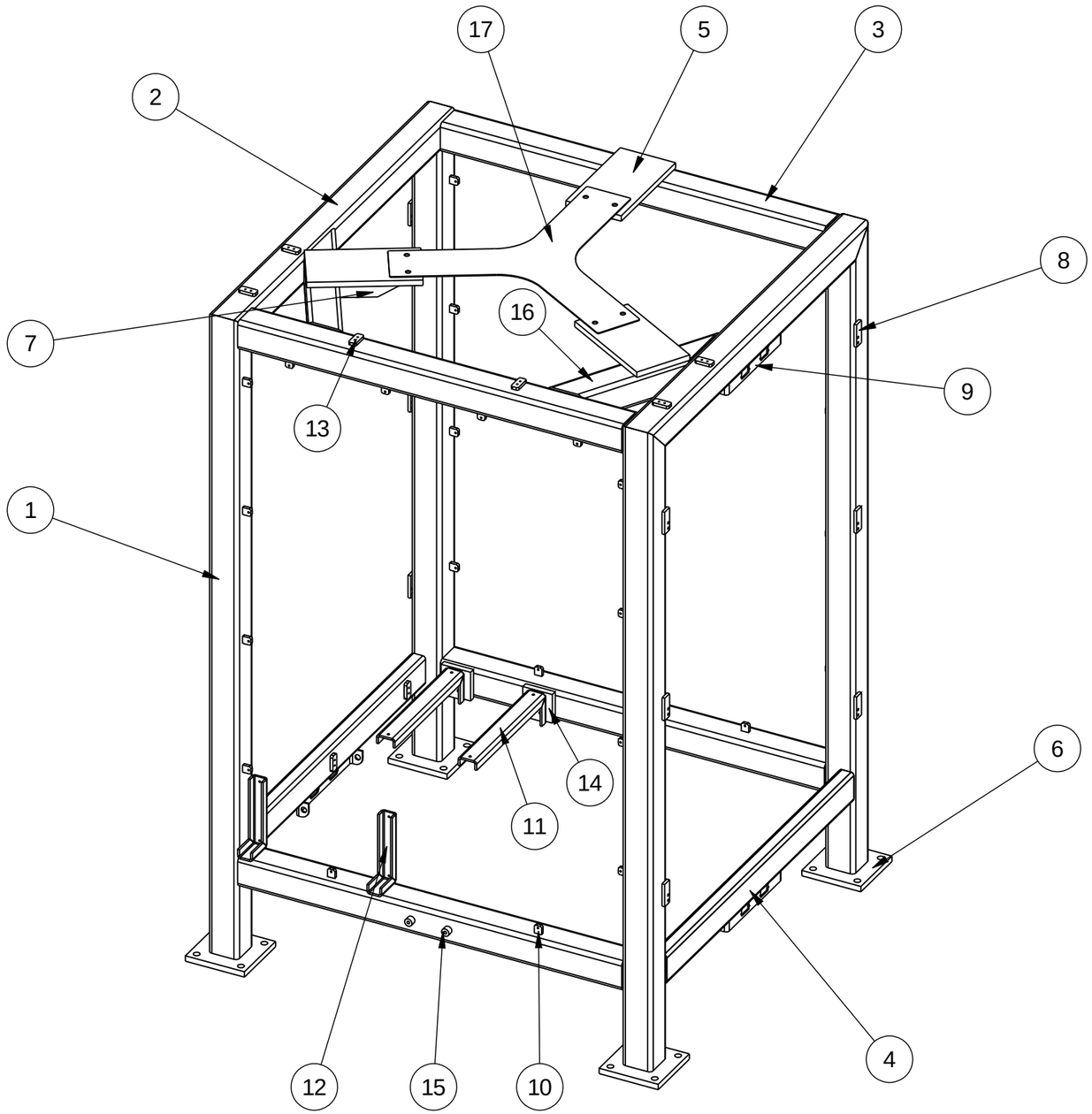

ITEM	PART NUMBER	DESCRIPTION	QTY
17	5381-01-999	FIXTURE PLATE - DELTA ROBOT	1
16	5624-22-115C	TUBE - TOP CROSS MEMBER (GUSSET - BOTH END MITER)	2
15	SPACER (M16-25.400-19.050-M10)	WELDMENT - (M16-25.400-19.050-M10)	4
14	5624-22-112C	WELDMENT - ROBOT CONTROLLER BRACKET MOUNT PADS	2
13	5598-20-115C	BOSS - WIREWAY MOUNT	13
12	5624-22-105	SUPPORT BRACKET	2
11	5624-22-104	ROBOT CONTROLLER BRACKET	2
10	806-01-116C	TAB - WINDOW MOUNT	28
9	5598-20-112C	MOUNT - DOOR SWITCH & LATCH	4
8	707-01-192C	PLATE - HINGE MOUNT SINGLE	12
7	5624-22-110C	PLATE - GUSSET	3
6	5598-20-109C	PLATE - FOOT	4
5	5624-22-109C	PLATE - ROBOT MOUNT	3
4	5624-22-111C	TUBE - BOTTOM CROSS MEMBER (END BUTT)	3
3	5598-20-104C	TUBE - TOP AND BOTTOM CROSS MEMBER (END BUTT)	4
2	5624-22-103C	TUBE - TOP CROSS MEMBER (END MITER)	2
1	5624-22-102C	TUBE - CORNER POST	4

THE INFORMATION CONTAINED IN THIS DRAWING IS THE SOLE PROPERTY OF ADCO MFG. ANY REPRODUCTION IN PART OR WHOLE WITHOUT THE WRITTEN PERMISSION OF ADCO MFG IS PROHIBITED.

10/11

ASSEMBLY - ROBOT FRAME

ADCO
2170 ACADEMY AVE
SANGER, CA 93657
INFO@ADCOMFG.COM
559.875.5563

DRAWN BY:	DATE:	SCALE:
JBT	01/16/2015	1:8

REFERENCE:	DRAWING NUMBER:	SHEET	SIZE
5598-20-000	**5624-22-001**	1/1	B

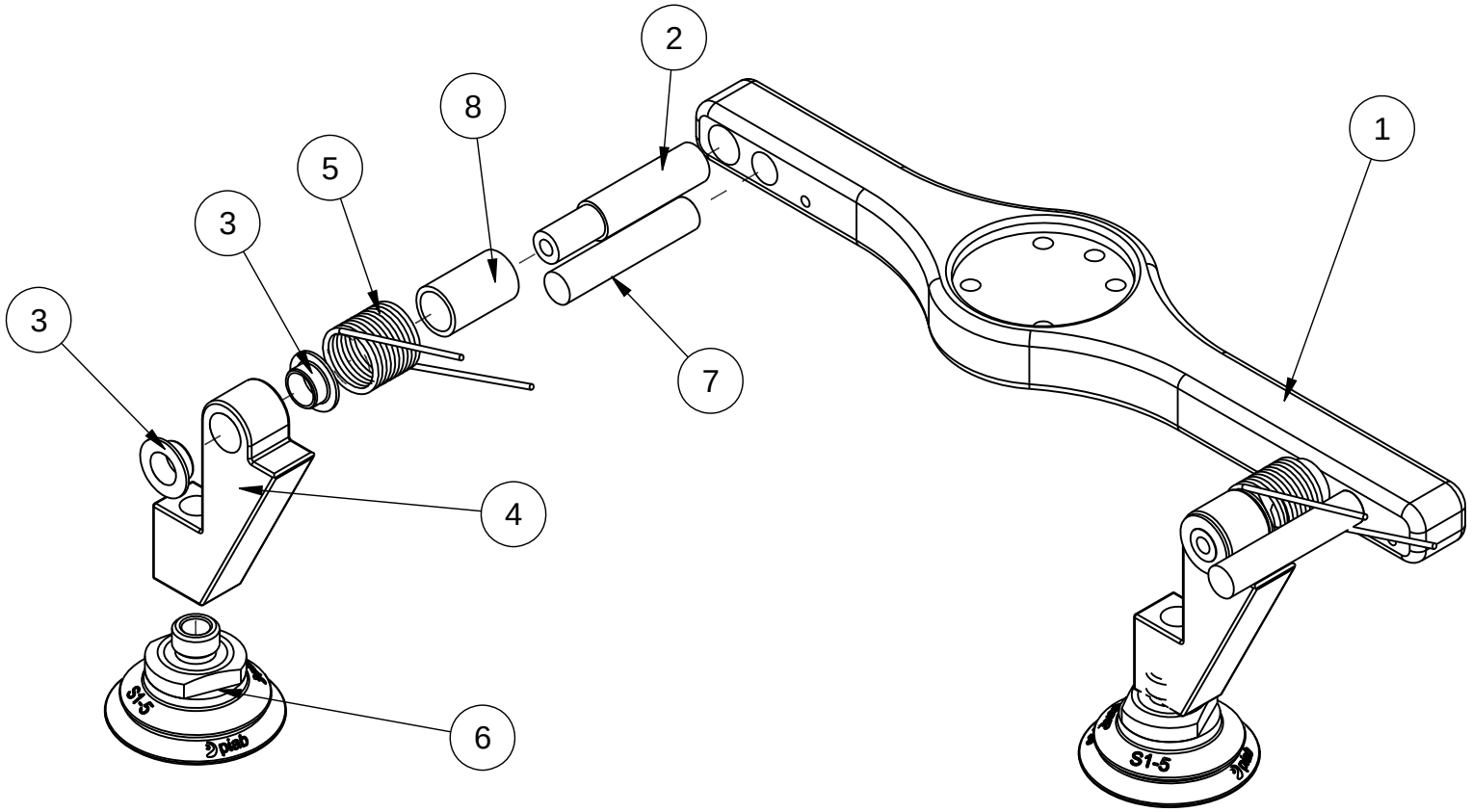

ITEM	PART NUMBER	DESCRIPTION	QTY
8	5624-23-107	BUSHING/SPRING GUIDE	2
7	M16-6.350-1.495-M5	PIVOT ARM STOPPER (EOAT)	2
6	G_S50T50_F_S1-5_G14M_00	PIAB SUCTION CUP ASSEMBLY	2
5	9287K143	TORSION SPRING	2
4	5624-23-104	PIVOT ARM (EOAT)	2
3	WFM-1012-06	BUSHING	4
2	5624-23-105	SPINDLE (EOAT)	2
1	5624-23-103	END OF ARM TOOL BASE	1

08/13

END OF ARM TOOLING ASSEMBLY

ADCO where products meet packaging
2170 ACADEMY AVE
SANGER, CA 93657
INFO@ADCOMFG.COM
559.875.5563

DRAWN BY: JBT | DATE: 03/26/15 | SCALE: 1:4

REFERENCE:

DRAWING NUMBER: **5624-23-002** | SHEET 1/1 | SIZE A

THE INFORMATION CONTAINED IN THIS DRAWING IS THE SOLE PROPERTY OF ADCO MANUFACTURING. ANY REPRODUCTION IN PART OR WHOLE WITHOUT WRITTEN PERMISSION OF ADCO MFG IS PROHIBITED.

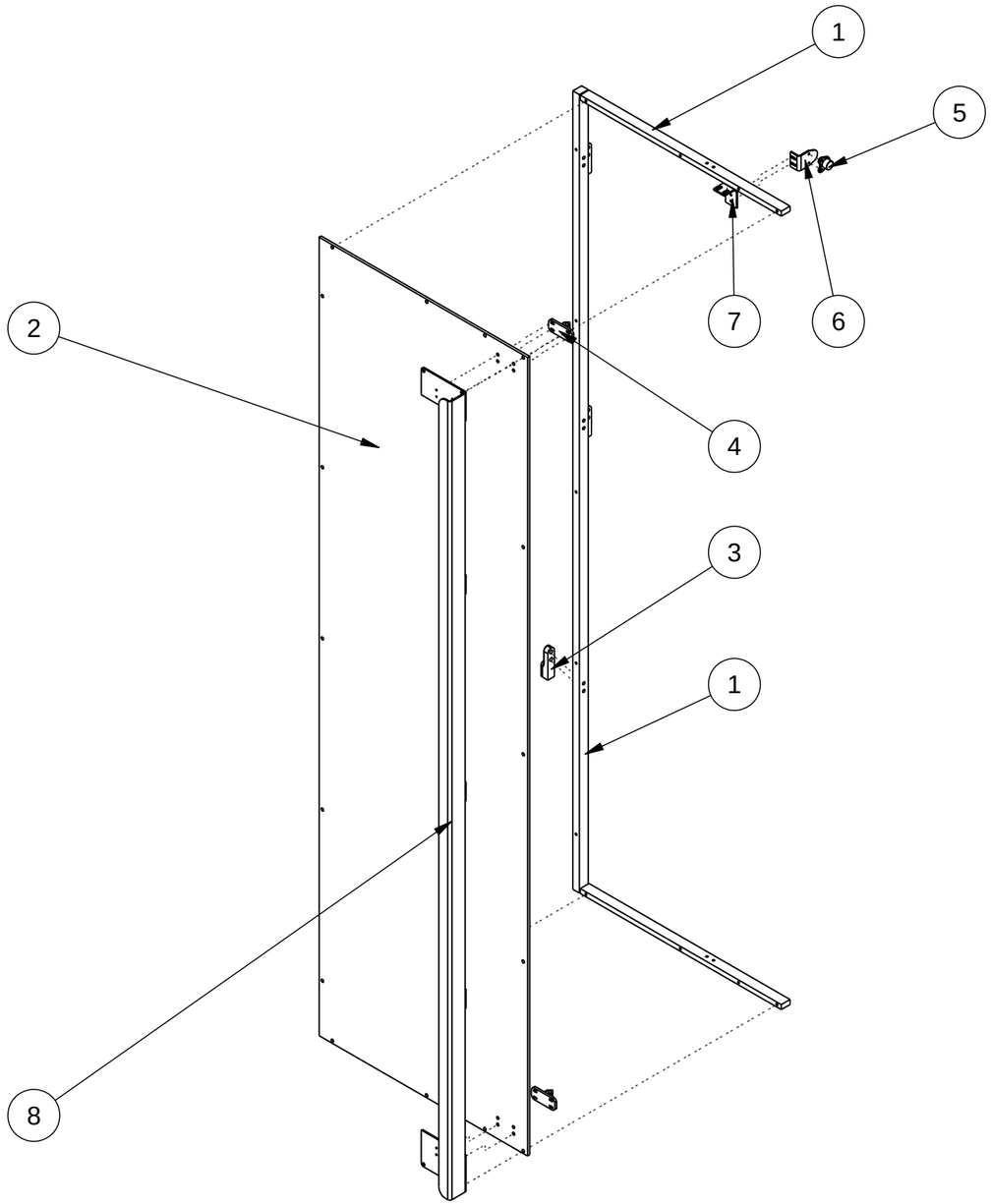

ITEM	PART NUMBER	DESCRIPTION	QTY
8	5624-24-108	HANDLE - GUARD DOOR	1
7	5624-24-111	SENSOR MOUNT	1
6	5624-24-112	DOOR SENSOR BRACKET	1
5	#440N-Z18PT	SENSAGUARD - 18MM PLASTIC ACTUATOR	1
4	ADCO# 49155	PLASTIC DOOR CATCH (MALE)	2
3	100-39-109	HINGE, UPPER GUARD DOOR	3
2	5624-24-107	WINDOW - DOOR	1
1	5624-24-101-2	WELDMENT - GUARD DOOR	1

THE INFORMATION CONTAINED IN THIS DRAWING IS THE SOLE PROPERTY OF ADCO MFG. ANY REPRODUCTION IN PART OR WHOLE WITHOUT THE WRITTEN PERMISSION OF ADCO MFG IS PROHIBITED.

10/11

ASSEMBLY - LEFT GUARD DOOR

ADCO
2170 ACADEMY AVE
SANGER, CA 93657
INFO@ADCOMFG.COM
559.875.5563

DRAWN BY: JBT | DATE: 01/21/2015 | SCALE: 1:8

REFERENCE: 5381-15-004 | DRAWING NUMBER: **5624-24-001** | SHEET 1/1 | SIZE B

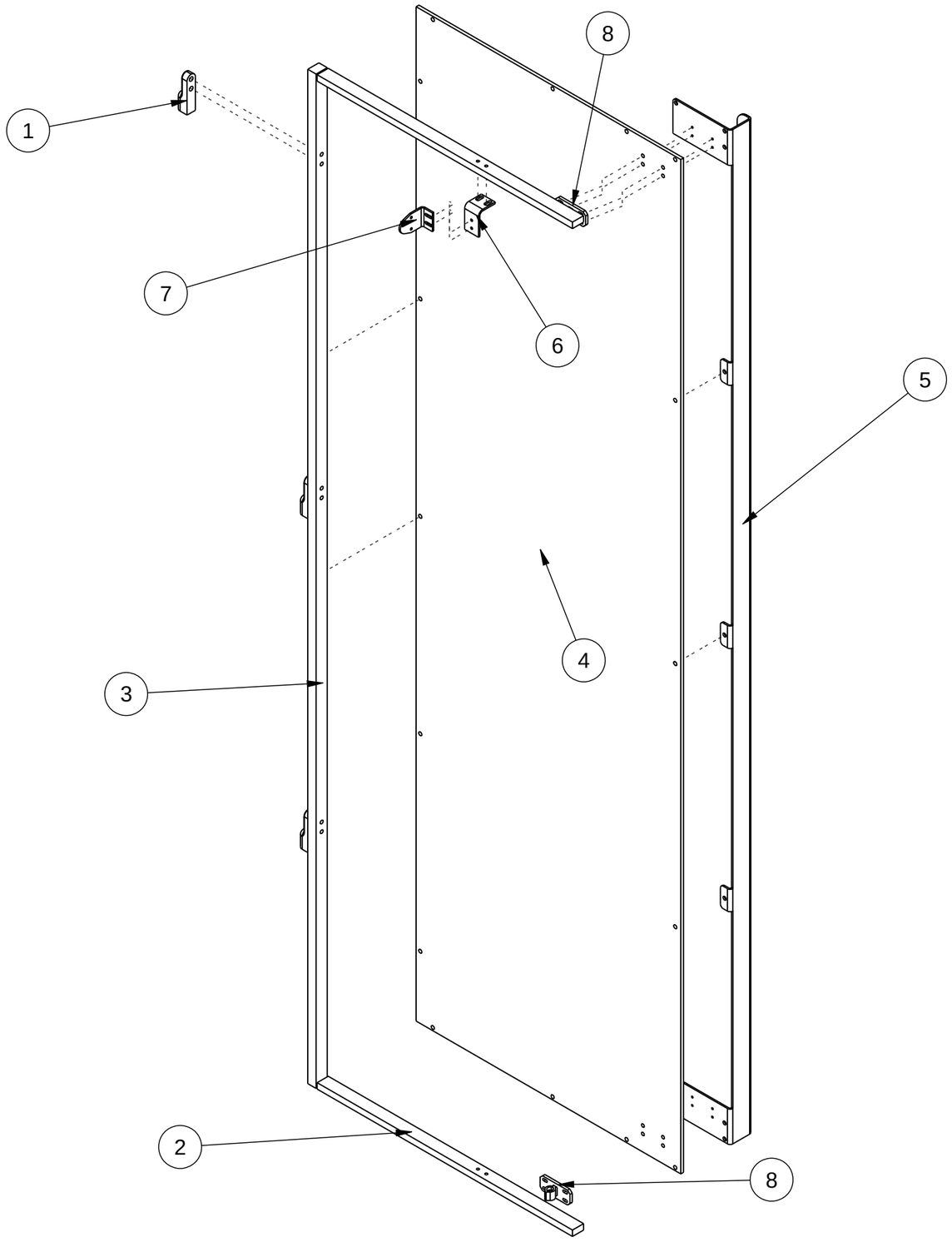

ITEM	PART NUMBER	DESCRIPTION	QTY
8	ADCO# 49155	PLASTIC DOOR CATCH (MALE)	2
7	5624-24-112	DOOR SENSOR BRACKET	1
6	5624-24-111	SENSOR MOUNT	1
5	5624-24-108	HANDLE - GUARD DOOR	1
4	5624-24-107	WINDOW - DOOR	1
3	5624-24-106C	SPINE - GUARD DOOR	1
2	5624-24-105C	BAR - TOP & BOTTOM GUARD DOOR	2
1	100-39-109	HINGE, UPPER GUARD DOOR	3

THE INFORMATION CONTAINED IN THIS DRAWING IS THE SOLE PROPERTY OF ADCO MFG. ANY REPRODUCTION IN PART OR WHOLE WITHOUT THE WRITTEN PERMISSION OF ADCO MFG IS PROHIBITED.

10/11

ASSEMBLY - RIGHT GUARD DOOR

ADCO
2170 ACADEMY AVE
SANGER, CA 93657
INFO@ADCOMFG.COM
559.875.5563

DRAWN BY: JBT
DATE: 01/21/15
SCALE: 1:8
REFERENCE:
DRAWING NUMBER: 5624-24-002
SHEET 1/1
SIZE B

Chapter 7 – Electrical Documents

This Chapter of the Service Manual contains the multiple electrical schematics, pneumatic schematics, VFD settings and many other electrical related documents that pertain to operation of machine.

Table of Contents

Chapter 7 – Electrical Documents 7-1

Machine Programming Disclaimer 7-2

Electrical Schematic Diagram 7-A

Pneumatic Schematic Diagram 7-B

Machine Programming Disclaimer

This machine is equipped with a Touch Screen HMI, Programmable Logic Controller, Programmable Automation Controller, and / or VFD Drive. These devices have been programmed with parameters or software specifically designed for this machine. While the machine is in the 12 month warranty period, any modifications to the PLC and HMI programs or VFD Parameters during that time need to be approved by ADCO Manufacturing to maintain that warranty.

ADCO recommends that backup copies of the program in the controller and HMI be made as soon as possible. Backups of all programs (PLC, HMI, etc) are included with your service manuals as shipped from the factory. It is recommended that additional backups be made when recipes are added, modified, or any other modifications to the settings on the HMI. The changed parameters for any of the VFD Drives should be recorded on the supplied parameter recording sheets supplied in this section of the manual for the changed drives.

To help ADCO service the installed ADCO machinery, please send any program modifications to ADCO so tech support can diagnose any issues that may arise. If there are any questions relating to the programming of this machine, please contact ADCO Manufacturing's Electrical Engineering Department.

ADCO Electrical Engineering Department
Tel: 559-875-5563
Fax: 559-875-7665
Email: info@adcomfg.com

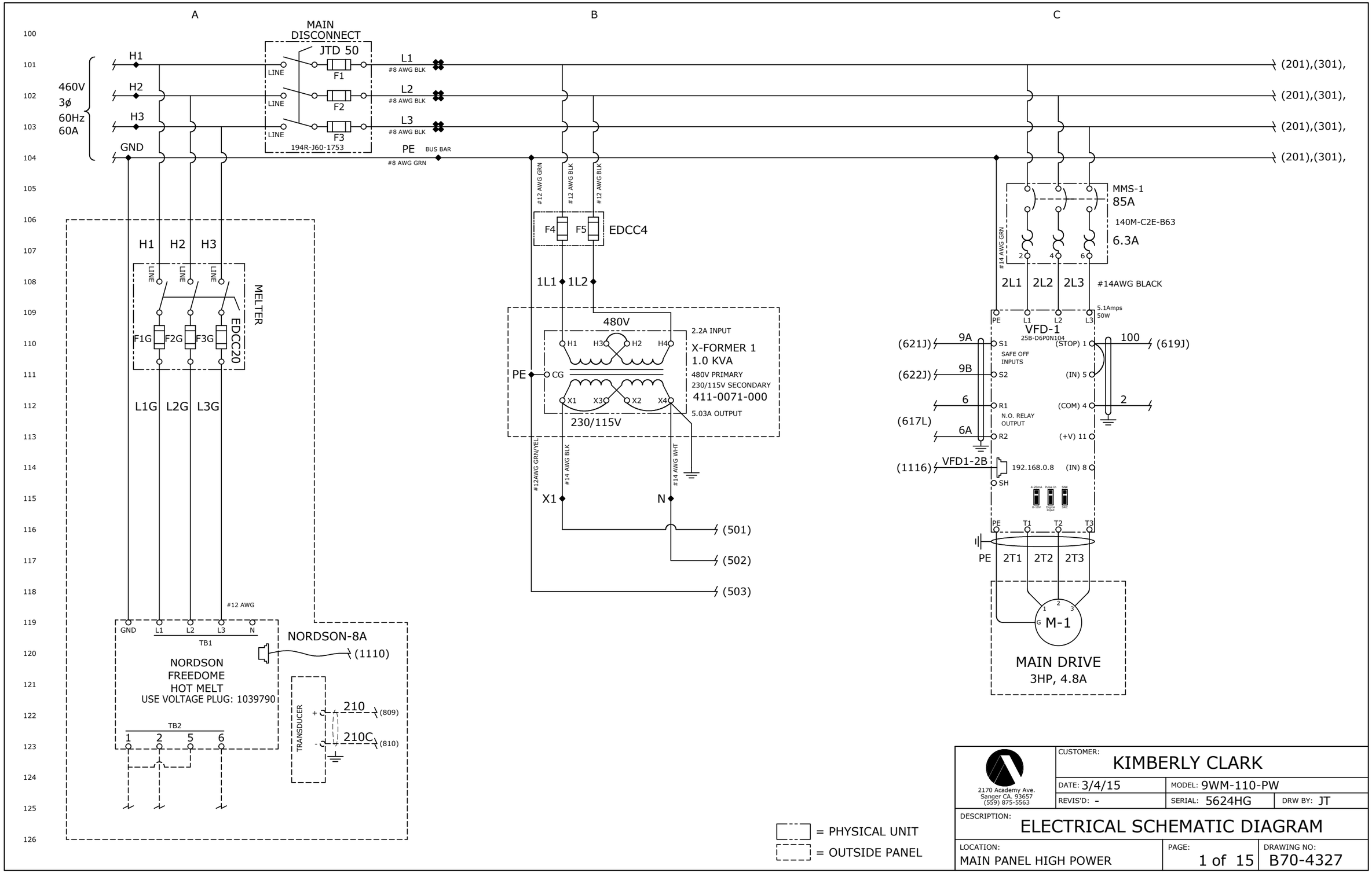

= PHYSICAL UNIT

= OUTSIDE PANEL

2170 Academy Ave.
Sanger CA. 93657
(559) 875-5563

CUSTOMER: KIMBERLY CLARK		
DATE: 3/4/15	MODEL: 9WM-110-PW	
REVIS'D: -	SERIAL: 5624HG	DRW BY: JT
DESCRIPTION: ELECTRICAL SCHEMATIC DIAGRAM		
LOCATION: MAIN PANEL HIGH POWER	PAGE: 1 of 15	DRAWING NO: B70-4327

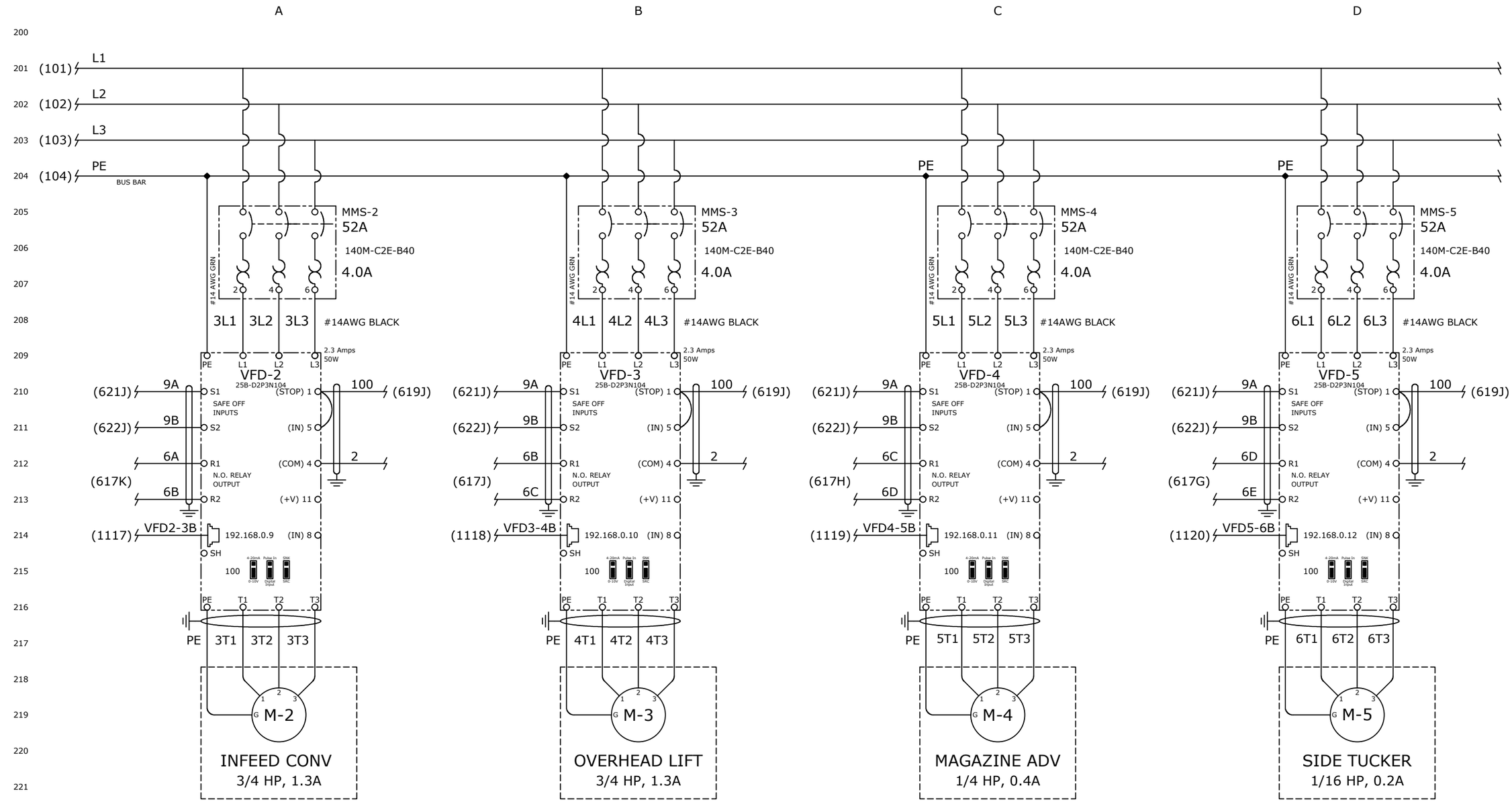

= PHYSICAL UNIT

= OUTSIDE PANEL

2170 Academy Ave.
Sanger CA. 93657
(559) 875-5563

CUSTOMER: KIMBERLY CLARK		
DATE: 3/4/15	MODEL: 9WM-110-PW	
REVIS'D: -	SERIAL: 5624HG	DRW BY: JT
DESCRIPTION: ELECTRICAL SCHEMATIC DIAGRAM		
LOCATION: MAIN PANEL HIGH POWER	PAGE: 2 of 15	DRAWING NO: B70-4327

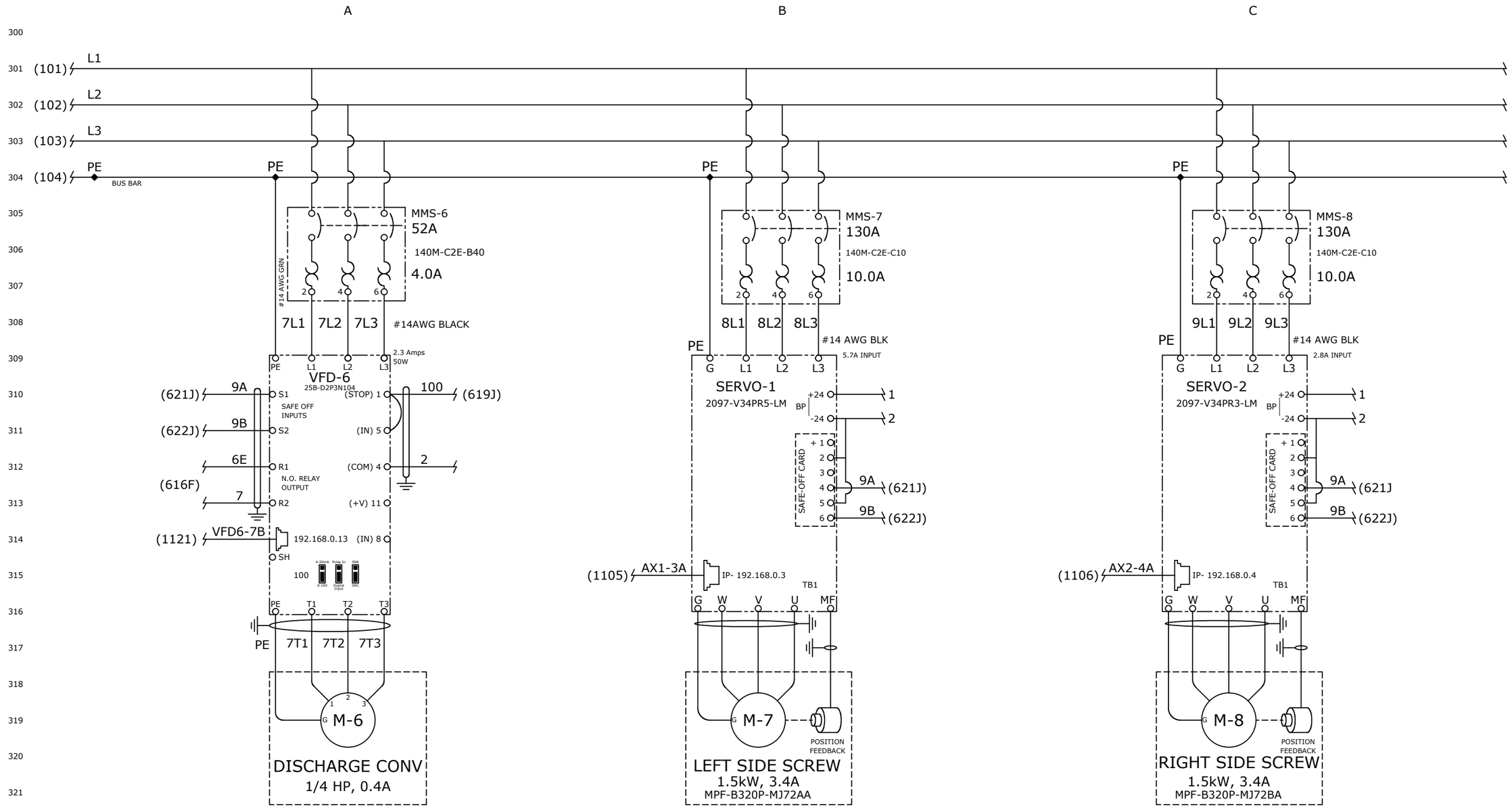

QDB-7

= PHYSICAL UNIT

= OUTSIDE PANEL

2170 Academy Ave.
Sanger CA. 93657
(559) 875-5563

CUSTOMER: KIMBERLY CLARK		
DATE: 3/4/15	MODEL: 9WM-110-PW	
REVIS'D: -	SERIAL: 5624HG	DRW BY: JT
DESCRIPTION: ELECTRICAL SCHEMATIC DIAGRAM		
LOCATION: MAIN PANEL HIGH POWER	PAGE: 3 of 15	DRAWING NO: B70-4327

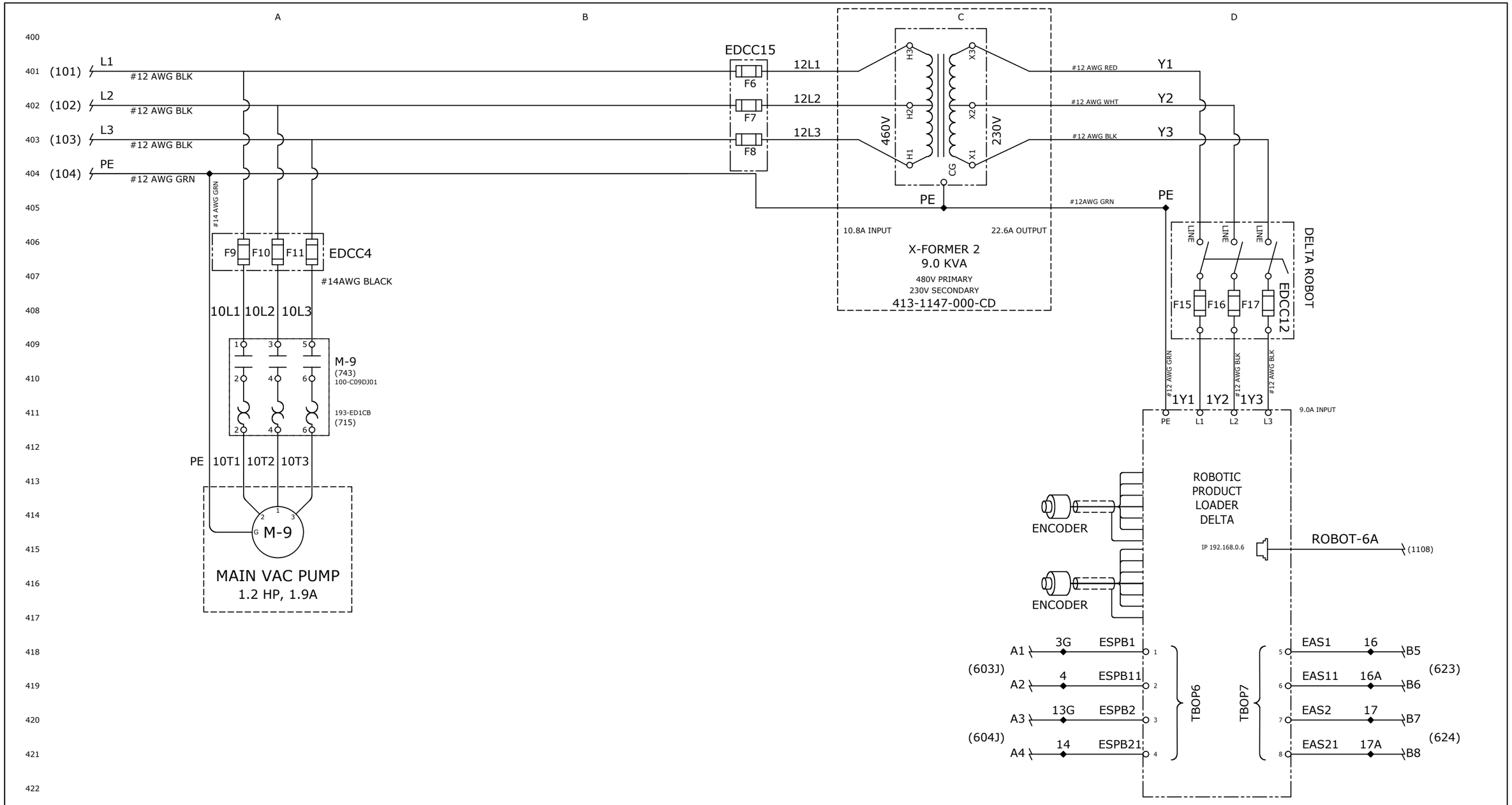

SEE PG 14 FOR CONNECTION DETAILS

2170 Academy Ave.
Sanger CA. 93657
(559) 875-5563

CUSTOMER: KIMBERLY CLARK		
DATE: 3/4/15	MODEL: 9WM-110-PW	
REVIS'D: 3/18/15	SERIAL: 5624HG	DRW BY: JT
DESCRIPTION: ELECTRICAL SCHEMATIC DIAGRAM		
LOCATION: MAIN PANEL, ROBOT POWER	PAGE: 4 of 15	DRAWING NO: B70-4327

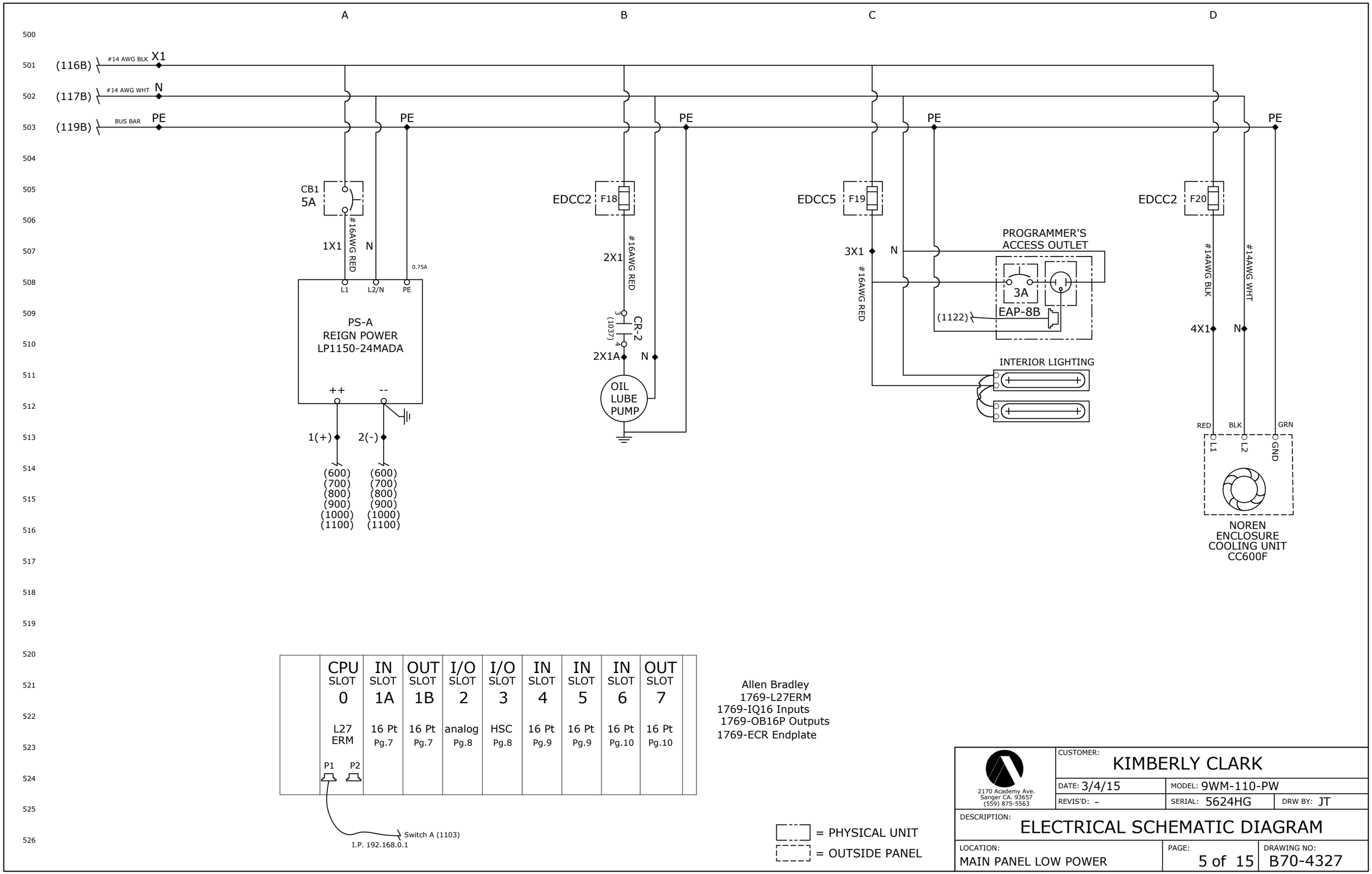

2170 Academy Ave.
Sanger CA. 93657
(559) 875-5563

CUSTOMER: KIMBERLY CLARK

DATE: 3/4/15 | MODEL: 9WM-110-PW

REVIS'D: - | SERIAL: 5624HG | DRW BY: JT

DESCRIPTION: ELECTRICAL SCHEMATIC DIAGRAM

LOCATION: MAIN PANEL LOW POWER | PAGE: 5 of 15 | DRAWING NO: B70-4327

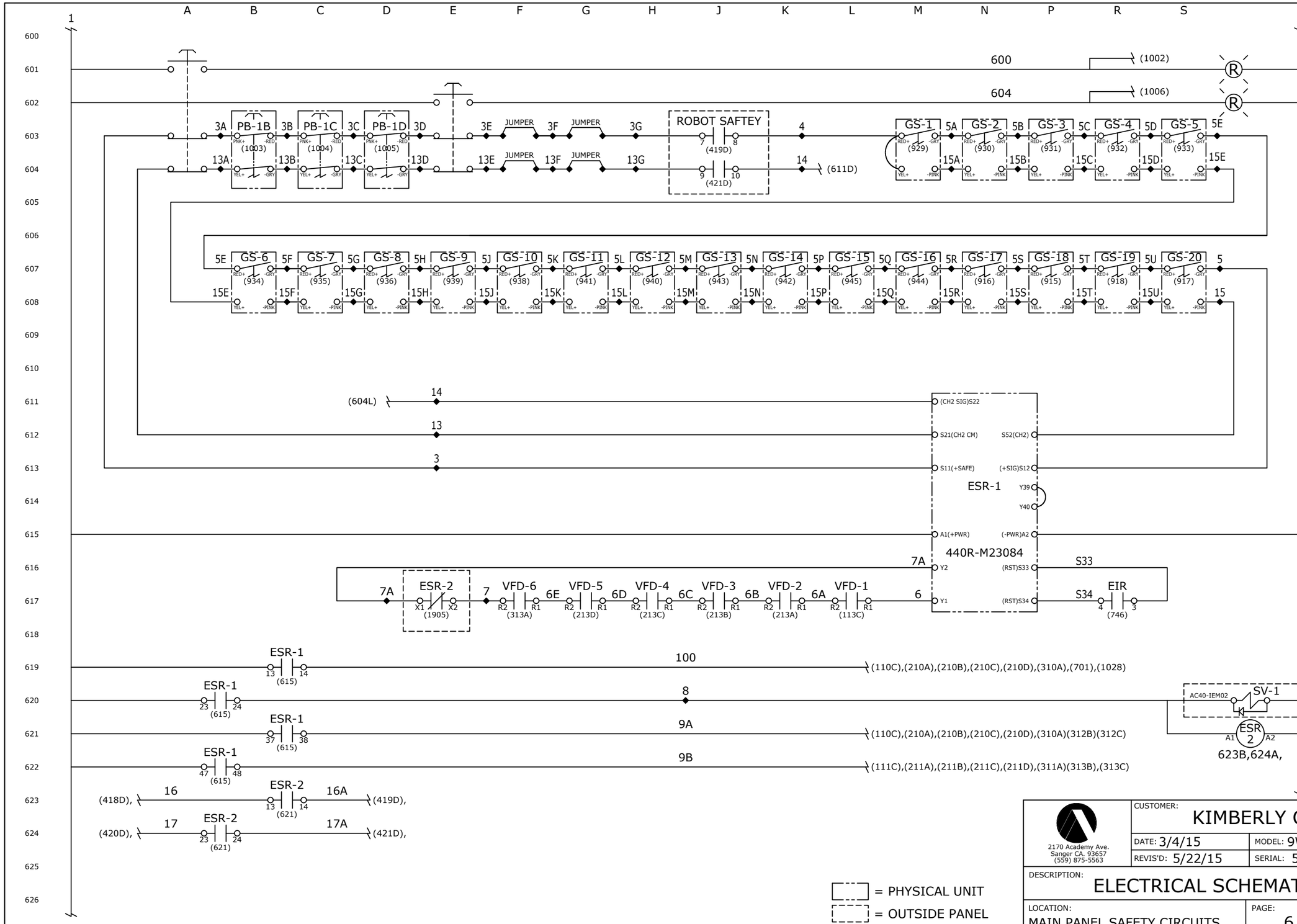

2170 Academy Ave.
Sanger CA. 93657
(559) 875-5563

CUSTOMER: KIMBERLY CLARK			
DATE: 3/4/15	MODEL: 9WM-110-PW		
REVIS'D: 5/22/15	SERIAL: 5624HG	DRW BY: JT	
DESCRIPTION: ELECTRICAL SCHEMATIC DIAGRAM			
LOCATION: MAIN PANEL SAFETY CIRCUITS	PAGE: 6 of 15	DRAWING NO: B70-4327	

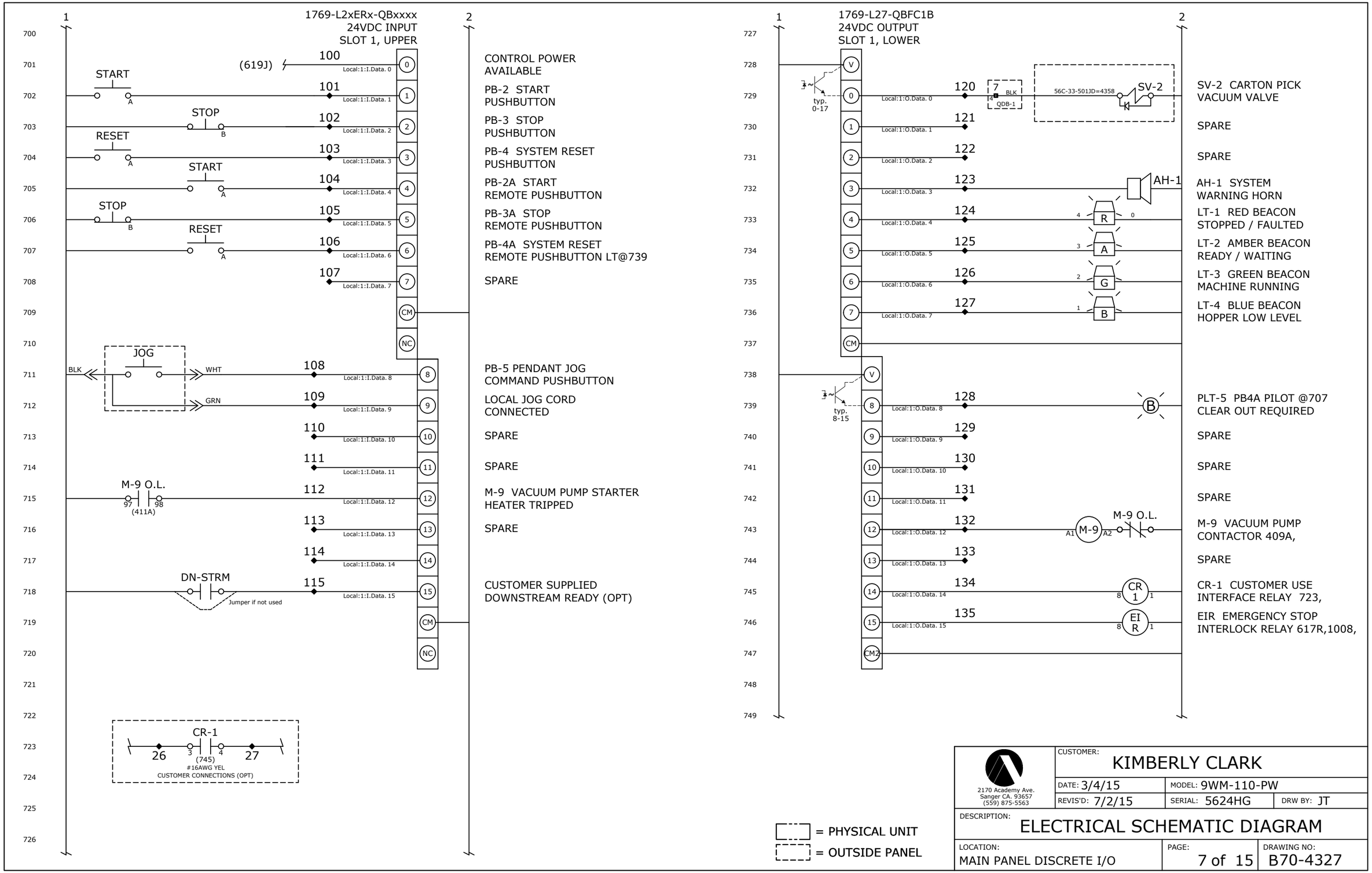
1769-L2xERx-QBxxxx
24VDC INPUT
SLOT 1, UPPER
(619J)
100
Local:1:I.Data. 0
START
101
Local:1:I.Data. 1
STOP
102
Local:1:I.Data. 2
RESET
103
Local:1:I.Data. 3
START
104
Local:1:I.Data. 4
STOP
105
Local:1:I.Data. 5
RESET
106
Local:1:I.Data. 6
107
Local:1:I.Data. 7
CONTROL POWER AVAILABLE
PB-2 START PUSHBUTTON
PB-3 STOP PUSHBUTTON
PB-4 SYSTEM RESET PUSHBUTTON
PB-2A START REMOTE PUSHBUTTON
PB-3A STOP REMOTE PUSHBUTTON
PB-4A SYSTEM RESET REMOTE PUSHBUTTON LT@739
SPARE
JOG
BLK
WHT
GRN
108
Local:1:I.Data. 8
109
Local:1:I.Data. 9
110
Local:1:I.Data. 10
111
Local:1:I.Data. 11
M-9 O.L.
97
98
(411A)
112
Local:1:I.Data. 12
113
Local:1:I.Data. 13
114
Local:1:I.Data. 14
DN-STRM
Jumper if not used
115
Local:1:I.Data. 15
PB-5 PENDANT JOG COMMAND PUSHBUTTON
LOCAL JOG CORD CONNECTED
SPARE
SPARE
M-9 VACUUM PUMP STARTER HEATER TRIPPED
SPARE
CUSTOMER SUPPLIED DOWNSTREAM READY (OPT)
CR-1
26
3
(745)
4
27
#16AWG YEL
CUSTOMER CONNECTIONS (OPT)
1769-L27-QBFC1B
24VDC OUTPUT
SLOT 1, LOWER
typ. 0-17
Local:1:O.Data. 0
120
7
BLK
4
QDB-1
56C-33-501JD=4358
SV-2
SV-2 CARTON PICK VACUUM VALVE
Local:1:O.Data. 1
121
SPARE
Local:1:O.Data. 2
122
SPARE
Local:1:O.Data. 3
123
AH-1
AH-1 SYSTEM WARNING HORN
Local:1:O.Data. 4
124
R
LT-1 RED BEACON STOPPED / FAULTED
Local:1:O.Data. 5
125
A
LT-2 AMBER BEACON READY / WAITING
Local:1:O.Data. 6
126
G
LT-3 GREEN BEACON MACHINE RUNNING
Local:1:O.Data. 7
127
B
LT-4 BLUE BEACON HOPPER LOW LEVEL
typ. 8-15
Local:1:O.Data. 8
128
PLT-5 PB4A PILOT @707 CLEAR OUT REQUIRED
Local:1:O.Data. 9
129
SPARE
Local:1:O.Data. 10
130
SPARE
Local:1:O.Data. 11
131
SPARE
Local:1:O.Data. 12
132
M-9
A1
A2
M-9 O.L.
M-9 VACUUM PUMP CONTACTOR 409A,
Local:1:O.Data. 13
133
SPARE
Local:1:O.Data. 14
134
CR 1
CR-1 CUSTOMER USE INTERFACE RELAY 723,
Local:1:O.Data. 15
135
EI R
EIR EMERGENCY STOP INTERLOCK RELAY 617R,1008,
= PHYSICAL UNIT
= OUTSIDE PANEL
2170 Academy Ave.
Sanger CA. 93657
(559) 875-5563
CUSTOMER:
KIMBERLY CLARK
DATE: 3/4/15
MODEL: 9WM-110-PW
REVIS'D: 7/2/15
SERIAL: 5624HG
DRW BY: JT
DESCRIPTION:
ELECTRICAL SCHEMATIC DIAGRAM
LOCATION:
MAIN PANEL DISCRETE I/O
PAGE:
7 of 15
DRAWING NO:
B70-4327

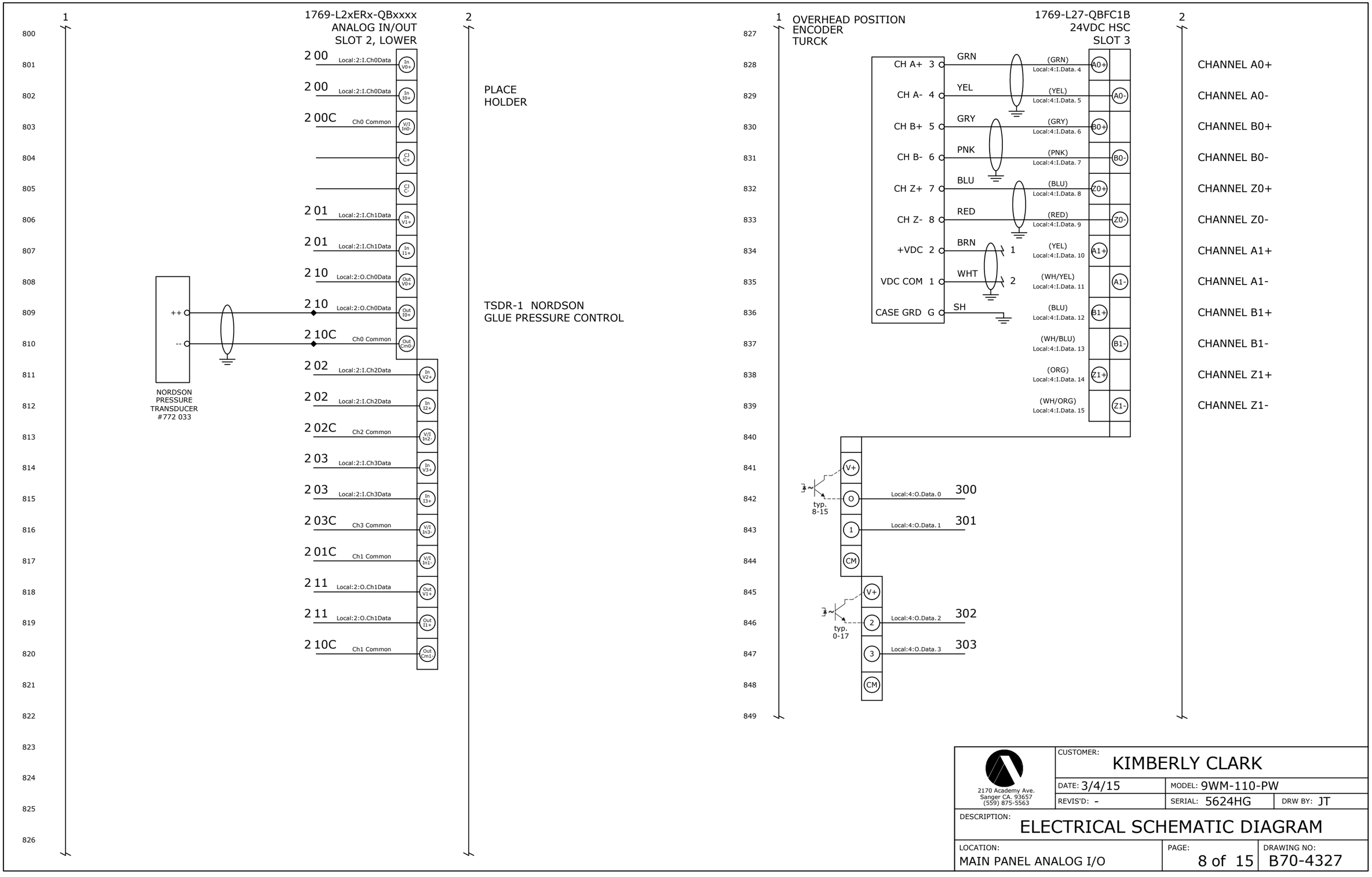
1769-L2xERx-QBxxxx
ANALOG IN/OUT
SLOT 2, LOWER
2 00 Local:2:I.Ch0Data
2 00 Local:2:I.Ch0Data
2 00C Ch0 Common
2 01 Local:2:I.Ch1Data
2 01 Local:2:I.Ch1Data
2 10 Local:2:O.Ch0Data
2 10 Local:2:O.Ch0Data
2 10C Ch0 Common
2 02 Local:2:I.Ch2Data
2 02 Local:2:I.Ch2Data
2 02C Ch2 Common
2 03 Local:2:I.Ch3Data
2 03 Local:2:I.Ch3Data
2 03C Ch3 Common
2 01C Ch1 Common
2 11 Local:2:O.Ch1Data
2 11 Local:2:O.Ch1Data
2 10C Ch1 Common
++
--
NORDSON
PRESSURE
TRANSDUCER
#772 033
PLACE
HOLDER
TSDR-1 NORDSON
GLUE PRESSURE CONTROL
OVERHEAD POSITION
ENCODER
TURCK
1769-L27-QBFC1B
24VDC HSC
SLOT 3
CH A+ 3
CH A- 4
CH B+ 5
CH B- 6
CH Z+ 7
CH Z- 8
+VDC 2
VDC COM 1
CASE GRD G
GRN
YEL
GRY
PNK
BLU
RED
BRN
WHT
SH
(GRN) Local:4:I.Data. 4
(YEL) Local:4:I.Data. 5
(GRY) Local:4:I.Data. 6
(PNK) Local:4:I.Data. 7
(BLU) Local:4:I.Data. 8
(RED) Local:4:I.Data. 9
(YEL) Local:4:I.Data. 10
(WH/YEL) Local:4:I.Data. 11
(BLU) Local:4:I.Data. 12
(WH/BLU) Local:4:I.Data. 13
(ORG) Local:4:I.Data. 14
(WH/ORG) Local:4:I.Data. 15
A0+
A0-
B0+
B0-
Z0+
Z0-
A1+
A1-
B1+
B1-
Z1+
Z1-
CHANNEL A0+
CHANNEL A0-
CHANNEL B0+
CHANNEL B0-
CHANNEL Z0+
CHANNEL Z0-
CHANNEL A1+
CHANNEL A1-
CHANNEL B1+
CHANNEL B1-
CHANNEL Z1+
CHANNEL Z1-
V+
O
1
CM
Local:4:O.Data. 0
Local:4:O.Data. 1
Local:4:O.Data. 2
Local:4:O.Data. 3
300
301
302
303
typ.
8-15
typ.
0-17
2170 Academy Ave.
Sanger CA. 93657
(559) 875-5563
CUSTOMER:
KIMBERLY CLARK
DATE: 3/4/15
MODEL: 9WM-110-PW
REVIS'D: -
SERIAL: 5624HG
DRW BY: JT
DESCRIPTION:
ELECTRICAL SCHEMATIC DIAGRAM
LOCATION:
MAIN PANEL ANALOG I/O
PAGE:
8 of 15
DRAWING NO:
B70-4327

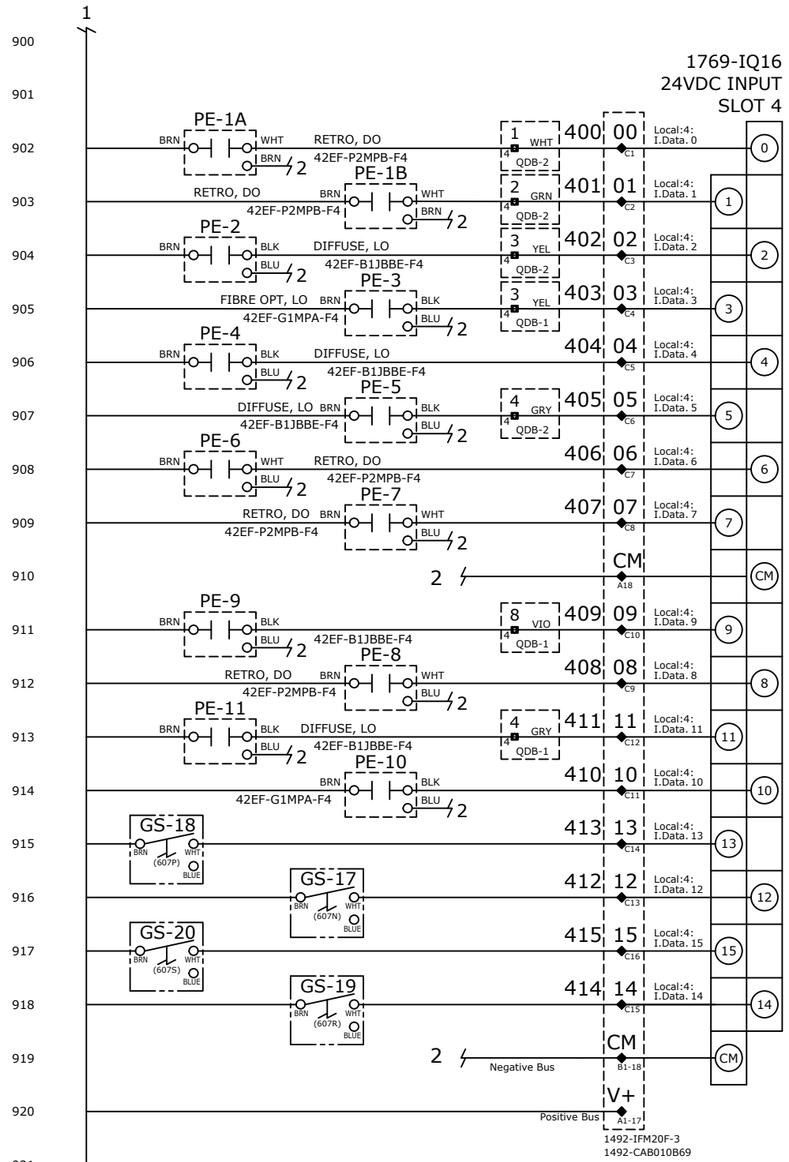

PE-1A PROD SINGLE PRESENT
VACUUM PICK CONTROL

PE-1B PROD DOUBLE PRESENT
VACUUM PICK CONTROL

PE-2 CARTON PRESENT
PICK CONFIRM

PE-3 GLUE PATTERN
CONTROL ENABLE

PE-4 PRODUCT AT SCREW
SCREW ADVANCE

PE-5 MAGAZINE LOW LEVEL
LOW MAGAZINE ALARM

PE-6 DOWNSTREAM
BACKUP (AREA FULL)

PE-7 MID SPEED
MID SPEED ENABLE

PE-9 DOUBLE STACK DETECT
BLOW OFF ENABLE

PE-8 HIGH SPEED
HIGH SPEED ENABLE

PE-11 DISCHARGE BLOW OFF
PRODUCT PRESENT

PE-10 CUPS AT INFEED TRIGGER
PICK / PLACE ENABLE

GS-18 GUARD DOOR
OPEN SWITCH

GS-17 GUARD DOOR
OPEN SWITCH

GS-20 GUARD DOOR
OPEN SWITCH

GS-19 GUARD DOOR
OPEN SWITCH

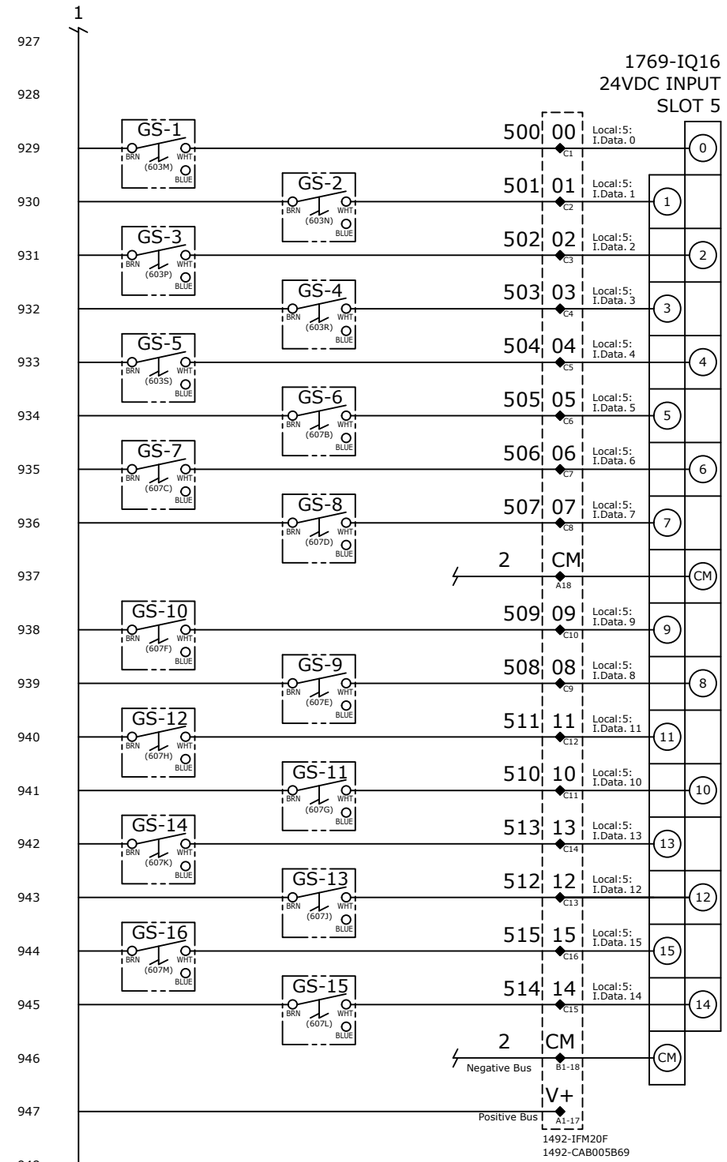

GS-1 GUARD DOOR
OPEN SWITCH

GS-2 GUARD DOOR
OPEN SWITCH

GS-3 GUARD DOOR
OPEN SWITCH

GS-4 GUARD DOOR
OPEN SWITCH

GS-5 GUARD DOOR
OPEN SWITCH

GS-6 GUARD DOOR
OPEN SWITCH

GS-7 GUARD DOOR
OPEN SWITCH

GS-8 GUARD DOOR
OPEN SWITCH

GS-10 GUARD DOOR
OPEN SWITCH

GS-9 GUARD DOOR
OPEN SWITCH

GS-12 GUARD DOOR
OPEN SWITCH

GS-11 GUARD DOOR
OPEN SWITCH

GS-14 GUARD DOOR
OPEN SWITCH

GS-13 GUARD DOOR
OPEN SWITCH

GS-16 GUARD DOOR
OPEN SWITCH

GS-15 GUARD DOOR
OPEN SWITCH

= PHYSICAL UNIT

= OUTSIDE PANEL

2170 Academy Ave.
Sanger CA. 93657
(559) 875-5563

CUSTOMER: KIMBERLY CLARK			
DATE: 3/4/15	MODEL: 9WM-110-PW		
REVIS'D: 5/22/15	SERIAL: 5624HG	DRW BY: JT	
DESCRIPTION: ELECTRICAL SCHEMATIC DIAGRAM			
LOCATION: MAIN PANEL, DISCRETE I/O	PAGE: 9 of 15	DRAWING NO: B70-4327	

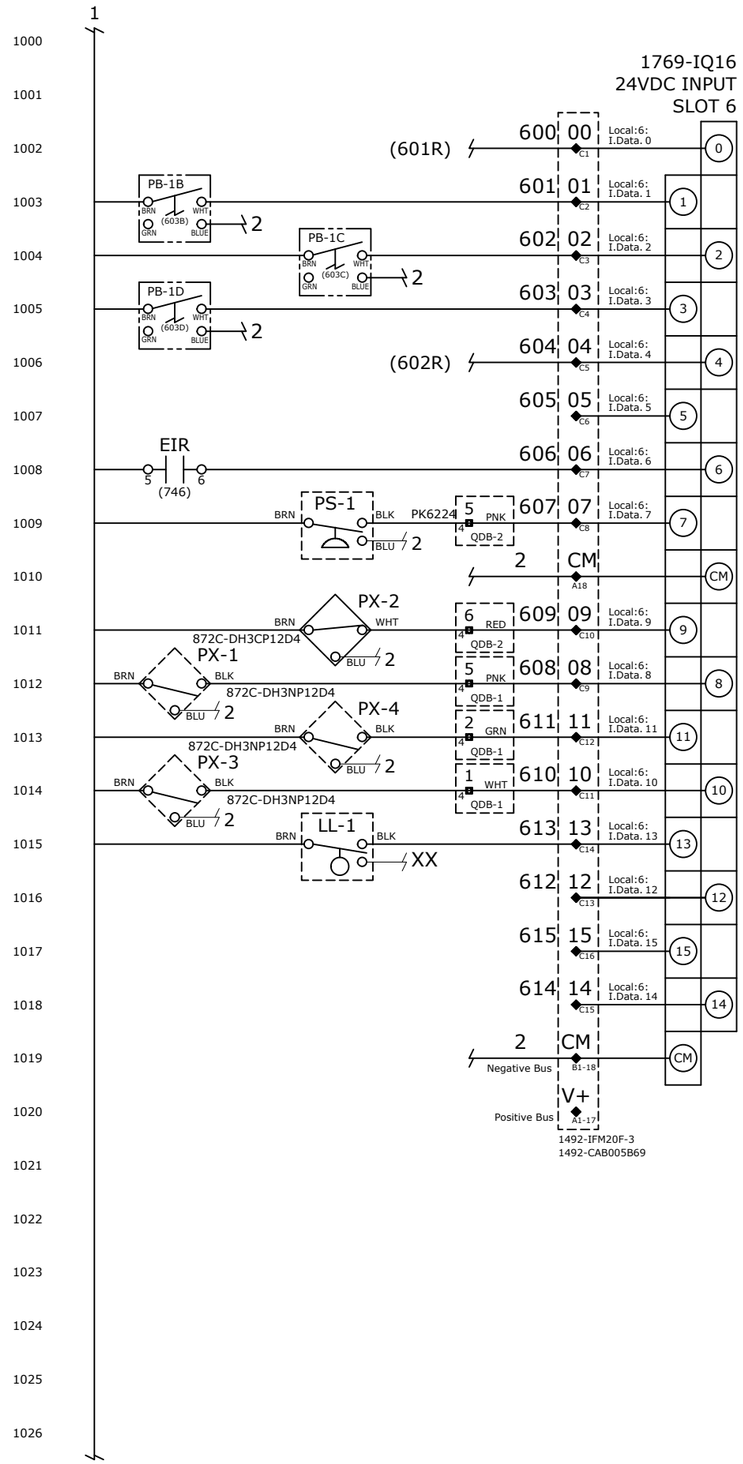

PB-1A MAIN OPERATOR
E-STOP DOWN

PB-1B ELECTRICAL PANEL
E-STOP DOWN

PB-1C DISCHARGE
E-STOP DOWN

PB-1D LH HOPPER
E-STOP DOWN

PB-1E REMOTE STATION
E-STOP DOWN

SPARE

EIR ESR RESET
RELAY OUTPUT MIRROR

PS-1 MAIN AIR
PRESSURE SWITCH

PX-2 MAGAZINE ADVANCE
LEVEL CONTROL

PX-1 MAIN DRIVE DETENT
OVERLOAD SENSOR

PX-4 OVERHEAD LUGS
LOWER TRAVEL LIMIT

PX-3 OVERHEAD LUGS
UPPER TRAVEL LIMIT

LL-1 OIL LUBE
LOW LEVEL SWITCH

SPARE

SPARE

SPARE

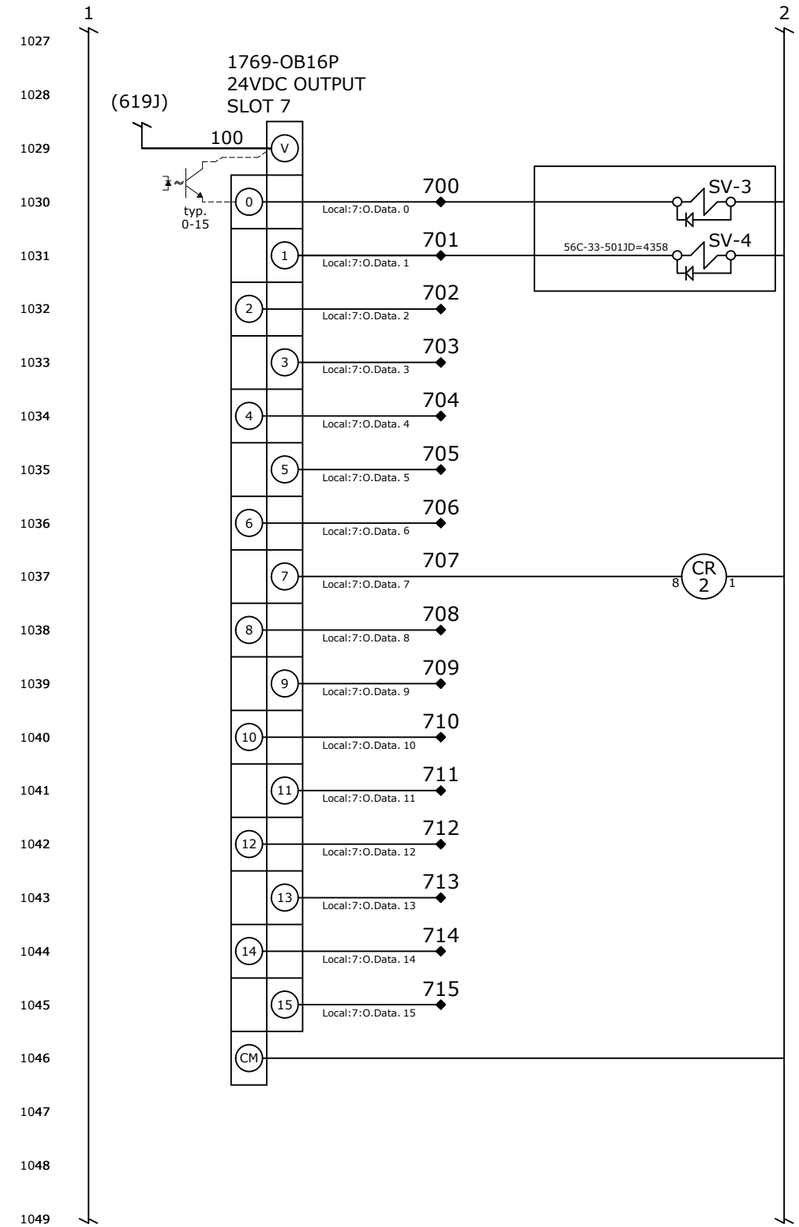

SV-3 GLUE GUN
GLUE UNIT

SV-4 OUTFEED PROD BLOW OFF
OUTFEED PRODUCT BLOW OFF

SPARE

SPARE

SPARE

SPARE

SPARE

CR-2 OIL AUTO-LUBE
RUN RELAY 509B,

SPARE

SPARE

SPARE

SPARE

SPARE

SPARE

SPARE

SPARE

= PHYSICAL UNIT

= OUTSIDE PANEL

2170 Academy Ave.
Sanger CA. 93657
(559) 875-5563

CUSTOMER: KIMBERLY CLARK

DATE: 3/4/15 | MODEL: 9WM-110-PW

REVIS'D: - | SERIAL: 5624HG | DRW BY: JT

DESCRIPTION: ELECTRICAL SCHEMATIC DIAGRAM

LOCATION: MAIN PANEL, DISCRETE I/O | PAGE: 10 of 15 | DRAWING NO: B70-4327

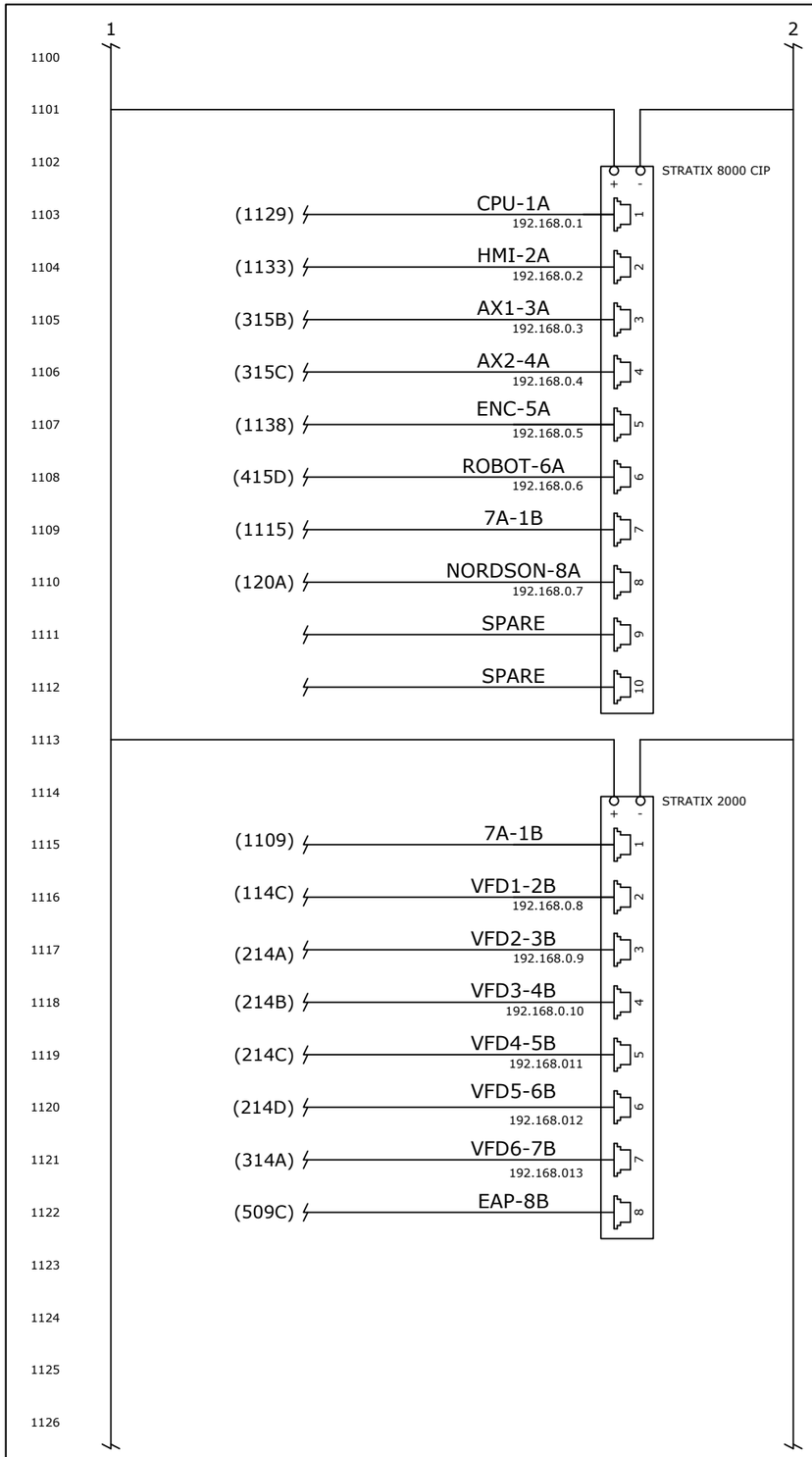

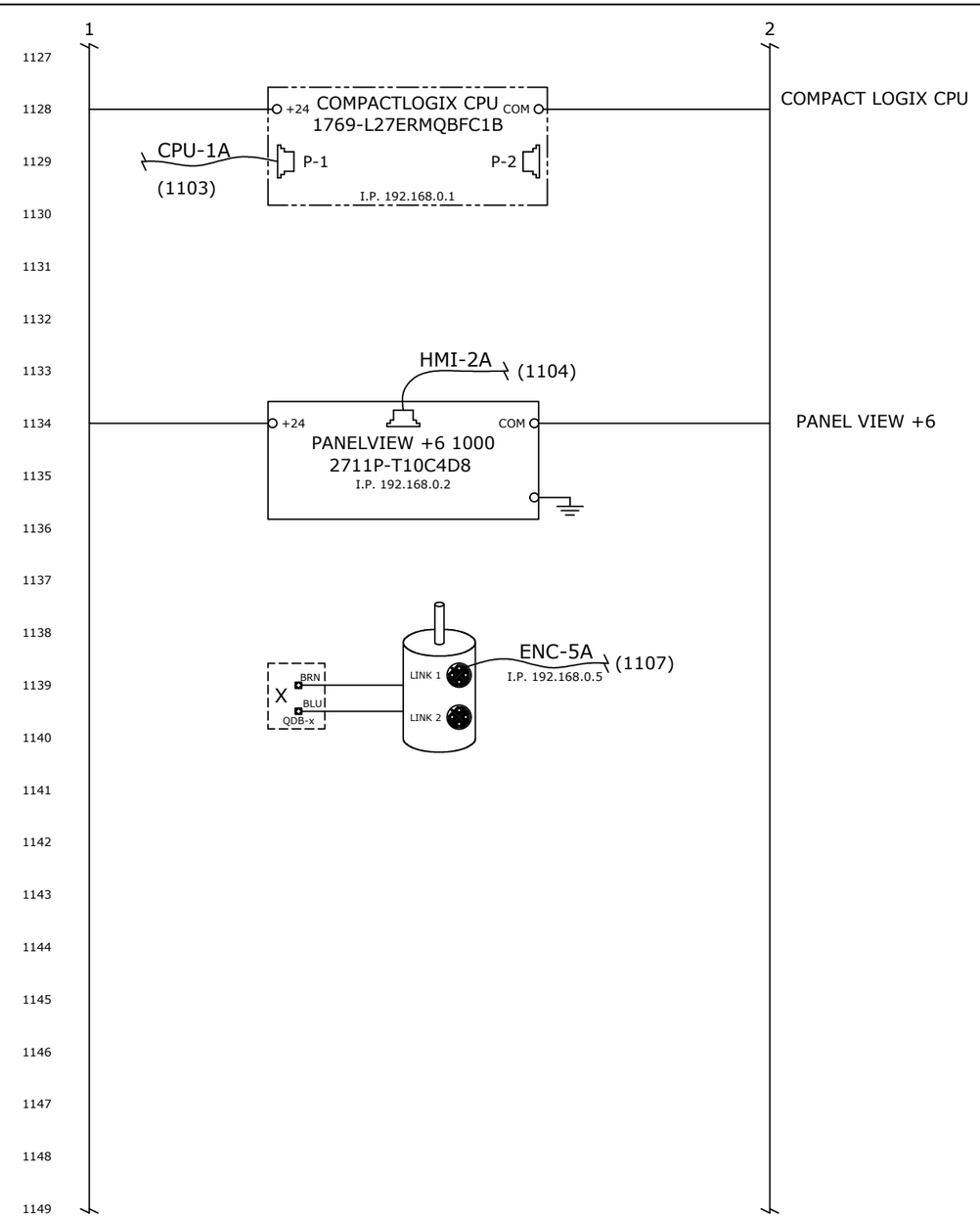

2170 Academy Ave.
Sanger CA. 93657
(559) 875-5563

CUSTOMER: KIMBERLY CLARK		
DATE: 3/4/15	MODEL: 9WM-110-PW	
REVIS'D: -	SERIAL: 5624HG	DRW BY: JT
DESCRIPTION: ELECTRICAL SCHEMATIC DIAGRAM		
LOCATION: MAIN PANEL ETHERNET COMM	PAGE: 11 of 15	DRAWING NO: B70-4327

--- This page intentionally left blank ---

= PHYSICAL UNIT

= OUTSIDE PANEL

2170 Academy Ave.
Sanger CA. 93657
(559) 875-5563

CUSTOMER: KIMBERLY CLARK		
DATE: 3/4/15	MODEL: 9WM-110-PW	
REVIS'D: -	SERIAL: 5624HG	DRW BY: JT
DESCRIPTION: ELECTRICAL SCHEMATIC DIAGRAM		
LOCATION: SPARE	PAGE: 12 of 15	DRAWING NO: B70-4327

M2IA ROBOT END OF ARM TOOLING
EE CONNECTOR LOCATED ON ROBOT ARM

21	RO7	17	24V	13	RI8	9	RI1	5	RO5	1	RO1
22	RO8	18	24V	14	XPPABN	10	RI2	6	RO6	2	RO2
23	0V	19	24V	15	RI5	11	RI3	7	XHBK	3	RO3
24	RI7	20	24V	16	RI6	12	RI4	8	0V	4	RO4

FANUC EE-SDLP CONNECTION CABLE
PART NUMBER: ME-1800-153-015

FIELD JUNCTION BOX JB-1

	TB-1	
RED	1	RO1
PINK	2	RO2
PURPLE	3	RO3
BROWN	4	RO4
YELLOW	5	RO5
GREY	6	RO6
WHT/BLK	7	XHBK
GREEN	8	0V
GRY/PINK	9	RI1
WHT/GRN	10	RI2
BRN/GRN	11	RI3
WHT/YEL	12	RI4
YEL/BRN	13	RI8
BRN/RED	14	XPPABN
GRY/BRN	15	RI5
WHT/PINK	16	RI6
BLUE	17	24V
RED/BLU	18	24V
WHT/BLU	19	24V
BRN/BLU	20	24V
WHITE	21	RO7
BLACK	22	RO8
WHT/RED	23	0V
PINK/BRN	24	RI7
WHT/GRY	25	N/A

PANEL GROUND

VALVE BLOCK ASSYM
DWG: B70-5984 pg 20 of 20

1 WHT — SV2100-5W1U-02N — SV-7
2 GRN — SV2100-5W1U-02N — SV-8
3 YEL
4 GRY
QDB-6

BRN GND BLU
WIRES

SV-7 VAC SOLENOID #1
SV-8 BLOW OFF SOL #1

WHITE
GREEN
BLUE
BROWN
GREEN/YELLOW

= PHYSICAL UNIT
= OUTSIDE PANEL

2170 Academy Ave.
Sanger CA. 93657
(559) 875-5563

CUSTOMER: KIMBERLY CLARK		
DATE: 3/4/15	MODEL: 9WM-110-PW	
REVIS'D: 12/5/14	SERIAL: 5624HG	DRW BY: JT
DESCRIPTION: ELECTRICAL SCHEMATIC DIAGRAM		
LOCATION: Robot 1 EOAT Schematics	PAGE: 13 of 15	DRAWING NO: B70-4327

MOTOR FEEDBACK (MPx-xxxx-M..)

Motor Feedback (MF) Connector

	DESC.	COLOR
1	A+ / Sine+	BLACK
2	A- / Sine-	WHITE/BLACK
3	B+ / Cos+	RED
4	B- / Cos-	WHITE/RED
5	I+ / Index+	GREEN
6	COMMON	WHITE/GREY
7	Encoder Pwr (+9V)	ORANGE
8	COM. CH 3 / S3	WHITE/YELLOW
9	Reserved	N/C
10	I- / Index-	WHITE/GREEN
11	Thermostat	WHITE/ORANGE
12	COM. CH 1 / S1	WHITE/BLUE
13	COM. CH 2 / S2	YELLOW
14	Encoder Pwr (+5V)	GREY
15	Reserved	N/C

IPD, INPUT POWER, K300

DC Bus / AC Input Power (IPD) Connector

TERM	DESC.	COLOR
L1	L1	BLACK (OR YEL)
L2	L2	BLACK (OR ORNG)
L3	L3	BLACK (OR BRN)
PE	Gnd	GREEN (/YELLOW)

MP, MOTOR POWER, K300

Motor Power (MP) Connector

TERM	DESC.	COLOR
W	W	BLUE
V	V	BLACK
U	U	BROWN
PE	Gnd	GREEN (/YELLOW)

BP, BACKUP POWER

Backup Power (BP) Connector

TERM	DESC.	COLOR
+24	+VOLTS	BLUE
-24	-VOLTS	WHITE/BLUE

Quick Disconnect Block Terminations

COLOR	DESC.
WHITE (WH)	Port 1, Pin 4
GREEN (GN)	Port 2, Pin 4
YELLOW (YE)	Port 3, Pin 4
GRAY (GY)	Port 4, Pin 4
PINK (PK)	Port 5, Pin 4
RED (RD)	Port 6, Pin 4
BLACK (BK)	Port 7, Pin 4
VIOLET (VT)	Port 8, Pin 4
BROWN (BN)	Port 1-8, Pin 1 (+24vdc)
BLUE (BU)	Port 1-8, Pin 3 (-24vdc)
GN/YE	Port 1-8, Pin 5 (ground, if used)
	NOTE: Pin 2 is always NOT used

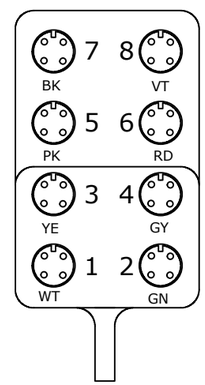

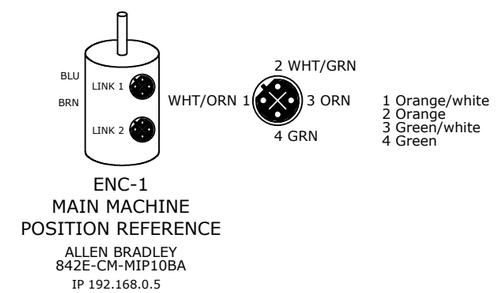

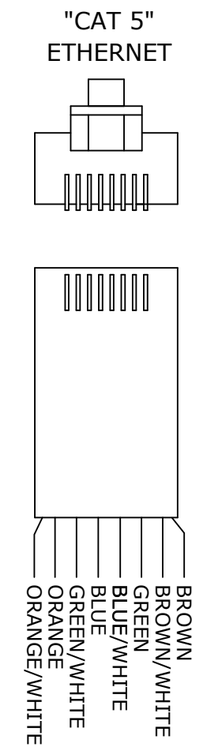

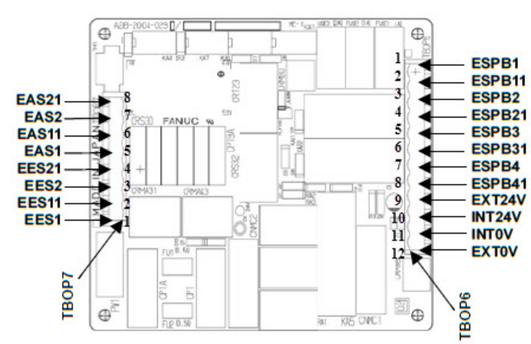

2170 Academy Ave. Sanger CA. 93657 (559) 875-5563	CUSTOMER: KIMBERLY CLARK		
	DATE: 3/4/15	MODEL: 9WM-110-PW	
	REVIS'D:	SERIAL: 5624HG	DRW BY: JT
DESCRIPTION: ELECTRICAL SCHEMATIC DIAGRAM			
LOCATION: RMT PNL	PAGE: 14 of 15	DRAWING NO: B70-4327	

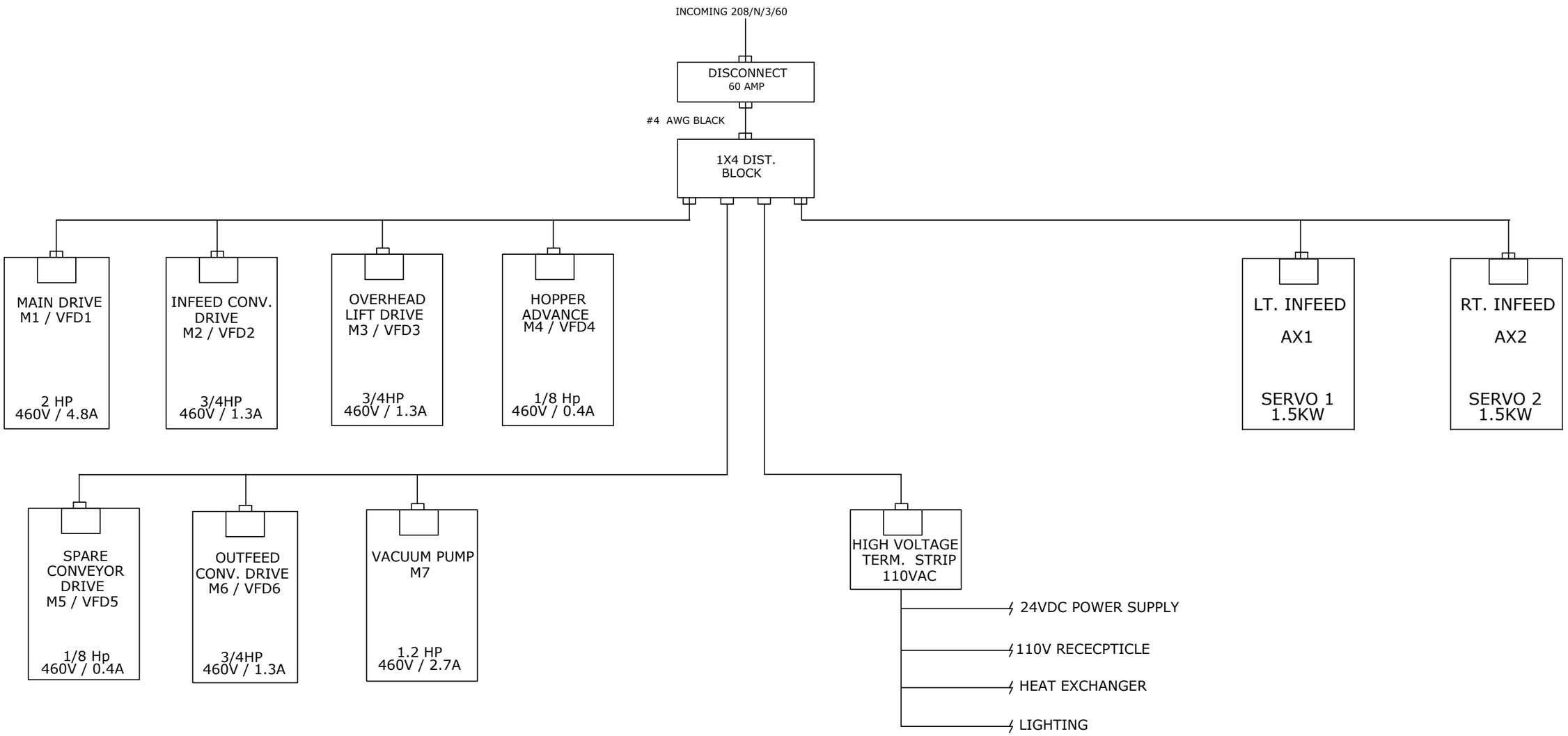

2170 Academy Ave.
Sanger CA. 93657
(559) 875-5563

CUSTOMER: KIMBERLY CLARK		
DATE: 3/4/15	MODEL: 9WM-110-PW	
REVIS'D:	SERIAL: 5624HG	DRW BY: JT
DESCRIPTION: ELECTRICAL SCHEMATIC DIAGRAM		
LOCATION: POWER ONE LINE	PAGE: 15 of 15	DRAWING NO: B70-4327

GLUE MELTER

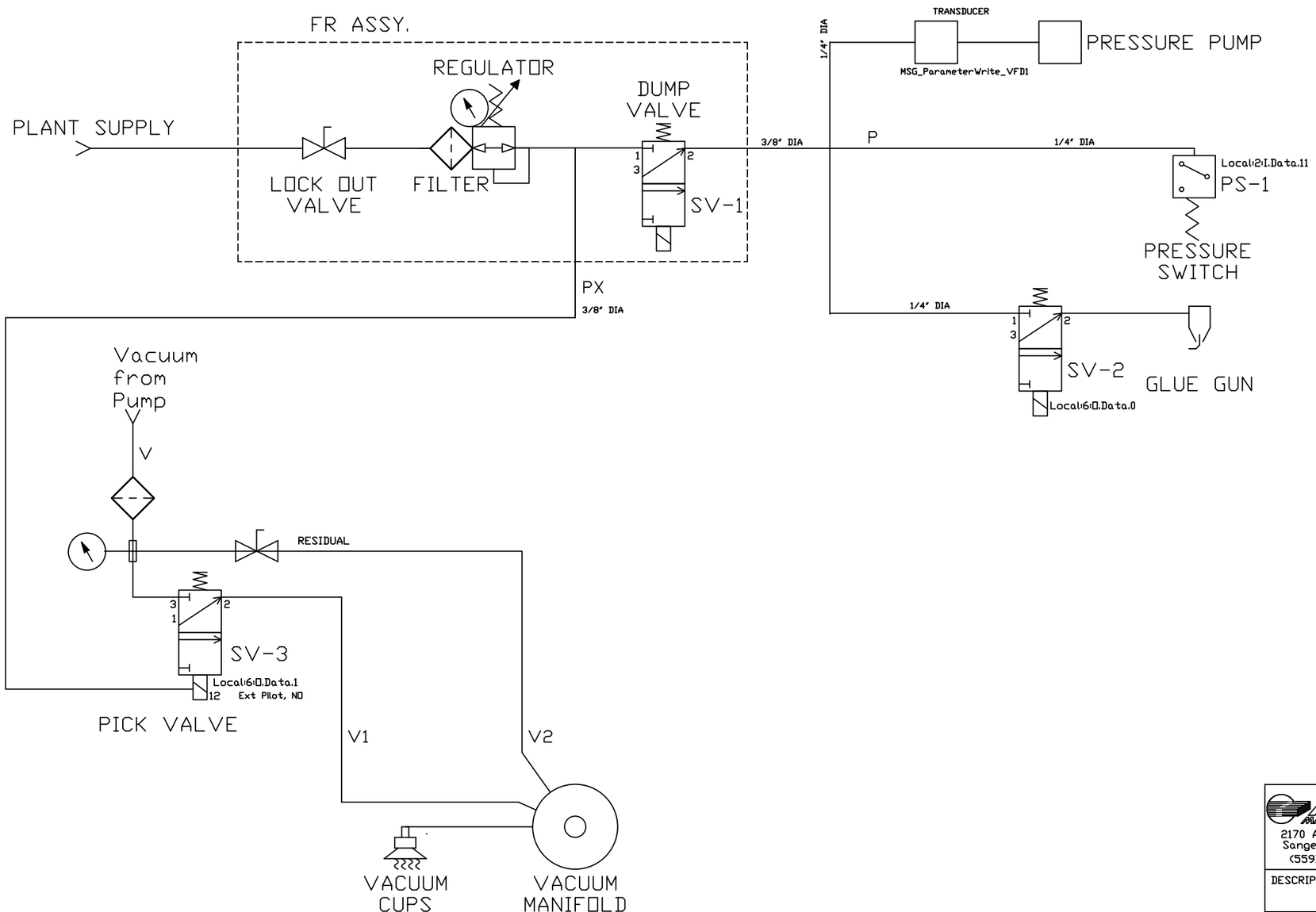

ADCO MANUFACTURING 2170 Academy Ave. Sanger CA. 93657 (559) 875-5563	CUSTOMER ADCO MFG		
	DATE: 1/7/15	MODEL: 12WM-115-WD	
	REVIS'D: –	SERIAL: 5624HG	DRW BY: DLE
DESCRIPTION: PNEUMATIC SCHEMATIC DIAGRAM			
	PAGE: 1 of 1		DRAWING NO: B72-4329

Chapter 8 – Component Literature

This Chapter of the Service Manual contains the third party literature for many of the components of the machine, such as the manuals for the VFD drives and gearboxes. The component literature is not part of this PDF Manual, instead the Component Literature is provided in the Component literature folder included on supplied disk.

Table of Contents

Chapter 8 – Component Literature 8-1

Acme – Power Transformer 8-A

Allen-Bradley – Ethernet Switch, 8000 ..... 8-B

Allen-Bradley – Ethernet Switch, 2000 ..... 8-C

Allen-Bradley – Guard Switch, SensaGuard 8-D

Allen-Bradley – Guard Switch, Rotacam 8-E

Allen-Bradley – Monitoring Safety Relay, MSR138 1.DP 8-F

Allen-Bradley – Photo Eyes 8-G

Allen-Bradley – Proximity Switch, Inductive 8-H

Allen-Bradley – Servo Motor, MPF 8-I

Allen-Bradley – VFD, PowerFlex 525 ..... 8-J

Banner – Emergency Stop 8-K

Becker – Vacuum Pump, VX4.40 ..... 8-L

Habasit – Plastic Chain 8-M

IFM Efector – Pressure Switch 8-N

Joyce Dayton – Machine Screw Jack 8-O

Lube USA – Oil Pump 8-P

Mac Valves – Air Valve 8-Q

Nordgear – Gearmotor, SK12063 ..... 8-R

Nordgear – Gearmotor, SK1S 8-S

Nordson – Freedom Glue Melter 8-T

Nordson – Glue Gun, Mini-Blue 8-U

Nordson – Pressure Transducer 8-V

Noren – Cabinet Cooler 8-W

Reign Power – Power Supply 8-X

R+W – Torque Limiter 8-Y

Stöber – Servo Gearhead 8-Z

Tolomatic – Gearbox, Slide Rite 8-ZA

Turck – Proximity Switch 8-ZB

Turck – Encoder..... 8-ZC

WC Branham – Gearbox, Glide Rite 8-ZD